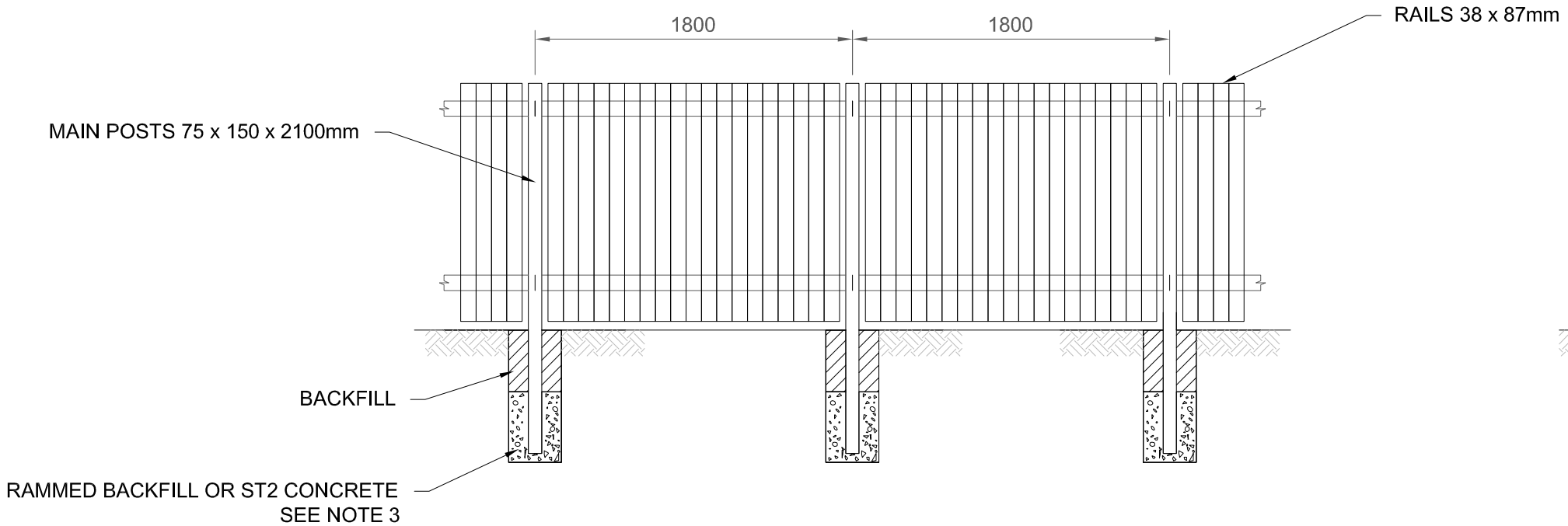

TIMBER POST AND RAIL FENCE TYPE F18

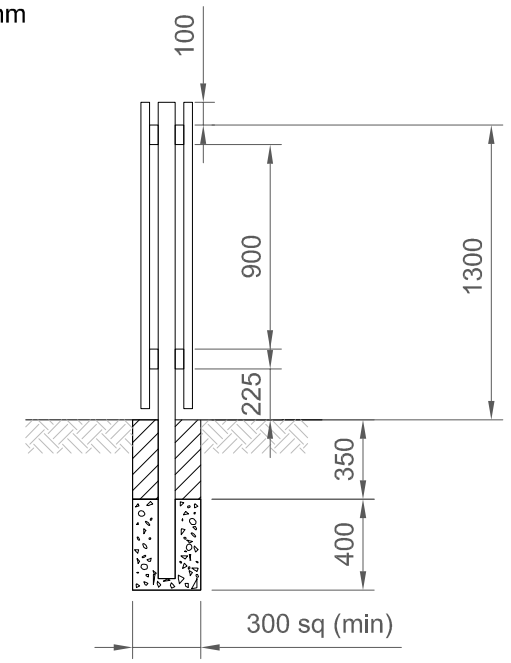

SECTION THROUGH CENTERLINE OF MAIN POSTS

NOTES

1. All dimensions are in millimetres.
2. All posts and struts to be sawn timber.
3. BS 1722 applies unless otherwise stated.
4. Details of posts and connections shall be in accordance with Drawing Nos. M8MFJV/AW/003 F3 and 004 F4.
5. Posts can be supported by rammed backfill or concrete ST2 as required.

CLIENT

TRANSPORT SCOTLAND

An agency of The Scottish Government

PROJECT TITLE

M8 M73 M74
Motorway Improvements

REV	REVISIONS	BY	CHKD	APP'D	DATE

AMENDMENTS

This map is based upon Ordnance Survey material with the permission of Ordnance Survey on behalf of the Controller of Her Majesty's stationery Office (c) Crown copyright 2011. Any unauthorised reproduction infringes Crown copyright and may lead to prosecution or civil proceedings. Scottish Executive Licence number : 100046668 2011.

DESIGN BY:	DM	CHECKED BY:	MJB
DATE:	JAN 10	DATE:	JAN 10
DRAWN BY:	DM	APPROVED BY:	WW
DATE:	JAN 10	DATE:	JAN 10
DRAWING STATUS	CONTRACT		

ENGINEER

mouchel FAIRHURST

IN ASSOCIATION WITH

SIAS amec

DRAWING TITLE

Accommodation Works
Timber Post and Rail Type F18

SCALE @ A3	DRAWING NO	REV
NTS	M8MFJV/AW/018	–