SCOTTISH MINISTERS' REQUIREMENTS

SCHEDULE 1

CONTENTS **Page No.**

PART 1 – CONTRACT SCOPE		**1**
1.	**CLAUSE 1:DEFINITIONS AND INTERPRETATION**	**1**
1.1	Definitions	1
1.2	Interpretation	25
2.	**CLAUSE 2: SCOPE OF CONTRACT, OPERATING COMPANY OBLIGATIONS, CONTRACT ADMINISTRATION AND APPLICABLE LAW**	**28**
2.1	Scope of Contract	28
2.2	Operating Company Obligations	29
2.3	Operating Company Knowledge	29
2.4	Delegation of Statutory Functions	30
2.5	Arrangements for the Administration of this Contract	30
2.6	Assignation and Subcontracting	31
2.7	Giving of Notices and Payment of Fees	32
2.8	Legislation	32
2.9	Scots Law to Apply	33
2.10	Language	33
2.11	Notices	33
2.12	Conflict of Interest	34
2.13	Operations Commencement Date 1, Operations Commencement Date 2, Commencement of Service Date 1 and Commencement of Service Date 2	35
3.	**CLAUSE 3: CONTRACT DOCUMENTS**	**35**
3.1	Interpretation of Contract Documents	35
3.2	Provision of Documents	36
3.3	Drawings and Information	36
4.	**CLAUSE 4: CONTRACT OBLIGATIONS**	**37**
4.1	General Obligations	37
4.2	Operating Company Staff	38
4.3	Operating Company Responsibilities	38
4.4	Addition and Removal of Things to and from the Unit	39
4.5	Design, Design Checks and Certification	39
4.6	Sureties	41
4.7	Inspection of the Unit	42
4.8	Operations to the Satisfaction of Scottish Ministers	42
4.9	Setting Out	42
4.10	Safety and Security	42
4.11	Operating Company's Superintendence	43
4.12	Clearance During and on Completion of Operations	43
4.13	Discrimination	44
4.14	Motorway Passes and Keys	44
5.	**CLAUSE 5: ACCESS, INSPECTION PROCESS, COMPLETION OF ORDERS AND DEFECTS CORRECTION**	**45**
5.1	Access and Provision of Facilities	45
5.2	Rate of Progress	45
5.3	Completion Certificates and Notification of Completion of Schemes	45
5.4	Examination of Work before Covering Up	46

5.5	Operating Company to Determine Cause of Defects.	47
5.6	Urgent Repairs	47
5.7	Removal of Improper Work and Materials	48
5.8	Correction of Defects	49
5.9	Defects Correction Certificate	49
5.10	Non-Conformance Liability Period	50
5.11	Removal of Operating Company's Employees	50
PART 2 – PERIODS AND PROGRAMMES		**52**
6.	**CLAUSE 6: PERIODS AND PROGRAMMES**	**52**
6.1	Mobilisation Period 1	52
6.2	Mobilisation Period 2	53
6.3	Execution of Operations	54
6.4	Preparation of Programmes	55
6.5	Revision of Programmes	55
6.6	Methods	55
6.7	Scottish Ministers' Consent	55
PART 3 – ORDERS, EXTENSIONS OF TIME, MEASUREMENT AND PAYMENT PROVISIONS		**56**
7.	**CLAUSE 7: BIDS, SCHEMES, ORDERS AND THRESHOLD VALUES**	**56**
7.1	General	56
7.2	Orders, Schemes, Threshold Values, Bids	56
7.3	Commencement and Completion of Schemes and Times of Working	59
7.4	Cancellation of Orders	60
8.	**CLAUSE 8: EXTENSION OF TIME PROVISIONS**	**60**
8.1	Extension of Time for Completion of Operations for any Scheme within an Order	60
9.	**CLAUSE 9: MEASUREMENT PROVISIONS**	**61**
9.1	Measurement	61
9.2	Measurement of Operations Executed	62
10.	**CLAUSE 10: VALUATION AND PAYMENT PROVISIONS**	**63**
10.1	Valuation of Operations	63
10.2	Payments to Sub-Contractors	66
10.3	Payments under this Contract	66
10.4	Prompt Payment	71
10.5	Overpayment	72
10.6	Money Recoverable under other Contracts	72
10.7	Contract Price Fluctuations	72
10.8	Additional Payments and Claims	73
10.9	Valuation of Claims	75
10.10	On-Account Payments	76
10.11	Scheme Completion Date and Scheme Closure Date	76
11.	**CLAUSE 11: PROPERTY IN MATERIALS AND PLANT AND VESTING OF GOODS AND MATERIALS AND CARE OF PROPERTY BELONGING TO THE SCOTTISH MINISTERS**	**77**
11.1	Property in Materials and Plant	77
11.2	Vesting of Goods and Materials not on the Unit	79
11.3	Care of Property Belonging to the Scottish Ministers	81
11.4	The Premises	81

PART 4 – INDEMNITIES AND INSURANCE **82**

12. CLAUSE 12: CARE OF THE UNIT, OPERATIONS, INDEMNITY AND INSURANCE **82**
12.1 Care of the Unit and the Operations 82
12.2 Damage to Persons and Property 83
12.3 Insurance Generally 84
12.4 Underwriting Information, Placing Documents, Insurance Policies and Copies 84
12.5 Rights of Subrogation, Non-Vitiation, Changes to Policy Provisions, Waiver of Disclosure Obligation and Notice of Cancellation 85
12.6 Failure to Provide Suitable Evidence of Insurance 86

PART 5 – MANAGEMENT SYSTEM AND CHANGE PROPOSALS **88**

13. CLAUSE 13: MANAGEMENT SYSTEM **88**
13.1 Management System 88
13.2 Failure by Operating Company to Perform its Obligations 89
13.3 Application to Subcontracts 90
13.4 Laboratories and Testing Schedules 91
13.5 Operating Company Weekly Non-Conformance Reports 93
14. CLAUSE 14: OPERATING COMPANY PROPOSALS FOR CHANGE TO THE SCOTTISH MINISTERS' REQUIREMENTS **93**
14.1 Process 93

PART 6 – DEFAULT, TERMINATION AND FRUSTRATION **96**

15. CLAUSE 15: DEFAULT AND STEP-IN RIGHTS PROVISIONS **96**
15.1 Rights on Default without Prejudice to Termination Rights 96
15.2 Remedial Notices 96
15.3 Notices of Non-Conformance 96
15.4 Scottish Ministers' Step-in Rights – Defaults 97
15.5 Lane Occupation Charges 98
15.6 Scottish Ministers' Redress – Failure to Comply with Audit Requirements 99
15.7 Recovery of Scottish Ministers' Costs 99
15.8 No Waiver 99
15.9 Other Rights 100
16. CLAUSE 16: TERMINATION PROVISIONS **100**
16.1 Termination of this Contract 100
17. CLAUSE 17: FRUSTRATION AND WAR PROVISIONS **103**
17.1 Frustration 103
17.2 War 103
17.3 Removal of Constructional Plant 103
17.4 Payment on Abandonment of Operations 103

PART 7 – DISPUTES RESOLUTION **105**

18. CLAUSE 18: DISPUTES RESOLUTION **105**
18.1 Disputes 105
18.2 Adjudication 106
18.3 Arbitration 106

PART 8 – STATUTORY, CONTRACTUAL AND LEGAL REQUIREMENTS **108**

19.	**CLAUSE 19: STATUTORY, CONTRACTUAL AND LEGAL REQUIREMENTS**	**108**
19.1	New Roads and Street Works Act 1991	108
19.2	Royalties	108
19.3	Interference with Adjoining Land and Properties	108
19.4	Avoidance of Damage to Roads	109
19.5	Fossils and Antiquities	110
19.6	Operations within Government or Local Authority Establishments	110
19.7	Data Protection Act – Operating Company's Indemnity	110
19.8	Non Corrupt Practices	111
19.9	Privacy of Information	113
19.10	Secrecy	113
19.11	Intellectual Property Rights and Ownership of the Information	113
19.12	Freedom of Information	116
20.	**CLAUSE 20: THE CONSTRUCTION (DESIGN AND MANAGEMENT) REGULATIONS**	**117**
20.1	The Construction (Design and Management) Regulations	117
PART 9 – TAX MATTERS INCLUDING VALUE ADDED TAX		**119**
21.	**CLAUSE 21: TAX PROVISIONS**	**119**
21.1	Tax Matters	119
21.2	Value Added Tax	119
21.3	Construction Industry Scheme	120
PART 10 – TUPE REGULATIONS AND EMPLOYEES AND PENSION MATTERS		**122**
22.	**CLAUSE 22: TRANSFER OF UNDERTAKINGS**	**122**
22.1	Transfer of Undertakings	122
22A	**CLAUSE 22A- Pension Matters**	**128**
22A.1	Operating Company to become an Admission Body	128
22A.2	Liability for underfunding prior to Commencement of Service Date 1	128
22A.3	Admission Agreement	128
22A.4	Indemnity for a breach of the Admission Agreement	129
22A.5	Indemnity or bond	129
22A.6	Right of Set Off	129
22A.7	Liabilities of the Parties and Payments relating to Pensions	129
22A.8	Debt arising as a result of cessation of participation in the LGPS	130
22A.9	Liability for Costs	130
22A.10	Pension issues on Expiry or Termination	130
22A.11	Discretionary Benefits	131
22A.12	New Employees Pension Scheme	131
22A.13	Operating Company and contractors and sub contractors and Clause 22A	132
PART 11 – SPECIAL REQUIREMENTS OF RELEVANT ORGANISATIONS		**133**
23.	**CLAUSE 23: SPECIAL REQUIREMENTS OF RELEVANT ORGANISATIONS**	**133**
23.1	Relevant Organisations	133
23.2	Compliance with Relevant Organisation's Requirements	134
SCHEDULE 1 ANNEX 1 – ADJUDICATION PROCEDURE		**135**

SCHEDULE 1 ANNEX 2 – FORM OF MODEL BOND AND UNDERTAKING **140**

SCHEDULE 1 ANNEX 3 – LANE OCCUPATION CHARGES **142**

SCHEDULE 1 ANNEX 4 – CONTRACT PRICE FLUCTUATIONS **143**

SCHEDULE 1 ANNEX 5 – INSURANCE REQUIREMENTS **154**

SCHEDULE 1 ANNEX 6 – FLOWCHARTS **161**

SCHEDULE 1 ANNEX 7 – CLAIM NOTIFICATION FORMERROR! BOOKMARK NOT DEFINED.

SCOTTISH MINISTERS' REQUIREMENTS

SCHEDULE 1

PART 1 – CONTRACT SCOPE

1. CLAUSE 1:DEFINITIONS AND INTERPRETATION

1.1 Definitions

1.1.1 In this Contract the following words and expressions have the meanings hereby assigned to them except where the context otherwise requires.

"Access System" means a permanent or temporary moveable access gantry, deck shuttle, lift, platform or suspended cradle together with associated runway beams, supports, powered winching or hauling equipment, running gear and associated fixings.

"Accident Investigation and Prevention Report" means a report, prepared by the Operating Company, containing proposals for remedial actions to address identified causes of accidents.

"Actual Contribution Amount" means the contribution set out in a rates and adjustments certificate issued to the Operating Company (and or any relevant contractor or sub-contractor) pursuant to either regulation 60 or regulation 62 of the LGPS Regulations.

"Additional Pension Costs" means an increase in any liability to contribute to the LGPS imposed on the Operating Company (or any relevant contractor or sub-contractor) as a consequence of:

(i) the exercise by the Operating Company of any discretion under the LGPS Regulations or the LGPS (Compensation) Regulations to permit any of the Pensionable Authority Employees to retire before such Pensionable Authority Employees' normal pension age (as defined in Schedule 1 of the LGPS Regulations),

(ii) any augmentation of benefits under the LGPS for any of the Pensionable Authority Employees,

(iii) any redundancy of any of the Pensionable Authority Employees which gives such employee the right to bring benefits into payment under the LGPS in accordance with regulation 29(7) of the LGPS Regulations,

(iv) any increases in the pay (as defined in the LGPS Regulations) of Pensionable Authority Employees in excess of the rate of increases in pay assumed in the actuarial valuation prepared by the actuary in accordance with regulation 60 of the LGPS Regulations immediately preceding such actual increases,

(v) any benefits which come into payment pursuant to regulation 34 (Early payment of retirement pension on ill-health grounds: active members) of the LGPS Regulations, and

(vi) any waiver of the requirement for any of the Pensionable Authority Employees to contribute to the LGPS.

provided always that should any of the events set out in the limbs (i) to (vi) above be at the instigation of the Scottish Ministers then that event shall not constitute an Additional Pension Cost.

"Adjudicator" means the person referred to in Schedule 1, Annex 1.

"Administering Authority" means The City of Edinburgh Council, a local authority constituted under the *Local Government etc (Scotland) Act 1994* and having its principal offices at Waverley Court, 4 East Market Street, Edinburgh EH8 8BG as the administering authority to the Lothian Pension Fund within the LGPS regulated in Scotland.

"Admission Agreement" means an agreement entered into in accordance with Schedule 2 Part 2 of the LGPS Regulations by the Administering Authority and the Operating Company and or any relevant contractor or sub-contractor (as appropriate) and a template for which will be provided by the Scottish Ministers.

"Admission Body" means an admission body for the purposes of Schedule 2 Part 2 of the LGPS Regulations.

"Agreement" means the executed and legally binding document that witnesses the agreement in writing of the Parties for the Term Contract for Management and Maintenance of the Scottish Trunk Road network - Forth Bridges Unit.

"Airwave" means the proprietary encrypted digital radio communications system utilised for dedicated communication between licensed Emergency Services and other licensed organisations.

"Annual Period" means the period of one year from 00.00 hours on the 1 April each year to 24.00 hours on the 31 March of the following year, except for the first Annual Period which is the period from 00.00 hours on Commencement of Service Date 1 to 24.00 hours on the 31 March of the following year and the last Annual Period which is the period from 00.00 hours on the 1 April of the preceding year to 24.00 hours on the Service End Date.

"Annual Road Safety Review Report" means an annual report, prepared by the Operating Company, containing a programme of proposed road safety initiatives planned to contribute to achieving the Scottish Government's casualty reductions targets.

"Area RAUC" means the Area Roads and Utilities Committee of any of the four Area RAUCs set up under the aegis of RAUC(S) that provides a forum for discussion on issues relevant on an area basis and report to RAUC(S).

"Assignation of Rights Agreement" means an assignation of the Scottish Ministers' rights to pursue a claim in respect of Damage to Crown Property in the form contained in Schedule 4 Part 4, Annex 4.4/E.

“Associated Company” means a company which is a subsidiary or holding company of the Operating Company or a subsidiary of the holding company of the Operating Company, where “subsidiary” and “holding company” have the meanings given in section 1159 of the *Companies Act 2006.*

"Auditable Section" means a defined section of the Unit for the purpose of audit, inspection and measurement and includes:

(i) for dual carriageway (including motorway) routes: all travel lanes of the route operating in one direction over a length of 500 metres, together with all other assets of the Unit associated with such 500 metre length of the route between the centreline of the dual carriageway (including motorway) and the boundary of the Unit.

(ii) for single carriageway routes: all travel lanes of the route over a length of 500 metres, together with all other assets of the Unit associated with such 500 metre length of the route between the boundaries of the Unit.

"Automated Diary Facility" means a web-based software application supplied by the Scottish Ministers to the Operating Company for the input, editing and dissemination of information on all planned roadworks, traffic management, Lane, carriageways or full road closures, Lane Occupations and events likely to cause traffic delays or disruption on the Unit.

"Base Index Figure" has the meaning given to it in Clause 10.7.2.

"Base Lending Rate" means the UK base rate published by the Royal Bank of Scotland, as varied from time to time.

"Bid" means the submission made by the Operating Company in accordance with the processes set out within Transport Scotland's *Annual Process for Roads Structural Maintenance* or the annual cycle set out in Schedule 4 Part 1, as appropriate, to the Director in order to seek his consent for inclusion of a Scheme within the one and three year programmes.

"Bond and Undertaking" means the bond and undertaking in the form set out in this Schedule 1 Annex 2, to be provided in respect of the Operating Company to the Scottish Ministers.

"Bridge Assessment" has the meaning given to it in the *Design Manual for Roads and Bridges: BD 21:The Assessment of Highways Bridges and Structures*.

"Carbon Management System" means Transport Scotland's computerised system for calculating and managing greenhouse gas emissions.

"Carbon Management System Annual Account" means the system used by Transport Scotland to record greenhouse gas emissions from data supplied by the Operating Company using the Carbon Management System Road Infrastructure Projects Tool and the Carbon Management System Operational Data Templates.

"Carbon Management System Road Infrastructure Projects Tool" means Transport Scotland's standalone MS Excel workbook tool used by the Operating Company to record material quantities from larger schemes, as well as transport distances and on-site fuel consumption to derive a ‘project’ specific footprint all as required by Schedule 5 Part 8. This tool is used to return the collated information to Transport Scotland who will then update the Carbon Management System Annual Account with the information provided.

"Carbon Management System Operational Data Templates" means the MS Excel worksheets which the Operating Company completes on a monthly/quarterly basis with utility and fuel use data for its various offices, depots and vehicle fleets.

"Carbon Management System Data Template for Contractors" means the individual MS Excel workbooks used by the on-site contractor to record and collate information

on material quantities delivered to site, transport distances and on-site fuel consumption, before the data is transferred to the Carbon Management System Road Infrastructure Projects Tool.

"Category 1 Defect" means a Defect that necessitates prompt attention because it presents:

(i) an immediate or imminent hazard, or

(ii) a risk of rapid structural deterioration to the affected element.

"Category 2 Defect" means any Defect which is not a Category 1 Defect.

"CDM Regulations" means the *Construction (Design and Management) Regulations 2007* and the *Approved Code of Practice issued from time to time by the Health and Safety Executive*.

"Central Office" means the Operating Company's central office and which shall, where the context requires, includes the interim central office both to be established and located as referred to in Schedule 5 Part 7.

"Certificate" means any document that formally attests the fulfilment of requirements of this Contract.

"Certificate of Completion" means such a certificate issued in connection with a Works Contract.

"Checker" means the organisation appointed by the Operating Company and previously consented to by the Director in writing to undertake the checks required under Schedule 6 Part 4. Such organisation shall be independent of the Designer, the organisation to which the Designer belongs or is a part of, the Operating Company and or any associated companies.

"Claim Notification" means the notice in writing to the Scottish Ministers by the Operating Company of an intention to claim additional payment in accordance with the provisions of Clause 10.8.2.

"Commencement of Service Date 1" means the date notified by the Scottish Ministers in accordance with Clause 2.13 and relates to Network 1.

"Commencement of Service Date 2" means the date notified by the Scottish Ministers in accordance with Clause 2.13 and relates to Network 2.

"Conditions of Contract" means this Schedule 1 unless the context demands otherwise.

"Confirmation of Oral Order" means a retrospective Order raised using the contract control and management function of the Integrated Roads Information System in response to an oral Order raised by the Director.

"Consolidated Operations Instruction" means an Operations Instruction raised by the Operating Company in order to undertake a number of Operations related to different Scheme Identifiers at the same location.

"Construction phase plan" means the plan prepared by virtue of the CDM Regulations.

"Constructional Plant" means all appliances and things required for carrying out the Operations but does not include materials or other things intended to form or forming part of the Unit.

"Construction Industry Scheme" means the construction industry scheme under Chapter 3 of Part 3 of the *Finance Act 2004*.

"Contemporary Records" means those Records to be produced, created maintained or modified by the Operating Company in accordance with the requirements of this Contract.

"Contract" has the meaning given in the Agreement.

"Contract Administrator" means the Engineer and or Project Manager and or Supervisor or equivalent as stated in the form of Works Contract used.

"Contract Period" means the period between Operations Commencement Date 1 and the expiry of the Non-Conformance Liability Period.

"Contract Personnel" means employees and workers of the Operating Company (and or sub-contractors of any tier of the Operating Company) employed or engaged in the performance of the Operations from time to time.

"Contract Personnel Information" means any information about the employment and the employment terms and conditions of Contract Personnel requested by the Scottish Ministers.

"Contract Price" means the sum of money set out in, or calculated in accordance with, this Contract properly payable to the Operating Company in accordance with the provisions of this Contract in respect of its performance of this Contract.

"Contract Price Fluctuation" means the index linked adjustment to the Schedule of Rates and Prices applied to payment to take account of inflation.

"Core Management Team" means the core management team appointed by the Operating Company and includes any additions to and or replacements of any members of such team as subsequently agreed under the terms of this Contract.

"Core Operations" means the activities, duties, obligations and responsibilities of the Operating Company set out in this Contract that are not Ordered Operations.

"Core Operations Closure Date" means the date logged into the contract control and management function of the Integrated Roads Information System as the date on which all amounts for the relevant Core Operation for the preceding Financial Year have been included in a Statement and after which no further amounts will be claimed by the Operating Company.

"Critical Incident" has the meaning given to it in Schedule 7 Part 3.

"Crown Property" means everything that is part of the Unit.

"Current Index Figure" has the meaning given to it in Clause 10.7.2.

"Damage to Crown Property" means any damage caused by the actions, omissions or negligence of a third party such damage including without restriction damage that:

(i) reduces the lifespan of,

(ii) moves,

(iii) impairs the usefulness of, or

(iv) alters the appearance of

Crown Property.

"Data Capture Device" means any portable electronic device that can be used by the Operating Company for entry and storage of data in digital form.

"Default" means:

(i) any breach of the obligations of either party to this Contract (including but not limited to any breach of any undertaking or warranty given under or in terms of this Contract),

(ii) any failure to perform or the negligent performance of any obligation under this Contract,

(iii) any breach of any Legislation, or

(iv) any negligence or negligent or fraudulent misstatement or any other default,

in all cases by either Party, its employees, agents, representatives, contractors, sub-contractors and or suppliers of whatever tier.

"Defect" means any defect or fault on the Unit.

"Defects Correction Period" means the period for correction of any Defects in a Scheme, commencing on the Scheme Completion Date of that Scheme and expiring on the earlier of:

(i) the date falling 52 weeks later, and

(ii) the Service End Date.

"Defects Correction Operations" means any work to correct Defects.

"Design" means the following:

(i) all work necessary for the preparation and completion of calculations and drawings,

(ii) carrying out all procedures and checks,

(iii) certification,

(iv) preparation of processes and specifications, and or

(v) all other information and documentation required,

to enable activities to be undertaken as stipulated by this Contract and from which the Operations or Works are programmed, procured, constructed and or executed.

"Design Element" means a part of a Design.

"Designer" means the party preparing a Design or a Design Element.

"Detailed Inspection" means the inspection so referred to in Schedule 7 Part 1.

"Director" means the Director of Transport Scotland Trunk Road and Bus Operations Directorate or any other person named by the Scottish Ministers from time to time to act on behalf of the Scottish Ministers.

"Director's Management System" means any system used by the Director in the management of a Trunk Road.

"Dispute" means a difference or dispute of any nature between the Scottish Ministers and the Operating Company arising out of or concerning this Contract.

"Disruption Risk Management Plan" means the document prepared and maintained by the Operating Company to record the activities required to manage all identified risks of disruption to the Unit.

"Disruption Risk Site" means a site where there is a history of or potential for unplanned disruption in the form of a Lane, carriageway or full road closure or some other temporary restriction to normal movement, excluding disruption due to congestion.

"Drawings" means the drawings:

(i) prepared by the Operating Company and or its Designer in pursuance of or in connection with a Design or otherwise together with any subsequent modification of such drawings received by the Scottish Ministers, and

(ii) also such other drawings as may from time to time be provided by the Scottish Ministers or the Operating Company.

"Effective Value" has the meaning given to it in Clause 10.7.2.

"Electronic Copy" means a copy of any document provided or received by e-mail, internet, on a CD-ROM or DVD-ROM or on a USB memory stick or portable hard drive, in a standard software format, or a specified software format, in accordance with the provisions of this Contract in a format acceptable to, and confirmed in writing by, the Director.

"Emergency Services" means the ambulance service, police, fire and rescue service, maritime and coastguard agency.

"Engineer" means the person consented to by the Director as Contract Administrator in accordance with Clause 4.11.2.

"Estimated Bid Value" means the estimate of the value of a Scheme submitted with the Bid and will be the sum of the Estimated Construction Value and applicable Design fees.

"Estimated Construction Value" means the estimated value of all construction Operations and or Works for a Scheme. The Estimated Construction Value shall not include Design.

"FCBC" means the Forth Crossing Bridge Constructors who are contractor for the FRC Principal Contract.

"FRC Principal Contract" means the contract entered into between The Scottish Ministers and FCBC

"FETA" means the Forth Estuary Transport Authority which entity is, until Commencement of Service Date 1, and, from Commencement of Service Date 1 was historically, responsible for the maintenance and operation of the Forth Road Bridge.

"Final Index Figure" has the meaning given to it in Clause 10.7.2.

"Final Tender Submission" means the submission made by the Operating Company as a participant in response to the invitation to submit final tender and the invitation documents in the procurement of this Contract.

"Financial Year" means Transport Scotland's financial year, which starts on 01 April and ends on the following 31 March.

"Forth Bridges Forum" means an organisation whose membership comprises Transport Scotland, Network Rail, City of Edinburgh Council, Fife Council, West Lothian Council, Historic Scotland, Visit Scotland and other bodies who may be invited to join by the Director and which was established to ensure that local stakeholders' interests remain at the core of the management and maintenance of the Principal Crossings. In addition, it provides a mechanism for the collective promotion of the Queensferry Crossing, Forth Road Bridge and Forth Rail Bridge.

"Forth Road Bridge" means the existing Structure spanning the Firth of Forth comprising the suspension bridge and approach viaducts between and including the north and south abutments.

"Forth Road Bridge Maintenance Database**"** means the database historically compiled and maintained by FETA for the management and logging of defects on, and repairs to, the Forth Road Bridge.

"Further Detailed Direction" means the response raised within the contract control and management function of the Integrated Roads Information System by the Director to a Further Detailed Enquiry raised by the Operating Company in respect of Orders previously issued or an instruction from the Director in respect of a previously issued Order.

"Further Detailed Enquiry" means an enquiry raised within the contract control and management function of the Integrated Roads Information System by the Operating Company to the Director in respect of Orders previously issued.

"General Inspection" has the meaning given to it in the *Design Manual for Roads and Bridges* as added to and amended by Schedule 7 Part 6 and Schedule 7 Part 7.

"Hazard Notice" means a notice issued to the Operating Company by the Performance Audit Group identifying a situation which represents an immediate hazard requiring action by the Operating Company.

"HB" means type HB loading as defined in the *Design Manual for Roads and Bridges: BD 37/01: Loads for Highway Bridges*.

"Historical Records" means those records held by:

(i) any previous operating company for any part of the Unit and that such previous operating company is contractually required to hand over to the Operating Company,

(ii) FETA,

(iii) FCBC and that FCBC is contractually required to hand over to the Scottish Ministers, FETA, or the Operating Company, and

(iv) Any other authority having responsibility for any part of the Unit prior to Commencement of Service Date 1 and who is required to hand over records for such part of the Unit.

"Holding Company" means a company that:

(i) holds the majority of voting rights in a company,

(ii) is a member of a company and has the right to appoint or remove a majority of its board of directors,

(iii) is a member of a company and controls alone, or under an agreement with other members, a majority of the voting rights in that company.

"Incident" means an unplanned event on or near the Unit that has given rise to, or is likely to give rise to, disruption to traffic flow, harm to the environment or harm to the safety or welfare of road users, the public, or those working on or close to the Unit.

"Incident Response" means all operational activities undertaken by the Operating Company to co-ordinate, direct and execute an effective response after identification or notification of an Incident.

"Incident Response Operations" means all operational activities undertaken by the Operating Company to execute an effective response after identification or notification of an Incident.

"Incident Response Plan" means a written plan containing the Operating Company's arrangements for executing the Incident Response Operations and Incident Response, including details of Incident Response Resources, roles and responsibilities and communication arrangements.

"Incident Response Resources" means personnel, equipment, supplies, facilities and other resources utilised by the Operating Company to execute the Incident Response Operations.

"Incident Support Units" means all Operating Company's vehicle and personnel responding to Incidents occurring on the Trunk Road network outwith the Trunk Road Incident Support Service geographical coverage areas and on all Trunk Road Incident Support Service routes as required.

"Information Acts" has the meaning given to it in Clause 19.12.1.

"Information and Communication Technology System Plan" means the plan to be prepared by the Operating Company as referred to in Schedule 5 Part 2.

"Initial Service End Date" means the period of 5 years from Commencement of Service Date 1.

"Insolvency Event" means the occurrence of one (or more) of the following to a Relevant Entity:

(i) where a Relevant Entity is a company or a limited liability partnership:

(a) the appointment of an administrator pursuant to the *Insolvency Act 1986* (which for the purpose of this definition is called the "Act"), or the lodging or filing with any court of a notice of intention to appoint an administrator in accordance with the Act, or an application is made to any court for the appointment to it of an administrator,

(b) a judicial factor, a receiver, an administrative receiver or a receiver and manager is appointed in respect of it, or in respect of the whole or any part of its assets, business or undertaking.

(c) a provisional liquidator, interim liquidator or liquidator is appointed to it:

(a) a petition is presented to a court for its winding up,

(b) a resolution of its directors or members (or any class of its members) for its winding up, or for the taking of any steps with a view to the appointment to it of an administrator, liquidator, receiver, administrative receiver or judicial factor is proposed or passed, or

(c) any steps are taken by any party (including the Registrar of Companies) to have it struck off the Register of Companies.

(ii) where a Relevant Entity is a partnership or limited partnership:

(a) a petition is presented to a court for its sequestration or the sequestration of any of its partners,

(b) an interim trustee, or trustee in sequestration is appointed to it or any of its partners,

(c) a bankruptcy order is made against it or against any of its partners,

(d) a petition is presented at any court seeking that a bankruptcy order be made against it or any its partners, or

(e) it is dissolved or wound up, whether pursuant to any provision of the *Partnership Act 1890* or the *Limited Partnership Act 1907*, or otherwise.

(iii) without prejudice to the generality of the foregoing) in any case when:

(a) a Relevant Entity it is deemed unable to pay its debts as they fall due (as defined in section 123 of the *Insolvency Act 1986*),

(b) a Relevant Entity enters into or proposes any composition or arrangement (whether formal or informal) with or for the benefit of its creditors (including but not limited to a company voluntary arrangement, scheme of arrangement, trust deed or individual voluntary arrangement),

(c) any steps are taken by a creditor to enforce any security over the assets (or any part thereof) of a Relevant Entity,

(d) a Relevant Entity ceases to or threatens to cease to carry on all or a material part of its business or operations,

(e) diligence or other analogous process is levied on any part of the property of a Relevant Party,

(f) a judgment, order or award is granted against a Relevant Entity,

(g) proceedings are instituted in respect of a Relevant Entity seeking a judgement of insolvency or bankruptcy or any other relief under any bankruptcy or insolvency law, or other similar law affecting creditors' rights,

(h) any event corresponding to, or analogous with, those specified above, occurs in respect of a Relevant Entity under the law of any relevant jurisdiction (including, but not limited to, any of

the insolvency proceedings listed in Annexes A or B to the *Council Regulation (EC) No.1346/2000 of 29 May 2000* (which for the purposes of this definition is called the “Regulation") or the appointment of any person to a Relevant Entity in any of the offices listed in Annex C to the Regulation),

(i) a Relevant Entity takes any action in furtherance of, or indicating its consent to, approval of, or acquiescence in, any of the foregoing.

"Integrated Roads Information System" means the road information system referred to in Schedule 4 Part 2.

"Intellectual Property Rights" means all intellectual property rights of any kind which may subsist or be enforceable, at present or in the future, in any part of the world, including but not limited to all forms of copyright, design right, goodwill, know-how, moral right, performing right, service mark, trade mark, patents, domain names, database rights, trade secrets, confidential information and other similar rights or obligations, whether or not registered or able to be registered in any country, or any applications for such registered rights.

"Key Staff" means the key staff appointed by the Operating Company and includes any additions to, and or replacements of, any members of such as subsequently agreed under the terms of this Contract.

"Landscape Areas" means vegetated areas of the Unit listed or to be listed in the landscape inventory in the Integrated Roads Information System.

"Landscape Development Plan" means the plan to be prepared by the Operating Company as referred to in Schedule 7 Part 4.

"Lane" means a delineated running lane or a hard shoulder of a road within the Unit.

"Lane Closure" means the minimum width of Lane required in accordance with Chapter 8 of the *Traffic Signs Manual* to permit passage by all classes of vehicle is not available.

"Lane Occupation" means a Lane Closure by the Operating Company, in connection with the Operating Company's Operations.

"Lane Occupation Charge" means a charge levied for a Lane Closure under the circumstances stated in Clause 15.5.

"Legislation" means any legislation as from time to time enacted, amended, extended, or re-enacted that applies in the United Kingdom and or in an independent Scotland, including, without prejudice to the generality of the foregoing:

(i) any subordinate legislation including without limitation applicable bylaws,

(ii) any legislation applying in a part of the United Kingdom and or in an independent Scotland only, and

(iii) any legislative act of the European Union or the Commission of the European Community that without further enactment has legal effect in the United Kingdom and or in an independent Scotland.

"LGPS" means the Local Government Pension Scheme (Scotland) established pursuant to regulations made in exercise of powers under sections 7 and 12 and Schedule 3 of the *Superannuation Act 1972.*

"LGPS (Administration) Regulations" not used.

"LGPS (Benefit) Regulations" not used.

"LGPS (Compensation) Regulations" means the *Local Government (Discretionary Payments and Injury Benefits) (Scotland) Regulations 1998.*

"LGPS Regulations" **"** means the *Local Government Pension Scheme (Scotland) Regulations 2014*.

"Local RAUC" means the local Roads and Utilities Committee organised by each road works authority to hold local liaison/co-ordination meetings, to co-ordinate works on roads to minimise inconvenience to road users.

"Lump Sum Quotation" means a fully inclusive, fixed price quotation provided by the Operating Company to the Scottish Ministers for the execution of all the Operations proposed in respect of the execution of an Order, including a detailed breakdown of resources, quantities, rates and prices.

"Major Incident" has the meaning given to it in Schedule 7 Part 3.

"Management System" means the system for the management of health and safety, quality, and environment, to be provided by the Operating Company.

"Mass Action Programme" has the meaning given to it in Chapter 8 of Transport Scotland's *Strategic Road Safety Plan*.

"Minor Incident" has the meaning given to it in Schedule 7 Part 3.

"Mobilisation Period 1" means the period commencing on Operations Commencement Date 1 and ending at 0000 hours on Commencement of Service Date 1, and relates to Network 1.

"Mobilisation Period 2" means the period commencing on Operations Commencement Date 2 and ending at 0000 hours on Commencement of Service Date 2, and relates to Network 2.

"Monitoring Indicator" means a numerical measure of service provision as stated in Schedule 5 Part 6, Annex 5.6/B.

"Multi Agency Response Team" has the meaning given to it in Schedule 7 Part 3.

"Mutual Aid" means the provision of assistance and resources to Operational Partners in exceptional circumstances as determined by the Director.

"National Street Gazetteer" has the meaning given to it in Schedule 7 Part 5.

"New Employee" means those employees employed by the Operating Company and or any contractor or any sub-contractor to execute the Operations who will be working alongside the Transferring Employees.

"New Employee Pension Contributions" means the ordinary employer pension contributions payable by the Operating Company and or any contractor or any sub-contractor in respect of New Employees.

"Network 1" means Network 1 as set forth in Schedule 3 Part 2.

"Network 2" means Network 2 as set forth in Schedule 3 Part 2.

"Network Operations" means a branch of Transport Scotland which is responsible for the provision of a number of traffic, travel information and on road customer support services all of which are aimed at improving the operational efficiency and journey time reliability of the Trunk Road network.

"New Entrant" means an individual new to the construction industry or who has not worked in the construction industry for six months or more.

"Non-Adjustable Element" means a reduction to be applied to the amount of price adjustment calculated in accordance with Clause 10.7.3.

"Non-Conformance" means any:

(i) Default by the Operating Company, or

(ii) defect in Operations, including but not limited to any defect in Design or resulting from defective Design, defect resulting from defective materials or defective workmanship, failure of any part of the Operations to meet or continue to meet the provisions of this Contract, and damage, destruction or other effect consequential on any Default of the Operating Company, or

(iii) failure, as shown by the value of a Performance Indicator, to achieve the required standard of service, or

(iv) failure by the Operating Company to professionally ensure the adequacy of the insurances offered by a Works Contractor in respect of a Works Contract.

"Non-Conformance Liability Period" means the period commencing on the Scheme Completion Date and expiring on the later of:

(i) the date falling 52 weeks after the Scheme Completion Date, and

(ii) the expiry date of any guarantee and or warranty required to be provided by the Scottish Ministers Requirements for any part of the Operations.

"Non-Execution Adjustment" means the sum of money that the Scottish Ministers are entitled to receive from the Operating Company, in addition to the compensation, costs and expenses that the Scottish Ministers are otherwise entitled to recover in respect of Default by the Operating Company, as stated in Clause 15.4.6.

"Normal Working Hours" means 0700 to 1900 hours on Working Days.

"Notice of Arbitration" has the meaning given to it in Clause 18.3.1.

"Notice of Assignation of Rights" means a notice in the form contained in Schedule 4 Part 4, given by the Operating Company to a person or organisation causing Damage to Crown Property, of the Scottish Ministers' assignation to the Operating Company of their rights against the person or organisation.

"Notice of Dispute" has the meaning given to it in Clause 18.1.2.

"Notice of Extension" has the meaning given to it in Clause 6.3.3.

"Notice of Non-Conformance" means a notice issued by the Performance Audit Group to the Operating Company recording an Operating Company Non-Conformance.

"Observation Resulting from Inspection" means a notice issued to the Operating Company by the Performance Audit Group identifying circumstances requiring action by the Operating Company.

"Operating Company" means the person or persons, firm or firms or company or companies with whom the Scottish Ministers have completed and signed the Agreement; and such definition shall include Amey Services Limited and the Operating Company's personal representatives, successors and permitted assignees. All references to the Operating Company are deemed to include reference to its employees, agents, representatives, contractors, sub-contractors and or suppliers of whatever tier, unless the context otherwise requires.

"Operating Company Change Proposal" means any change to the Scottish Ministers' Requirements proposed by the Operating Company in accordance with Clause 14.1.

"Operating Company's Audit Inspection" means an inspection carried out by the Operating Company to monitor compliance with the Scottish Ministers' requirements for the maintenance of grassed areas.

"Operating Company's Hold Point" means a point incorporated in the Management System beyond which work shall not proceed until all work up to that point has been demonstrated under the Management System as complying with the requirements of this Contract.

"Operating Company's Representative" means the person appointed by the Operating Company pursuant to Clause 2.5.4.

"Operational Items" means:

(i) any Design forming part of the Operations,

(ii) any materials, plant or equipment forming part of the Operations and or for incorporation within the Unit,

(iii) the Unit (insofar as the Unit is within the control of the Operating Company), or

(iv) any person on the Unit, including but not limited to users of the Unit (insofar as the Unit is within the control of the Operating Company).

"Operational Partners" means:

(i) branches within Trunk Road and Bus Operations Directorate and other Directorates in Transport Scotland and Transport Directorate,

(ii) Traffic Scotland Operations and Infrastructure Services Contractor,

(iii) the Office of the Scottish Road Works Commissioner,

(iv) the Performance Audit Group,

(v) Police Scotland,

(vi) the Emergency Services,

(vii) Traffic Scotland Systems Contractor,

(viii) Transport Scotland's customers,

(ix) the Ministry of Defence,

(x) local authorities,

(xi) Scottish Canals,

(xii) bridge authorities,

(xiii) the Traffic Customer Care Line service,

(xiv) operating companies in adjacent units,

(xv) design build and finance operators in adjacent units,

(xvi) the trunk road incident support service patrols in adjacent units,

(xvii) the Scottish Environment Protection Agency,

(xviii) the Highways Agency and its service providers,

(xix) the Department for Transport,

(xx) Authorised contractors, notified to the Operating Company by the Scottish Ministers,

(xxi) Undertakers,

(xxii) Statutory Authorities,

(xxiii) Network Rail,

(xxiv) Marine Scotland,

(xxv) Forth Ports Limited,

(xxvi) until Commencement of Service Date 1, FETA,

(xxvii) until Commencement of Service Date 2, FCBC,

(xxviii) Ineos Refining or their successors in their capacity as owners of Grangemouth Refinery,

(xxix) BP plc or their successors in their capacity as owners of the pipe line which runs along the south bank of the Firth of Forth, and

(xxx) any other organisation notified to the Operating Company by the Scottish Ministers.

"Operations" means Core Operations and Ordered Operations.

"Operations Commencement Date 1" means the date notified by the Scottish Ministers in accordance with Clause 2.13 notwithstanding the date or dates of award or execution of this Contract and relates to Network 1.

"Operations Commencement Date 2" means the date notified by the Scottish Ministers in accordance with Clause 2.13 and relates to Network 2.

"Operations Instruction" means the Operating Company's internal instruction to its personnel in respect of Operations.

"Order" means an instruction issued by the Scottish Ministers to the Operating Company specifying Ordered Operations.

"Ordered Operations" means the activities, duties, obligations and responsibilities of the Operating Company set out in this Contract stated as being subject to an Order.

"Other Contracts" means as a minimum:

(i) road and bridge construction and maintenance contracts outwith Operating Company arrangements, and

(ii) developers' schemes.

"Overseeing Organisation" means the Director or, if waived in writing by the Director, the Operating Company.

"Parent Undertaking" means Parent Undertaking as set out in section 1162 of the *Companies Act 2006*.

"Part" means a part of a Schedule.

"Parties" means the Scottish Ministers and the Operating Company. (A Party is either one of them as the context dictates.)

"Payment Adjustment Factor" means a factor as stated in Schedule 5 Part 6 to be applied in the measurement of items in the Schedule of Rates and Prices.

"Payment Notified Record" means the record produced by the contract control and management function of the Integrated Roads Information System to document those items paid within the payment of a monthly Statement.

"Payment Received Record" means the record raised by the Operating Company to acknowledge receipt of its monthly payment under this Contract.

"Pension Adjustment Factor" means an increase in the Operating Company's (or any relevant contractor or sub-contractor's) liability to contribute to the LGPS over 3% of Pensionable Authority Employees' pay (as defined in regulation 20 of the LGPS Regulations).

"Pension Contribution Amount" means the Actual Contribution Amount plus the Pension Adjustment Factor.

"Pension Fund Payments" means any and all payments payable under the LGPS Regulations to the LGPS in accordance with or in connection with the relevant Admission Agreement (including the Pension Contribution Amounts referred to in this Contract) by the Operating Company or the relevant contractor and or sub-contractor as appropriate, excluding the liabilities described in Clause 22A.8.1.

"Pensionable Authority Employee" means a Transferring Employee who is a member of or is entitled to be a member of the LGPS on or immediately prior to Commencement of Service Date 1.

"Performance Audit Group" means Halcrow Group Limited, of City Park, 368 Alexandra Parade, Glasgow G31 3AU, or its successors or assignees or any other person or persons, firm or company that the Director may from time to time appoint.

"Performance Indicator" means a numerical measure of the Operating Company's compliance with a requirement of this Contract.

"Pollution" means any pollution or contamination of any part of the Operations or the Unit or outwith the Unit arising out of the Operations or of water or land or the atmosphere and all losses, damage and bodily injury, howsoever caused, arising from or as a consequence of such pollution.

"Possession" means planned safety arrangements that control or prevent the normal movement of rail traffic between defined locations and for a predetermined period.

"Premises" means all of the buildings and areas of land leased to the Operating Company which do not form part of the Unit and which are subject to a separate lease agreement(s) between the Scottish Ministers and the Operating Company.

"Press Transport Scotland" means the team in Transport Scotland that are responsible for the management, answering and issue of media and press enquiries on behalf of Transport Scotland.

"Principal contractor" has the meaning given to it in the CDM Regulations.

"Principal Crossings" means together the Forth Road Bridge and the Queensferry Crossing.

"Principal Inspection" is as defined in the *Design Manual for Roads and Bridges*, as added to and amended by Schedule 7 Part 6 and Schedule 7 Part 7.

"Professional Services" means Operations undertaken by the Operating Company staff who are specified in Appendix 62/1 of the Specification.

"Programmed Special Inspection" means the same as Special Inspection, where the work undertaken is a Core Operation.

"Project Manager" means the person consented to by the Director as Contract Administrator in accordance with Clause 4.11.2.

"Provisional TUPE Information" means the list prepared and updated by the Scottish Ministers of all FETA's staff engaged in, or wholly or mainly assigned to, the provision of the Operations who are expected to transfer to the Operating Company under the TUPE Regulations. .

"Quality Plan" means the quality plan to be provided by the Operating Company pursuant to Schedule 5 Part 1.

"Queensferry Crossing" means, as at Operations Commencement Date 1, the new Structure under construction which will, from Commencement of Service Date 2, comprise the structure spanning the Firth of Forth comprising the cable stayed bridge and approach viaducts between and including the north and south abutments.

"RAUC(S)" means the Roads and Utilities Committee of Scotland that provides support and advice to the Scottish Road Works Commissioner, with a view to improving the planning, co-ordination and quality of road works in Scotland.

"Record of Determination" means the document prepared on behalf of the Director by the Operating Company to record if an environmental impact assessment is required for a Design. The Director shall provide the Operating Company with a copy of the form to be used for preparing the Record of Determination.

"Records" means Contemporary Records and Historical Records.

"Records Register" means a schedule of Records to be held by the Operating Company.

"Records Retention Period" means the periods referred to in Schedule 5 Part 2.

"Relevant Entity" means

(i) the Operating Company and, where the Operating Company comprises more than one legal person, each such person,

(ii) where the Operating Company is a limited company, any Holding Company of the Operating Company and any Holding Company of such Holding Company,

(iii) where the Operating Company is a limited liability partnership, any member of that limited liability partnership,

(iv) where the Operating Company is a partnership or a limited partnership, any partner in that partnership or limited partnership, and

(v) any Parent Undertaking of any entity referred to in (i), (ii), (iii) and or (iv) above.

"Relevant Organisation" means an organisation as referred to in Clause 23.1.

"Remedial Notice" means a notice of a Default given by the Scottish Ministers to the Operating Company, stating requirements for remedial action.

"Remedial Period" means the period stipulated in a Remedial Notice for remedying the relevant Default.

"Route Accident Reduction Plan" means a document containing proposals for reduction of road accidents, based upon consideration of accident patterns and rates along routes or parts of routes.

"Route Safety File" means a file containing information about a route that includes details of its overall safety performance.

"Route Safety Group" means a group, consisting of representatives from organisations with an interest in road safety (such as local authorities, Emergency Services, safety camera partnerships and others), formed to develop a sound knowledge base made up of five key components: route information and contacts, accident analysis, stakeholder and community issues, scheme programmes (safety, minor and major improvements, etc), and technical projects and initiatives.

"Safety Inspection" means the inspection referred to in Schedule 7 Part 1.

"Safety Management Review System" means the system developed in accordance with *Highways Agency Interim Advice Note 139/11- Managed Motorways Safety Risk Working Instructions* and *Highways Agency Interim Advice Note 151/11- Safety Risk Management Guidance for Network Delivery and Development Directorate* for the management of safety in the operation of the managed motorways in Scotland.

"Safety Management Steering Group" means the group comprising senior representatives of Transport Scotland's major projects, standards, road safety and network management functions which has responsibility for demonstrating that due care is exercised in the design and operation of the managed motorways in Scotland.

"Safety Patrol" means the patrol referred to in Schedule 7 Part 1.

"Schedule" has the meaning given in the Agreement.

"Schedule of Rates and Prices" means Schedule 2 Part 2 including the rates and prices inserted by the Operating Company as part of its Final Tender Submission.

"Scheme" means a discrete element of work intended to be carried out or that is carried out as Operations and is subject to a Bid and or is subject to an Order, or is

intended to be carried out or is carried out as a Works Contract. The repair of a Category 1 Defect with a value of repair of no more than £10,000 is not a Scheme.

"Scheme Closure Date" means the date logged onto the contract control and management function of the Integrated Roads Information System on which all amounts for a Scheme have been included in a Statement and after which no further amounts will be claimed by the Operating Company.

"Scheme Completion Date" means the date logged onto the contract control and management function of the Integrated Roads Information System on which all Operations within each individual Scheme have been completed.

"Scheme Identifier" means the unique scheme identifying number allocated by the contract control and management function of the Integrated Roads Information System.

"Scheme Investigations" means the investigations and studies referred to in paragraph 2.2.3 of Schedule 6 Part 4.

"Scottish Ministers' Hold Point" means a point notified by the Scottish Ministers at any time to the Operating Company for incorporation in the Management System, beyond which point the Operating Company is not permitted to proceed without demonstrating under the Management System to the Scottish Ministers' satisfaction that it has complied with the requirements of this Contract up to that point.

"Scottish Ministers' Requirements" means Schedules 3 to 9.

"SRWR" means the register of roadworks that provides the means for the Scottish Ministers and local roads authorities to meet their obligations in relation to *the New Roads and Street Works Act 1991* and any successor register notified at any time to the Operating Company by the Scottish Ministers.

"Scottish Salt Group" has the meaning given to it in Schedule 7 Part 2.

"Scour Assessment" has the meaning given to it in the *Design Manual for Roads and Bridges*, as added to and amended by Schedule 7 Part 6.

"Scour Inspection" has the meaning given to it in the *Design Manual for Roads and Bridges*, as added to and amended by Schedule 7 Part 6.

"SEAS" means the Scottish Government's accounting system that is the financial ledger used by Transport Scotland.

"Security Patrol Plan" means the plan to be prepared and maintained in accordance with the provisions of Clause 4.10.2 and Schedule 7 Part 7.

"Series" means any of the series of items numbered 100 to 2700, 3000, 3300, 5000, 6100 to 6500, 6700, 6800, 7000 contained in Schedule 2 or such other numerical series of items as may be added to Schedule 2 from time to time.

"Service Delivery Period 1" means the period from 00.00 hrs on Commencement of Service Date 1 to 00.00 hrs on Commencement of Service Date 2.

"Service Delivery Period 2" means the period from 00.00 hrs on Commencement of Service Date 2 to 24.00 hrs on the Service End Date.

"Service End Date" means the later of the:

(i) Initial Service End Date, and

(ii) date specified in the last Notice of Extension.

"Severe Weather" means adverse weather conditions that disrupt, or are likely to disrupt, driving conditions and traffic movements on the Unit.

"Site" means the land or place where the work activity or part of the work activity of the Operations is executed.

"Site Operations Instruction" means a copy of an Operations Instruction issued to Operating Company personnel, or sub-contractors of the Operating Company, for the carrying out of Operations on or relating to a Site.

"Site Waste Management Plan" means a plan for management, reuse, recycling and disposal of waste produced in connection with a Scheme.

"Special Event" means any organised event likely to generate significant traffic flow or significant disruption to traffic flow within the Unit.

"Special Inspection" is as defined in the *Design Manual for Roads and Bridges*, as added to and amended by Schedule 7 Part 6 and Schedule 7 Part 7.

"Special Road" means a Trunk Road which is designated as a Special Road under section 7 of the Roads (Scotland) Act 1984.

"Special Requirements" means the published requirements of the Relevant Organisations which are current at the time of undertaking Operations.

"Specification" means Schedule 9 and documents referred to therein.

"Specified Person" means the Director, who shall be the "specified person" as defined in section 110A(6) of the *Housing Grants, Construction and Regeneration Act 1996*.

"Standard Incident Diversion Route" means existing roads designated by the Director as temporary routes for maintaining traffic around sections of the Trunk Road network temporarily closed due to roadworks, Incidents, Severe Weather events or any other disruption events.

"Standard Reports" means reports generated by the contract control and management function of the Integrated Roads Information System in a fixed or variable format on a routine or ad hoc basis in accordance with the Director's requirements as to period covered and level of detail.

"Statement" means the documentation provided by the Operating Company each month to support its request for payment.

"Statement of Intent" means a document prepared by the Operating Company which describes the scope of, and justification for, a Scheme.

"Statutory Authority" means an organisation constituted under statute which has functions that may affect or be affected by the Trunk Roads or Operations or Works on the Trunk Roads.

"Statutory Function" means any statutory function given to a Statutory Authority.

"Statutory Order" means any order promoted by the Scottish Ministers or the Operating Company pursuant to exercising a Statutory Function.

"Street Works" means road works as defined by Section 107 of the New Roads and Street Works Act 1991.

"Structural Health Monitoring System" means the system provided on the Queensferry Crossing and in the control room and server room (the control room and the server room being contained in the Central Office) for the monitoring and response evaluation of the Queensferry Crossing under in service conditions.

"Structure" means any:

(i) structure listed in Table 1 of BD 63/07 as amended by Table 3 of BD 63/07 contained in the *Design Manual for Roads and Bridges*,

(ii) footbridge with span greater than or equal to 3.0 metres that carries pedestrians, cyclists, livestock or equestrians over or alongside Trunk Roads,

(iii) underpass that allows pedestrians, cyclists, equestrians, livestock or farm vehicles to pass under a Trunk Road (such underpasses are deemed to be culverts if their span is between 0.9 and 3.0 metres),

(iv) sign or signal gantry over or adjacent to a Trunk Road, or sign or signal gantry that is the Scottish Ministers' responsibility at a specified location adjacent to a local road, supporting lighting, fixed signing, electronic signing, electrical equipment, or control equipment, and

(v) service duct that is a structure for database purposes.

"Structures Safety Inspection" means the inspection defined in *Design Manual for Roads and Bridges Part 4 BD 63/07: Inspection of Highway Structures*, as added to and amended by Schedule 7 Part 6.

"Supervisor" means the person consented to by the Director as Contract Administrator in accordance with Clause 4.11.2.

"Supervisory Control and Data Acquisition System" means the system provided on the Queensferry Crossing and in the control room and server room (the control room and the server room being contained in the Central Office) to monitor and control all mechanical and electrical equipment

"Supplied Data" means any information, documents, designs and data supplied to the Operating Company, directly or indirectly, by or on behalf of the Scottish Ministers, whether by their consultants, agents, servants or other such personnel.

"SV" means load model 3 (Special Vehicle) loading as defined in British Standard EN 1991- Part 2:2003 Actions on Structures, Traffic Loads on Bridges and the National Annex to British Standard EN 1991-Part 2:2003.

"Technical Approval" is as defined in the *Design Manual for Roads and Bridges*.

"Technical Approval Authority" is as defined in the *Design Manual for Roads and Bridges*.

"Technical Approval Schedule" is as defined in the *Design Manual for Roads and Bridges*.

"Temporary Traffic Regulation Order" means an order issued pursuant to Section 14 of the *Road Traffic Regulation Act 1984*.

"Termination Date" means the earlier of:

(i) the Service End Date, or

(ii) the date on which this Contract is terminated pursuant to the terms of this Contract.

"Threshold Value" has the meaning given to it in Clause 7.2.7.

"Total Order Value of Scheme" means the cumulative value of the individual Order values of Operations as contained in all Orders raised under individual Scheme Identifiers.

"Traffic Customer Care Line" means the dedicated 24 hour phone service for traffic customer care.

"Traffic Customer Care Line Operator" means the party that operates the Traffic Customer Care Line on behalf of Transport Scotland.

"Traffic Scotland" means the Traffic Scotland Service.

"Traffic Scotland Equipment" means the Scottish Ministers' intelligent transport system generally comprising all equipment, transmission buildings located on or off the Trunk Road, associated communications equipment, computers and operator workstations operated, maintained and developed by the Traffic Scotland Operations and Infrastructure Services Contractor in the provision of the Traffic Scotland Service.

"Traffic Scotland National Control Centre" means the location from which the operational element of the Traffic Scotland Service is provided and managed.

"Traffic Scotland Operations and Infrastructure Service Contractor" is the company appointed by the Scottish Ministers to deliver the Traffic Scotland Service and whose identity and role are more particularly detailed and described in Schedule 3 Part 7.

"Traffic Scotland Service" means the service set up by the Scottish Ministers whose objectives are set out in Schedule 3 Part 7 and which service is delivered by Traffic Scotland Operations and Infrastructure Services Contractor on behalf of the Scottish Ministers.

"Traffic Scotland Systems Contractor" means the contractor appointed by the Scottish Ministers who provides, on behalf of the Scottish Ministers, support, maintenance, development and equipment supply services for the Traffic Scotland incident management system, web system, national traffic database system, and internet protocol communication system and whose identity and role are more particularly detailed and described in Schedule 3 Part 7.

"Transferring Employees" means those staff formerly employed by FETA who by virtue of the *Forth Road Bridge Act 2013* and the TUPE Regulations transfer to the Operating Company.

"Transport Scotland" means the entity which is an executive agency of the Scottish Government and is the national transport agency for Scotland.

"Transport Scotland Trunk Road and Bus Operations Directorate" means a division within Transport Scotland.

"Transport Scotland Structures Workbank" means the scope of work defined by the Director relating to the maintenance of Structures on the Trunk Road network.

"Trunk Road" means a road as defined in the *Roads (Scotland) Act 1984* for which the Scottish Ministers are the roads authority including without limitation:

(i) carriageways, hard shoulders, dedicated bus lanes, central reserves, interchanges, slip roads, connecting roads, access and service roads, roundabouts, junctions,

(ii) car parks, lay-bys, traffic islands, police observation areas,

(iii) cycle tracks, cycleways, footways, footpaths, pavements,

(iv) Structures,

(v) any associated infrastructure and amenities, including fences, barriers and restraint systems, kerbs, gullies, drainage systems outfalls and balancing ponds, grassed areas, hedges, trees, planted areas, traffic signs, traffic signals, authorised signs erected by, or for, any party other than the Scottish Ministers, road furniture, road lighting, loop detector systems, communications installations, picnic areas, environmental mitigation measures, embankments and cuttings, rock faces, coastal defences, erosion protection work, and

(vi) any other item set forth in this Contract or confirmed in writing from time to time by the Scottish Ministers.

"Trunk Road Incident Support Service" means all Operating Company's vehicle and personnel specifically designated to undertake standing patrols on defined sections of Trunk Road with the purpose of providing first line response to Incidents and Defects identified on the Trunk Road network.

"TUPE Commencement Information" means the information regarding the Transferring Employees that includes as a minimum identity, age, length of service, job title and terms and conditions of employment and which constitutes Employee Liability Information within the meaning of regulation 11 of the TUPE Regulations.

"TUPE Regulations" means the *Transfer of Undertakings (Protection of Employment) Regulations 2006*.

"TUPE Information" means the information listed as such in Clause 22.1.17

"Undertaker" means "undertaker" as defined in Section 107 of the *New Roads and Street Works Act 1991.*

"Undisclosed Employees" has the meaning given to it in Clause 22.1.21.

"Undisclosed Agreements" has the meaning given to it in Clause 22.1.21.

"Unit" means Network 1 until 00:00 hours on Commencement of Service Date 2 and Network 2 from 00.00 hours on Commencement of Service Date 2 including the group of Trunk Roads to be managed and maintained according to the provisions of this Contract and as the Unit may be amended in the terms of this Contract.

"Updated TUPE Information" has the meaning given to it in Clause 22.1.18.

"Value Added Tax" means value added tax as provided for in the *Value Added Tax Act 1994* and in supplemental Legislation (whether delegated or otherwise) or in any primary or secondary Legislation promulgated by the European Community, or any official body or agency of the European Community and any similar sales,

consumption or turnover tax introduced in addition to the foregoing and includes the charge to tax under paragraph 6 of Schedule 9A of the *Value Added Tax Act 1994*.

"Value for Money Assessment" means an assessment provided to the Director as part of a Bid to demonstrate the achievement of maximum effectiveness through efficient use of resources and at minimum cost.

"Vehicle Recovery Service" means a service to be provided by the Operating Company which provides vehicle recovery on the Principal Crossings and whose role and functions are set out in Schedule 7 Part 3.

"VisitScotland" means Scotland's national tourist board or its successor organisation.

"Weather Stations" means road sensors, weather station CCTV cameras, ice prediction equipment, road temperature sensors, and other weather station sensors forming part of the apparatus for weather monitoring.

"Winter Service" means the service provided by the Operating Company in accordance with Schedule 7 Part 2.

"Winter Service Patrols" means the patrols that monitor road conditions to supplement weather information and carry out precautionary or de-icing treatments to deal with conditions that may arise during the Winter Service Period.

"Winter Service Period" means the period that commences on 1 October and finishes on 15 May in each Annual Period except that (a) if the first Annual Period starts between 1 October and the following 31 March both dates inclusive the commencement date of the Winter Service Period for the first Annual Period shall be Commencement of Service Date 1 and (b) if the last Annual Period finishes before 15 May then the Winter Service Period for the last annual Period shall finish on the Service End Date.

"Winter Service Plan" means the plan prepared by the Operating Company in accordance with Schedule 7 Part 2.

"Winter Service Plant" means the Operating Company's plant and equipment used to deliver the Winter Service.

"Winter Service Records" means the Records to be maintained by the Operating Company in accordance with Schedule 7 Part 2.

"Winter Service Report" means the report to be prepared by the Operating Company in accordance with Schedule 7 Part 2.

"Work Category" means the category assigned in Schedule 1, Annex 4 to any particular item in Schedule 2 Part 2 or subsequently derived that shall be used when calculating the increase or decrease in respect of Contract Price Fluctuations to amounts otherwise payable to the Operating Company in accordance with this Contract.

"Work Code" means the code for a Scheme within a Bid, in accordance with the system stated in Schedule 4 Part 1.

"Work Series" means a group of Work Codes, in accordance with the system stated in Schedule 4 Part 1.

"Working Day" means a day (other than a Saturday or Sunday or bank holiday or public holiday) on which banks are open for business in Scotland or would be open other than for the occurrence of an industrial dispute or force majeure event.

"Works" means the temporary work and the permanent work as specified in a Works Contract except that in the Specification reference to the "Works" shall, where the context so requires, be taken to be reference to the Operations.

"Works Contract" means a contract between the Scottish Ministers and a Works Contractor for execution of a Scheme or part of a Scheme.

"Works Contract Instruction" means an instruction issued by the Director to the Operating Company to procure Works Contracts and to undertake related duties as provided by this Contract.

"Works Contractor" means the contractor for a Works Contract.

"9901 Activation" means the activation of a 9901 Bid by the Operating Company.

"9901 Bid" means a bid for the additional payment claimed within a claim submission following a Claim Notification.

1.2 Interpretation

1.2.1 Words importing persons include companies, firms, partnerships, corporations and any other organisation having legal capacity.

1.2.2 Words importing the singular also include the plural and vice versa, where the context so requires.

1.2.3 Words importing the male also include the female and vice versa, where the context so requires.

1.2.4 Except in Schedule 2 and Schedule 9, the headings in this Contract are provided for ease of reference only and are deemed not to be part of, and not to be taken into consideration in the interpretation or construction of, this Contract.

1.2.5 All references in this Contract to "Clause" in:

(i) Schedules 1 to 8 and Schedules 10 and 11, unless otherwise provided, are references to Clauses numbered in Schedule 1 (or parts thereof), and

(ii) Schedule 9 are, unless otherwise provided, references to Clauses numbered in Schedule 9.

1.2.6 Any reference in this Contract to "Schedule" is, unless otherwise provided, a reference to a Schedule to this Contract.

1.2.7 Any reference to any Act of Parliament or Act of the Scottish Parliament shall be construed as a reference to that Act of Parliament or Act of the Scottish Parliament as from time to time amended, extended or re-enacted and to any bye-laws, statutory instruments, rules, regulations and orders, notices, directions, consents or permissions made or given thereunder from time to time.

1.2.8 Any reference to any statutory instrument, rule, regulation, order, notice, direction, consent or permission shall be construed as a reference to that statutory instrument, rule, regulation, order, notice, direction, consent or permission as from time to time amended, extended or re-enacted.

1.2.9 A reference to any person or organisation includes the successors (statutory or otherwise) and permitted assignees or successors in title of such person or organisation, irrespective of whether such succession or assignation has occurred before or after Operations Commencement Date 1.

1.2.10 The word "cost", when used in this Contract, means all expenditure properly incurred or to be incurred, whether on or off the Unit, including overhead costs, except as expressly stated otherwise.

1.2.11 Every reference in documents referred to in this Contract to:

(i) "British Railways",

(ii) "British Railways Board",

(iii) "Railtrack",

(iv) "Network Rail", and

(v) "Railway",

is, where the context permits deemed to be a reference to "Network Rail Infrastructure Limited" or their successors.

1.2.12 Every reference in this Contract and in documents referred to in this Contract to "public holiday" and "Public Holiday" is deemed to be a reference to 01 January, 02 January, 25 December and 26 December, in any year.

1.2.13 Every reference in this Contract to "day" is deemed to be a reference to a calendar day. A day is deemed to start at 00:00:00 hours and ends at 24:00:00 hours.

1.2.14 References within the Specification and the *Design Manual for Roads and Bridges* to:

(i) "defect" means "Defect",

(ii) "category (i) defect" means "Category 1 Defect", and

(iii) "category (ii) defect" means "Category 2 Defect",

unless the context requires or implies otherwise.

1.2.15 Every reference in Schedule 2 Part 1 and Schedule 2 Part 2 to "Plant" is deemed to be a reference to Constructional Plant.

1.2.16 Any requirement on the Operating Company under this Contract to "consult" any firm, organisation or person shall be construed as a requirement also to allow a sufficient period for that consultee to comment on the matter in question.

1.2.17 Any consent or approval given or deemed to have been given by the Scottish Ministers or the Director to the Operating Company pursuant to the terms of this Contract shall not be held to relieve the Operating Company of any of its obligations under this Contract.

1.2.18 All obligations contained in this Contract are deemed to be obligations on the Operating Company unless any such obligation has been specifically stated otherwise.

1.2.19 Where, in this Contract, there is reference to any of the following members of the Core Management Team and or Key Staff:

(i) Operating Company’s Representative,

(ii) Bridges Manager,

(iii) Business Manager,

(iv) Design Manager,

(v) Management System Manager

(vi) Network Manager,

(vii) Operations Manager,

(viii) Planned Maintenance Manager,

(ix) Media and Communications Manager,

(x) Abnormal Load Routeing Manager,

(xi) Construction (Design and Management) (CDM) Coordinator,

(xii) Correspondence Officer,

(xiii) Gantry Manager,

(xiv) Incident Liaison Officers,

(xv) Health, Safety and Risk Manager,

(xvi) Integrated Roads Information System Coordinator,

(xvii) Structural Health Monitoring and Supervisory Control and Data Acquisition Officer,

(xviii) Journey Time Reliability Coordinator,

(xix) Landscape Architect,

(xx) Major Bridge Manager (Forth Road Bridge),

(xxi) Major Bridge Manager (Queensferry Crossing),

(xxii) Planning Application Officer,

(xxiii) Road Safety Manager,

(xxiv) Skid Resistance Manager,

(xxv) Winter Service Manager,

(xxvi) Winter Service Duty Officers

(xxvii) Mobilisation Manager,

these shall be such parties whose roles and or responsibilities are referred to in this Contract.

1.2.20 Where in this Contract the Operating Company is to provide unrestricted access, it is accepted that the Operating Company will not be in breach of such provisions where access is restricted solely on the grounds that Legislation requires that certain restrictions are applied and or that, for safety, the Operating Company requires that any party taking access must comply with rules and regulations of the Operating Company provided that such are reasonable in the opinion of the Director in all the circumstances.

2. CLAUSE 2: SCOPE OF CONTRACT, OPERATING COMPANY OBLIGATIONS, CONTRACT ADMINISTRATION AND APPLICABLE LAW

2.1 Scope of Contract

2.1.1 The Operating Company acknowledges that it has not entered into this Contract in reliance on the accuracy or sufficiency of any Supplied Data. This Contract sets out the entire rights and liabilities of the Operating Company and the Scottish Ministers relating to the subject matter of this Contract and except where it may be expressly referred to or referenced herein supersedes all prior representations, understandings, agreements, and documents between or by the Operating Company and or the Scottish Ministers in regard to the Operations and to any other matters covered by this Contract except in respect of any fraudulent misrepresentations made by either party.

2.1.2 The Operating Company is deemed:

(i) to have inspected and examined the Unit and its surroundings and information available in connection therewith,

(ii) to have inspected and examined and satisfied itself with the condition and suitability of any goods, materials, plant and or equipment handed over or to be handed over to it by the Scottish Ministers or any other party, and information available in connection therewith,

(iii) to have satisfied itself, before submitting its Final Tender Submission, as to the form and nature of the Unit, the extent and nature of the work, and the materials and all other resources necessary, for the completion of the Operations in accordance with the provisions of this Contract,

(iv) to have satisfied itself, before submitting its Final Tender Submission, as to the means of communication with and access to the Unit,

(v) to have satisfied itself, before submitting its Final Tender Submission, as to the accommodation that it may require, including the adequacy and suitability of the Premises provided by the Scottish Ministers as accommodation for its Central Office and main depot and other purposes and of all provisions relating to availability and use of the Premises detailed in Schedule 5 Part 7 and in the separate lease agreement(s) between the Scottish Minsters and the Operating Company,

(vi) generally to have obtained for itself, before submitting its Final Tender Submission, all necessary information as to risks, contingencies and all other circumstances that might have influenced or affected its obligations and any payment received, and

(vii) to have satisfied itself of the correctness and sufficiency of its rates and prices before submitting its Final Tender Submission.

2.1.3 Unless otherwise stated in this Contract, the rates and prices in this Contract cover all of the Operating Company's risks and obligations under this Contract.

2.1.4 The Scottish Ministers neither warrant nor take responsibility for (i) the accuracy of any information in connection with the matters referred to in Clause 2.1.1, Clause 2.1.2 and Clause 2.1.3 and or (ii) the condition and or suitability of any goods, materials, plant or equipment, that may have been provided by, or on behalf of, the

Scottish Ministers or any other source. The Operating Company is deemed not to have relied on any information referred to in Clauses 2.1.1 to 2.1.3 except to the extent that it has satisfied itself under Clause 2.1.2 as to the accuracy of such information for the purposes of the Operations.

The Scottish Ministers do not warrant that any condition or circumstance prevails at the Unit and its surroundings, whether a condition applying generally or to the particular parts or positions.

2.1.5 The Operating Company shall, in return for having undertaken and performed the Operations in accordance with this Contract, be paid the Contract Price.

2.1.6 The Operating Company shall execute all Operations with due expedition and all due diligence and without delay.

2.1.7 Subject to the other provisions of this Contract, the Operating Company shall not make any alteration in, addition to or omission from any Order issued under this Contract.

2.1.8 The Operating Company does not have the exclusive right to undertake work within the Unit.

2.1.9 Extracts from Other Contracts may be provided to the Operating Company by the Director. The Operating Company shall provide such information, co-operation and assistance as may be required to enable any work to be carried out under Other Contracts to be co-ordinated with the Operations and to enable the Scottish Ministers to comply with Other Contracts. The Operating Company shall not do or omit to do anything or permit to be done or omitted by those for whom the Operating Company is responsible, anything which would place the Scottish Ministers in breach of their obligations under Other Contracts to the extent that such obligations relate to or are connected with the Operations and or render the Scottish Ministers liable under Other Contracts to pay losses, costs and or damages of whatsoever nature. The Operating Company shall as a minimum:

(i) liaise and co-operate with all contractors for Other Contracts,

(ii) ensure that so far as practicable no disruption is caused to any work being carried out by contractors for Other Contracts on the Unit, and

(iii) co-ordinate the Operations with any work carried out or to be carried out by contractors for Other Contracts.

The Operating Company will do nothing which will put the Scottish Ministers in breach of their obligations under Other Contracts.

2.2 Operating Company Obligations

2.2.1 The Operating Company shall be responsible for the acts, Defaults, omissions and negligence of its employees, agents contractors, sub-contractors and suppliers (of all tiers), representatives and other persons engaged by it in any capacity whatsoever, as if they were the acts, Defaults, omissions or negligence of the Operating Company.

2.3 Operating Company Knowledge

2.3.1 Without limitation to its actual knowledge, the Operating Company shall for the purposes of this Contract be deemed to have such knowledge in respect of the Operations as is held by:

(i) the Designer,

(ii) the Checker,

(iii) the Road Safety Manager, and

(iv) any other persons engaged by it in any capacity.

2.4 Delegation of Statutory Functions

2.4.1 The Director may from time to time delegate to the Operating Company any additional Statutory Functions that are allowed to be contracted out in accordance with the:

(i) *Roads (Scotland) Act 1984*,

(ii) *The Secretary of State's Trunk Road Functions (Contracting Out) (Scotland) Order 1996* (Statutory Instrument 1996 No 878 (S99)) made under Section 69 of the *Deregulation and Contracting Out Act 1994*,

(iii) *New Roads and Street Works Act 1991*,

(iv) *Forth Crossing Act 2011,* and

(v) *Forth Road Bridge Act 2013,*

subject to the Scottish Ministers giving the Operating Company not less than four weeks' prior written notice.

The Director may from time to time delete or vary the existing delegation of any Statutory Function to the Operating Company.

To the extent that such delegation, deletion or variation is in respect of any of the Statutory Functions specified in this Contract, no compensation is due or shall be paid to or by either the Scottish Ministers or the Operating Company for such addition, deletion or variation.

2.5 Arrangements for the Administration of this Contract

2.5.1 The Director is empowered to act on behalf of the Scottish Ministers in respect of all their powers and duties under this Contract. He is responsible for administering this Contract on behalf of the Scottish Ministers.

2.5.2 The Director may from time to time in writing authorise any person to carry out any duty of the Director under this Contract on behalf of the Director.

Prior notice in writing of any such authorisation will be given by the Director to the Operating Company. Such authorisation shall continue in force until such time as the Director notifies both the Operating Company and the authorised individual in writing of its cessation.

2.5.3 If the Operating Company is dissatisfied with any Order given by a person authorised to carry out duties of the Director, the Operating Company may refer the matter in writing to the Director, who will thereupon confirm, reverse or vary such Order in writing.

2.5.4 The Operating Company shall appoint and provide an Operating Company's Representative, who shall have full authority to act as agent of the Operating Company in relation to all matters arising out of, or in connection with, this Contract

and who shall be appointed, available and in place at Commencement of Service Date 1.

The Operating Company's Representative shall be appointed to act on a full-time basis as the Operating Company's representative in respect of all matters pertaining to this Contract.

The Operating Company's Representative shall be the Operating Company's principal point of contact for the Scottish Ministers, their representatives and the Core Management Team throughout the Contract Period. All communications between the Scottish Ministers and the Operating Company or any of its members shall be made through the Operating Company's Representative.

The Operating Company's Representative shall ensure that the Operating Company executes all Operations in accordance with the requirements of this Contract, and that the Management System demonstrates the fulfilment of those requirements.

2.5.5 From Operations Commencement Date 1, the Operating Company shall coordinate, plan, manage and maintain the Operations. Following the establishment of the interim central office, the Operations shall be coordinated, planned, managed and maintained by the Operating Company from the interim central office and thereafter from the Central Office as set out in Schedule 5 Part 7 until the Service End Date.

2.5.6 The Operating Company shall establish and maintain such additional subordinate offices, depots, and other facilities as required to enable the Operating Company to execute the Operations.

2.5.7 The Operating Company's Representative and the Core Management Team shall be responsible to the Operating Company and shall act independently of any other part of their organisation that may be carrying out work related in any way to this Contract.

2.5.8 This Contract provides for the Performance Audit Group to audit the performance of the Operating Company and to undertake various related duties and obligations.

The Director may from time to time substitute for the existing Performance Audit Group a new person, persons, firm, or company, provided that on each such occurrence the Director will in writing notify the Operating Company of the identity of the substitute person, persons, firm or company appointed.

The Performance Audit Group is responsible for administering specified parts of this Contract on behalf of the Scottish Ministers.

The Scottish Ministers may from time to time change the duties, responsibilities and authority of the Performance Audit Group. The Director will notify the Operating Company in writing of any such changes at least three days before they take effect.

2.6 Assignation and Subcontracting

2.6.1 This Contract shall be personal to the Operating Company.

The Operating Company shall not assign, novate, or otherwise transfer, by any means whatsoever, any right, interest or obligation which it may have in or under this Contract without the prior written consent of the Scottish Ministers and any Default in respect of this requirement shall entitle the Scottish Ministers to terminate this Contract in accordance with the provisions of this Schedule 1.

2.6.2 Following Operations Commencement Date 1, the Operating Company shall advertise through the Public Contracts Scotland advertising portal all new sub-contracting opportunities related to the execution of this Contract that the Operating Company had not already planned to award to a particular subcontractor or supplier when preparing its Final Tender Submission for the award of this Contract.

2.6.3 Except where otherwise provided by this Contract, the Operating Company shall not subcontract any part of the Operations without the prior written consent of the Scottish Ministers.

2.6.4 The provision of labour on a labour-only basis does not require the written consent of the Scottish Ministers under the provisions of Clause 2.6.3.

2.6.5 No, subcontracting or other transfer of any duty, function, liability, obligation or other responsibility (or any part thereof) incumbent upon the Operating Company in terms of this Contract by any means whatsoever to any third party by the Operating Company shall have the effect of relieving the Operating Company of any such duty, function, liability, obligation, or responsibility (or any part thereof) owed to the Scottish Ministers in terms of this Contract, notwithstanding that the Scottish Ministers have consented to such, subcontracting or other transfer and the Operating Company shall at all times be bound fully to implement this Contract.

2.6.6 The Operating Company shall provide to the Scottish Ministers, when they so request, a copy of the agreement or other document that records any permitted assignation, subcontracting, or other transfer arrangements with a third party of any of the Operations under or in terms of this Contract.

2.7 Giving of Notices and Payment of Fees

2.7.1 The Operating Company shall give all notices, take all actions, obtain all licences and pay all fees required to be given, taken or paid by any Legislation in relation to the execution of the Operations and by the rules and regulations of all Statutory Authorities, companies and Undertakers whose property or rights may be affected in any way by the Operations, including but not limited to such licences required by the *Marine (Scotland) Act 2010, Environment (Controlled Activities) Regulations 2011* and or by Forth Ports Limited. The Operating Company shall provide all assistance to the Scottish Ministers required in respect of all such licences, which shall include as a minimum giving all notices, making applications and taking all necessary action. The payment of fees in respect of licences required by the *Marine Scotland Act 2010* and or Forth Ports Limited only shall be subject to an Order. All other fees shall be borne by the Operating Company.

2.8 Legislation

2.8.1 The Operating Company shall, in undertaking and performing the Operations and all other obligations incumbent upon it under this Contract, ascertain and comply in all respects with the provisions of all Legislation that apply to the Operations and with the rules and regulations of Statutory Authorities, Relevant Organisations and Undertakers.

The Operating Company shall indemnify the Scottish Ministers against all penalties and liability of every kind for breach of any Legislation or such rules and regulations.

Provided always that:

(i) except in the case of a Design, the Operating Company is not required to indemnify the Scottish Ministers against the consequences of any such breach that is the unavoidable result of complying with any Order of the Scottish Ministers,

(ii) where an Order is at any time found not to comply with any such Legislation, rules or regulations, the Scottish Ministers shall issue such further Order as necessary to secure compliance, and

(iii) the Operating Company is responsible for obtaining any planning permission, consents or other permissions of any nature which may be necessary in respect of the Operations or any completed Operations undertaken under any Order.

Such obligations shall include obtaining any such permissions and consents necessary in respect of any Design and any Works Contract that are subject to an Order.

2.8.2 The Operating Company shall comply with the statutory and other procedures, rules and regulations specified in this Contract, or contained in, or which form the subject of, any Order.

2.9 Scots Law to Apply

2.9.1 This Contract shall be governed by and interpreted in accordance with Scots Law. Except where this Contract provides otherwise, the Parties hereby submit to the exclusive jurisdiction of the Scottish Courts.

2.10 Language

2.10.1 All documents to be produced for, or to be provided to, the Scottish Ministers in accordance with this Contract shall be in English except where this Contract provides otherwise.

2.10.2 All:

(i) operating and maintenance instructions and identification labels appearing on Constructional Plant and all other written and printed matter required for the Operations, and

(ii) notices to third parties including the public given by the Operating Company in the course of executing the Operations,

shall be in English and in such other language or languages as required by the other provisions of this Contract or ordered in writing by the Scottish Ministers.

2.11 Notices

2.11.1 Except where otherwise provided in this Contract, any document, notice or other communication required or permitted to be given or served in terms of this Contract may be given or served personally or by sending by first class recorded delivery post at or to:

(i) in the case of the Scottish Ministers:

The Director, Trunk Road and Bus Operations
Transport Scotland
Buchanan House
8th floor
58 Port Dundas Road
Glasgow
G4 0HF

(ii) in the case of the Operating Company, its registered office or Central Office,

(iii) and, in the case of the Performance Audit Group:

Performance Audit Group
Halcrow Group Limited
City Park
368 Alexandra Parade
Glasgow
G31 3AU

(iv) or, in all three cases at or to such other address as last notified in writing.

2.11.2 Subject to evidence to the contrary, any document, notice or other communication (other than an Order) given or served by first class post in accordance with the provisions of this Clause 2.11 is deemed to be given or served on the second Working Day after posting.

Subject to evidence to the contrary, proof of proper addressing and posting as stated above is deemed to be proof of such giving or service.

2.11.3 Notwithstanding the other provisions of this Clause 2.11, Orders shall generally be issued by transmission through the contract control and management function of the Integrated Roads Information System and shall be deemed to have been received when the Order has so been transmitted by the Scottish Ministers to the Operating Company.

2.12 Conflict of Interest

2.12.1 The Operating Company shall take all necessary steps to ensure that no conflict of interest arises to it in the execution of the Operations.

In the event that the Operating Company identifies that it has, or may have, an actual or potential conflict of interest, it shall notify the Scottish Ministers immediately giving full details of the actual or potential conflict together with as soon as practicable thereafter details of the steps it proposes to take to remove such for the Scottish Ministers' consent (which consent may impose additional steps or amendments to such steps).

Where the Scottish Ministers do not consent to the steps proposed, the Scottish Ministers may, at their sole discretion, either, appoint others to execute the relevant Operations or, advise the Operating Company of the steps which the Scottish Ministers require the Operating Company to take to remove such conflict.

Where the Operating Company considers that the conflict cannot be removed or cannot be removed without incurring such cost which a contractor experienced in executing work similar to the Operations would consider to be commercially unreasonable (but excluding circumstances personal to the Operating Company), it

will advise the Scottish Ministers who may appoint a third party to perform the relevant obligation.

Where the Scottish Ministers consent (conditionally or otherwise) or impose other steps, the Operating Company shall immediately carry out such steps and remove, or procure the removal of, any such conflict and shall advise the Scottish Ministers when such has been achieved.

2.13 Operations Commencement Date 1, Operations Commencement Date 2, Commencement of Service Date 1 and Commencement of Service Date 2

2.13.1 The Scottish Ministers will notify the Operating Company of Operations Commencement Date 1, Operations Commencement Date 2, Commencement of Service Date 1 and Commencement of Service Date 2.

2.13.2 The date notified for Operations Commencement Date 2 will be no greater than 12 months earlier than the programmed Commencement of Service Date 2 at the time of notification.

3. CLAUSE 3: CONTRACT DOCUMENTS

3.1 Interpretation of Contract Documents

3.1.1 The documents forming this Contract are to be taken as mutually explanatory of one another. For the purposes of interpretation, the priority of the documents shall be in accordance with the following sequence:

(i) the Agreement,

(ii) the Conditions of Contract (Schedule 1),

(iii) the Scottish Ministers' Requirements (Schedules 3 to 8),

(iv) the Scottish Ministers' Requirements (Schedule 9),

(v) Method of Measurement and Schedule of Rates and Prices (Schedule 2),

(vi) Clarifications and tender bulletins that have not been captured elsewhere in this Contract issued between the issue of the invitation to submit final tender and the contract award (Schedule 10),

(vii) documents required to be submitted under the invitation to submit final tender, by the Operating Company (Schedule 11), and

(viii) any other documents forming part of this Contract.

3.1.2 In the case of any conflict between the provisions of this Contract and the provisions of British Standard EN ISO 9001, British Standard EN ISO 14001, British Standard EN ISO 27001 and Occupational Health and Safety Management Systems Specification OHSAS 18001, the Operating Company shall advise the Director of such and shall comply with the decision of the Director as to which provision shall apply.

3.1.3 Where there is any conflict or ambiguity between this Contract and any Legislation, the Legislation shall take precedence over this Contract provided always that the Operating Company acknowledges that its obligations in respect of compliance with Legislation have been supplemented by provisions in this Contract. There shall be deemed to be no conflict or ambiguity between this Contract and any Legislation in

circumstances where the only conflict or ambiguity would (but for this Clause 3.1.3) be that any obligation stated in this Contract is more onerous than the corresponding provision in any Legislation. In circumstances where this Contract is more onerous, this Contract shall take precedence over the Legislation and the Operating Company shall comply with this Contract provided that the obligation in this Contract is not unlawful under the Legislation.

3.1.4 The Operating Company shall notify, and shall ensure and procure that all others for whom it is responsible (including the Designer, the Checker and the Road Safety Manager) notify, the Scottish Ministers of conflicts within or between documents forming this Contract.

3.1.5 Where there is any conflict within or between any of the documents forming the Scottish Ministers' Requirements, the Scottish Ministers will provide an interpretation that in their opinion ensures the safest and most conservative result. The Scottish Ministers will notify the Operating Company of that interpretation.

3.1.6 The Scottish Ministers will resolve any conflict notified to them within or between the *Design Manual for Roads and Bridges* and any other document forming part of the Scottish Ministers' Requirements.

3.1.7 In the case of any conflict within or between any documents supplied by the Operating Company for the purposes of this Contract, the Scottish Ministers will resolve such conflict after consultation with the Operating Company.

3.1.8 The Scottish Ministers will confirm to the Operating Company in writing their decision as to any interpretation of documents or any resolution of conflict within or between documents. Any such decision shall be binding upon the Operating Company. Any consequential alteration to the Operations shall be subject to the written consent of the Scottish Ministers.

3.1.9 The Operating Company is deemed to have made due allowance in the rates and prices contained in this Contract for complying with the requirements of this Clause 3.1 and no financial adjustment shall be made in respect of the application of or compliance with such requirements.

3.2 Provision of Documents

3.2.1 Following the execution of this Contract, the Scottish Ministers shall provide to the Operating Company one certified true copy of this Contract.

3.2.2 The Operating Company shall submit to the Scottish Ministers and the Performance Audit Group, in the manner and at the times detailed in this Contract, all documentation and other information (including files, reports, Drawings, calculations, data, and Records), whether provided by the Scottish Ministers or obtained or made by or on behalf of the Operating Company, including documentation and information held as Electronic Copy.

3.2.3 For the purposes of this Contract, all Electronic Copies to be provided by the Operating Company to the Director for archive purposes shall be provided in both the original software format and portable document format (pdf) on DVD-ROMs.

3.3 Drawings and Information

3.3.1 The Operating Company shall provide to the Scottish Ministers such information and Drawings concerning the Operating Company's proposals in respect of any Order as

are, in the Scottish Ministers' opinion, necessary for the proper execution of the Operations in accordance with this Contract. The Operating Company shall be bound by the information and Drawings so provided.

The Operating Company shall provide such information and Drawings as soon as practicable following any request or requirement to do so, and in any case at the time required in an Order or this Contract.

3.3.2 The Operating Company shall at all times keep in its Central Office at least one copy of all information and Drawings. Until the Central Office is established such will be kept in the interim central office as referred to in Schedule 5 Part 7. Such information and Drawings shall be available at all times for inspection and use by any person authorised under this Contract.

4. CLAUSE 4: CONTRACT OBLIGATIONS

4.1 General Obligations

4.1.1 The Operating Company shall undertake and complete all Operations in respect of the Unit in accordance with the terms of this Contract.

All activities, duties, obligations and responsibilities of the Operating Company set out in this Contract are Core Operations, unless stated as being subject to an Order. All activities, duties, obligations and responsibilities of the Operating Company set out in this Contract and stated as being subject to an Order are Ordered Operations.

The Operating Company shall provide everything necessary, whether of a temporary or permanent nature, including all resources required in and for Operations, so far as the necessity for such provision is specified in or can reasonably be inferred from any Order and this Contract.

Such resources shall include without limitation:

(i) the provision of all personnel of appropriate level of skill, competence and where necessary holding the appropriate formal qualifications,

(ii) the provision of all Constructional Plant,

(iii) the provision of all materials,

(iv) the provision of all offices, depots, stores and other such facilities, and

(v) the provision and maintenance of all temporary traffic management arrangements.

4.1.2 The Operating Company shall immediately take such action as necessary for the:

(i) saving of life,

(ii) protection of property,

(iii) safety of the Operations,

(iv) safety of users of the Unit, and

(v) safety and protection of the Unit.

4.1.3 During each Winter Service Period, all vehicles actively involved in maintenance and management Operations shall be fitted with winter tyres on all wheels.

4.1.4 If at any time the Scottish Ministers consider that any arrangements of the Operating Company are insufficient for the proper discharge of its obligations under this Contract, they will in writing notify the Operating Company, explaining why such a view is held. The Operating Company shall thereupon, at its own expense, take such remedial actions as necessary.

4.1.5 The Operating Company shall provide to the Director and the Performance Audit Group unrestricted access, and all necessary facilities and resources to permit the undertaking of such audits and inspections of the Operating Company's financial accounts, and other financial and cost records relating to this Contract, as the Director may consider necessary from time to time.

4.2 Operating Company Staff

4.2.1 Prior to Commencement of Service Date 1, the Operating Company shall prepare a register listing each member of the Operating Company's staff who is available to carry out Professional Services. Each such member of staff shall be allocated a title as referred to in Appendix 62/1 of the Specification.

The Operating Company shall submit the register of Professional Services staff to the Director for written consent.

4.2.2 Prior to Commencement of Service Date 1, the Operating Company shall prepare a register listing each member of the Operating Company's staff who may be utilised and paid for under the time work schedule - Series 6500 of Schedule 2 Parts 1 and 2.

Each member of staff shall be allocated a relevant title as referred to in Table 1 in Series 6500 of Schedule 2 Part 1.

4.2.3 The Operating Company shall maintain and update the registers referred to in Clause 4.2.1, Clause 4.2.2, and Clause 10.1.3 for the duration of the Contract Period.

Where applicable, the registers shall show the start and end dates of the period during which each member of staff was allocated each title.

The Operating Company shall, within five Working Days of the amendment being made, submit to the Director, for written consent, any amendment to the register of Professional Services staff.

4.2.4 All staff of the Operating Company and its sub-contractors and agents who are carrying out Operations on or adjacent to the Unit (but excluding staff who work solely within an office) shall have accreditation under the Construction Skills Certification Scheme. The Operating Company shall ensure that this requirement for all staff to have accreditation under the Construction Skills Certification Scheme shall apply to (and is adhered to by) all Works Contractors at the location of all Works.

4.3 Operating Company Responsibilities

4.3.1 The Operating Company shall exercise reasonable professional skill, care and diligence in carrying out and or procuring any Design and or in the performance of professional services forming part of the Operations and shall otherwise secure that the Operations meet the requirements of this Contract.

4.3.2 The Operating Company is responsible for the adequacy and safety of all Design, Operations, Defects Correction Operations, and other activities forming part of the Operations and is responsible for the coordination and integration of all Design.

4.3.3 No claim by the Operating Company is admissible on the ground that the Operating Company or any of its employees, agents, contractors, sub-contractors or suppliers (of any tier) or representatives relied upon any audit, inspection or supervision conducted, or any consent or approval issued or deemed issued, by or on behalf of the Scottish Ministers when signing any Certificate required to be provided under this Contract or when discharging any of its other obligations in accordance with this Contract.

4.3.4 The Operating Company is not entitled to rely on any such audit, inspection, supervision, consent or approval of the Scottish Ministers:

(i) when signing any Certificate required to be provided under this Contract,

(ii) when discharging any of its other obligations in accordance with this Contract, or

(iii) as a justification for failure to sign any such Certificate or discharge any of its other obligations in accordance with this Contract.

4.4 Addition and Removal of Things to and from the Unit

4.4.1 The Operating Company shall carry out Core Operations on any additions to the Unit made during the Contract Period. There shall be no adjustment to payments under this Contract either in respect of such additions or in respect of removal of things during the Contract Period, apart from those provided for under Schedule 2, Series 6700.

4.4.2 It is accepted by all Parties that the addition of Network 2 at Commencement of Service Date 2 shall not be regarded as an addition to what is understood by the Parties at Final Tender Submission.

4.5 Design, Design Checks and Certification

4.5.1 The Operating Company shall carry out Design required for Core Operations and for Ordered Operations. All Design shall be carried out in accordance with the requirements of this Contract:

(i) Design included within Core Operations is as follows:

(a) Design related to Damage to Crown Property with a value of repair of not more than £50,000,

(b) Design related to Category 1 Defects with a value of repair of not more than £10,000,

(c) Design for Schemes where the Estimated Construction Value of the Scheme is not more than £50,000, and

(d) Design required for all other Core Operations.

(ii) Design for Ordered Operations shall be as set out in an Order.

4.5.2 The Operating Company shall bear responsibility for a Design when (i) it has carried out the whole or any part of the Design itself or (ii), it has procured the carrying out on its behalf of the whole or any part of the Design.

If the Designer and Checker fail to agree on any matter relating to the Design or this Contract, the Operating Company shall, subject to the prior written consent of the Scottish Ministers, appoint and employ a person of appropriate professional skill expeditiously to resolve the matter.

The Director will consent to, or object to, such proposed appointment within 14 days of being requested to do so in writing by the Operating Company.

In the event that the Director so objects to such a proposed appointment, the Operating Company shall nominate another person, the appointment being subject to the foregoing provisions of this Clause 4.

4.5.3 The Operating Company shall complete, register and retain within the Central Office all Certificates (including associated data) and information (including Drawings, calculations and all other associated documents) required by this Contract in respect of the Operations for which the Operating Company has produced or procured a Design.

No part of any Operations on a Site in respect of a Design shall be commenced unless such completion and registration of Certificates has been effected.

The Director may require the Operating Company from time to time to provide to him and the Performance Audit Group copies of registers and other evidence of:

(i) registration,

(ii) Certificates (including associated data), and

(iii) information (including Drawings, calculations and all other associated documents).

4.5.4 Where, during the carrying out of any Operations for which the Operating Company has undertaken or procured a Design, the Operating Company encounters anything which invalidates any of the Design (or part of the Design) assumptions, or requires amendments to its method of Operations on a Site in respect of such Design (or part of the Design), it shall immediately notify the Director in writing of the matter.

As soon as practicable thereafter, the Operating Company shall submit in writing to the Director for his written consent details of any such amendments proposed to be made to such Design or Operations on a Site, and shall obtain an amending Order from the Director prior to making the proposed amendment. Such Order shall have no value.

The Operating Company shall provide any further information required or requested by the Director prior to, or as a condition of, any such grant of written consent before such written consent is granted.

All risks, including to all costs, time and Operations, in connection with and resulting from any such amendment to a Design or Operations pursuant to this clause shall be borne by the Operating Company.

4.5.5 To the extent that any Certificate requires the Operating Company and the Designer to certify that Operations for which the Operating Company has undertaken and or procured the Design (or any part of the Design) have been constructed, completed and maintained in accordance with this Contract, the Operating Company shall in undertaking the Operations ensure and procure that:

(i) both the Operating Company and the Designer supervise such Operations, including sampling and testing required by this Contract, in such a manner and to such extent as may be considered reasonable by the Director,

(ii) the Designer notifies the Operating Company in writing (providing copies simultaneously to the Director and the Performance Audit Group) of any change in the Operating Company's arrangements which are necessary in the opinion of the Designer for the proper discharge of the Operating Company's Design obligations in respect of this Contract, and

(iii) the Designer notifies the Operating Company in writing (providing copies simultaneously to the Director and the Performance Audit Group) of any sample and test which the Designer considers necessary in connection with this Contract and the Operating Company thereafter, as soon as reasonably practicable after such notification, executes any such sample, test and record and preserves in the Central Office all results thereof.

The Operating Company shall allow the Director and the Performance Audit Group to have unrestricted access at all times to the Central Office, the Premises, offices depots and all other places where work is prepared or executed or documents and Records are stored, including all personnel documentation and Records, in connection with any part of the Operations for inspection or audit. The Operating Company shall provide every assistance in ensuring such unrestricted access and shall make available all necessary resources to allow such inspection and or audit to be carried out and completed. On the written request of the Director or the Performance Audit Group, the Operating Company shall provide a copy of any Records to either or both the Director and the Performance Audit Group within seven days of such request.

4.5.6 Where additional work of Design arises as the unavoidable result of any Order, the Operating Company is bound to undertake and is responsible for such additional work of Design. The provisions of this Contract concerning Design apply to any such additional work of Design.

All costs in connection with and resulting from such additional Design shall be borne by the Operating Company where resulting from a Default by the Operating Company.

4.6 Sureties

4.6.1 The Operating Company shall, not later than 30 days prior to Commencement of Service Date 1, provide a Bond and Undertaking validly executed in a self proving manner by an insurance company or bank in the sum of £2,000,000.

The Bond and Undertaking shall be provided by an insurance company or bank acceptable to the Scottish Ministers and shall be in the form of the Bond and Undertaking contained in and forming Schedule 1, Annex 2, or otherwise acceptable to the Scottish Ministers.

The Bond and Undertaking shall be in place until the end of the Contract Period or the settlement of the final account, whichever is the later except in respect of any demand in writing made before such date.

Prior to preparing the execution of the Bond and Undertaking, the Operating Company shall submit the proposed Bond and Undertaking, including the name of the guarantor, for the prior written acceptance of the Scottish Ministers.

The obtaining of the Bond and Undertaking and all costs incurred thereby are the responsibility of the Operating Company.

4.7 Inspection of the Unit

4.7.1 The Operating Company shall make and keep itself familiar with the Unit.

4.8 Operations to the Satisfaction of Scottish Ministers

4.8.1 Everything to be provided by the Operating Company in respect of this Contract, including the mode, manner and speed of executing the Operations, shall be of a kind and conducted in such a manner as is to the satisfaction of the Scottish Ministers.

4.9 Setting Out

4.9.1 The Operating Company shall be responsible for:

(i) the proper setting-out of work executed in carrying out the Operations,

(ii) the correctness of the position, levels, dimensions and alignment of all parts of such work, and

(iii) the provision of all necessary resources in connection therewith.

If, at any time during the Contract Period, any error appears or arises in the setting out, position, levels, dimensions or alignment of any part of such work, the Operating Company shall at its own cost rectify such error and any consequences whatsoever of such error.

Any monitoring by the Scottish Ministers of any setting-out or of any position, levels, dimensions or alignment shall not in any way relieve the Operating Company of its responsibility for the correctness of such setting-out or of any line or level in accordance with this Contract.

4.10 Safety and Security

4.10.1 The Operating Company shall, throughout the progress of the Operations, ensure the safety of all persons entitled to be upon the Unit (so far as such safety is under its control). Accordingly, the Operating Company shall keep the Unit (so far as the Unit is under its control) in an orderly and tidy state, in order to avoid danger to such persons.

4.10.2 The Operating Company shall, in connection with the Operations, provide and maintain, at its own cost, all lights, guards, fencing, warning signs and watching and security systems controlling access, when and where deemed necessary by the Scottish Ministers, Undertakers, any Statutory Authorities or any other authority for the protection of the Operations or for the safety and convenience of all third parties including the public and all other persons, companies, firms and other organisations entitled to be on the Unit. No less than 30 days prior to Commencement of Service Date 1, the Operating Company shall, following a review of any historic FETA policies and procedures and in accordance with the requirements of Schedule 7 Part 7, submit to the Director for his written consent, a draft Security Patrol Plan covering the full extent of the Unit and shall update the said Plan to take account of Network 2

and submit it to the Director for his written consent no less than 30 days prior to Commencement of Service Date 2. The Security Patrol Plan shall include, where relevant, all information and data supplied by the Director and shall be continuously maintained, updated and improved by the Operating Company.

The Operating Company shall update the Security Patrol Plan and re-issue it to the Director for consent, or issue a statement that the plan has been reviewed and that no update is required, no later than 10 Working days prior to the end of each Annual Period.

The Operating Company will comply at all times with the procedures set out in the Security Patrol Plan

4.10.3 Where the Scottish Ministers execute work themselves or employ other contractors and similar organisations to execute work on the Unit, they will, in respect of such work:

(i) ensure, and procure that any such contractors and similar organisations ensure, the safety of all persons entitled to be upon the Unit,

(ii) liaise, and procure that any such contractors and similar organisations liaise, with the Operating Company in respect of their activities on the Unit, and

(iii) keep, and procure that any such contractors and similar organisations keep, the Unit in an orderly and tidy state appropriate to the avoidance of danger to such persons.

4.11 Operating Company's Superintendence

4.11.1 The Operating Company shall provide all necessary superintendence during the execution of Operations and as long thereafter as required by this Contract.

Such superintendence shall be undertaken by a sufficient number of persons, all of whom shall have sufficient knowledge of the Operations to be executed (including the methods and techniques required, the hazards likely to be encountered and methods of preventing accidents) for the execution of the Operations to the satisfaction of the Director.

4.11.2 The Operating Company shall nominate to the Director in writing, for written consent, competent and available persons of appropriate professional skill to act as the Contract Administrator, in accordance with the form of Works Contract used, in all Works Contracts.

4.12 Clearance During and on Completion of Operations

4.12.1 The Operating Company shall, in the course of undertaking Operations, take all necessary measures to keep the Unit free from all Constructional Plant and vehicles not required for the Operations, surplus materials, rubbish and any obstruction to the free flow of pedestrian and vehicular traffic.

On the completion of Operations and at the Service End Date, subject to Clause 11.1.10, the Operating Company shall return the Unit, all depots, buildings and areas made available to the Operating Company in the condition required by this Contract and clear away and remove from the Unit all Constructional Plant, materials, rubbish, temporary work of every kind and traffic management equipment,

goods or materials, and leave the whole of the Unit clean and in a workmanlike condition, to the satisfaction of the Scottish Ministers.

4.13 Discrimination

4.13.1 The Operating Company shall not discriminate unlawfully in any matter relating to employment.

4.13.2 The Operating Company shall take all reasonable steps to secure that none of its contractors, sub-contractors, suppliers (of whatever tier), agents, employees and other persons engaged by it in any capacity whatsoever in the execution of this Contract discriminates unlawfully in any matter relating to employment.

4.14 Motorway Passes and Keys

4.14.1 In recognition of the potential danger of the environment, Operations on motorways shall generally be undertaken within the protection of traffic management arrangements.

However, in some situations, Operations off the carriageways of motorways can be undertaken safely without traffic management arrangements. In such situations, the Operating Company shall apply in advance to the Director for special authority for any persons so to work. Such authority will be given by the Scottish Ministers by the issue of a motorway pass.

The Operating Company shall take responsibility for:

(i) training of any of its employees, and any of the employees of its sub-contractors, who are to work on motorways within the Unit,

(ii) the planning and management of any activity on such motorways, and

(iii) the actions of such employees when working on such motorways.

All applications from the Operating Company for motorway passes shall be made on a standard pro forma provided by the Director. Such requests shall specifically identify:

(i) the name of the person for whom the application is made,

(ii) the activity to be undertaken and the section of motorway to which it relates,

(iii) the start and end dates of the period for which the application is made,

(iv) the reason why the activity is being proposed without traffic management,

(v) how the individual shall operate when on the motorway, and

(vi) the specific training on the health and safety risks that has been given to that person.

Motorway passes issued by the Director allow relaxation under *Motorways Traffic (Scotland) Regulations 1995* in accordance with the terms of the application and the pass. The Operating Company shall ensure and procure that no other motorway working without traffic management arrangements is undertaken.

All Operations accessed using a motorway pass shall be planned and logged. The local police control room shall be informed prior to any such Operations being undertaken.

4.14.2 Where the Operating Company requires access to unattended locked premises within the Unit, it shall apply to the Director in writing for such access. The Director will provide keys to the Operating Company, which is thereafter responsible for their safe keeping.

Such keys shall be surrendered immediately upon written request from the Director and in any event at the Termination Date. Loss of a key shall be reported immediately to the Director, to enable security precautions to be implemented.

5. CLAUSE 5: ACCESS, INSPECTION PROCESS, COMPLETION OF ORDERS AND DEFECTS CORRECTION

5.1 Access and Provision of Facilities

5.1.1 The Scottish Ministers, the Performance Audit Group and any other person authorised by the Scottish Ministers (including other contractors and other third parties) shall at all times have unrestricted access at all times to the Operations and to the Unit and to the Premises and to all files, documents, information and all other data produced by the Operating Company as part of, or in connection with, the execution of the Operations without any requirement for prior notice.

Such access shall at all times include access to the Premises, the Central Office, subordinate offices, depots and workshops belonging to, or under the control of, the Operating Company and all places where work is being prepared or executed or documents and Records stored, materials are being manufactured or articles and machinery are being obtained for, or in connection with, the Operations.

The Operating Company shall afford every facility for, and every assistance in obtaining, such access and or shall procure that such access is granted.

5.2 Rate of Progress

5.2.1 Where, for any reason that does not entitle the Operating Company to an extension of time, the rate of progress of all or any of the Operations is at any time in the opinion of the Scottish Ministers too slow to ensure completion of the relevant Operations by the time prescribed in this Contract or any Order or by the extended time for completion referred to in this Contract, the Scottish Ministers shall so notify the Operating Company in writing.

The Operating Company shall thereupon take such measures as necessary and to which the Scottish Ministers consent to expedite progress to allow completion of those Operations by the prescribed time or extended time.

The Operating Company is not entitled to any additional payment for taking measures required under this clause.

5.3 Completion Certificates and Notification of Completion of Schemes

5.3.1 For each Scheme, the Operating Company shall, within five Working Days of:

(i) completion of the whole of the Operations required for a Scheme, and

(ii) these Operations having passed any final test required by this Contract,

issue to the Scottish Ministers a Certificate, in the form shown in Schedule 6 Part 4, stating the date on which the Operating Company has, in its opinion, completed its

obligations, for that Scheme, to execute Operations covered by the relevant Order in accordance with this Contract.

5.3.2 For each Scheme, the Operating Company shall, within five Working Days of:

(i) completion of the whole of the Operations required for a Scheme, and

(ii) these Operations having passed any final test required by this Contract,

record such completion and passage of final tests within the contract control and management function of the Integrated Roads Information System.

5.4 Examination of Work before Covering Up

5.4.1 Where required in writing by the Director, the Operating Company shall ensure that no part of the Operations is covered up or put out of view without the prior written consent of the Director.

The Operating Company shall afford every opportunity to the Director to:

(i) examine or measure any work which is about to be covered up or put out of view, and

(ii) examine foundations and other constructed elements before permanent work is placed on them.

The Operating Company shall provide written notice to the Director whenever any such work or foundation is ready or about to be ready for such examination. On receipt of such notice, the Director will, if he wishes to make such examination, without unreasonable delay and in writing notify the Operating Company accordingly, and make such examination.

5.4.2 The Operating Company shall, when required by the Scottish Ministers under any Order:

(i) uncover any part or parts of the Operations,

(ii) make openings in or through any part or parts,

(iii) carry out searches, inspections, investigations, tests and trials, and

(iv) reinstate and make good any part or parts to the satisfaction of the Scottish Ministers.

If any such part or parts have been covered up or put out of view and are found to have been executed in accordance with this Contract, the cost of such uncovering, making of openings, carrying out searches, inspections, investigations, tests or trials, reinstating and making good shall, subject as aftermentioned, be borne by the Scottish Ministers but in all other cases all such costs shall be borne by the Operating Company

Where the Scottish Ministers issue an Order in accordance with this Clause 5.4.2 in circumstances where in their opinion it is reasonable to do so as the results of previous uncoverings, making of openings, searches, inspections, tests or trails of other parts of the Operations have shown that Operations or any part thereof have not been carried out in accordance with this Contract, the associated costs (including as a minimum the costs of reinstatement and making good) shall be borne by the Operating Company whatever the results.

5.5 Operating Company to Determine Cause of Defects.

5.5.1 The Operating Company shall, where subject to an Order during Mobilisation Period 1, Mobilisation Period 2, Service Delivery Period 1, Service Delivery Period 2, Annual Periods, and Non-Conformance Liability Period, execute such searches, inspections, investigations, tests and trials as necessary to determine the cause of any Defect and to carry out such Defects Correction Operations as required by the Scottish Ministers.

Where such Defect is a Non-Conformance or is the result of a Non-Conformance, the cost of all such searches, inspections, investigations, tests, trials and Defects Correction Operations shall be borne by the Operating Company.

Where such Defect is not:

(i) a Non-Conformance or a result of a Non- Conformance,

(ii) a Category 1 Defect with a value of repair of no more than £10,000, or

(iii) Damage to Crown Property with a value of repair of no more than £50,000,

the value of all such searches, inspections, investigations, tests, trials and Defects Correction Operations executed by the Operating Company shall subject as aftermentioned be ascertained in accordance with Clause 10 for payment to the Operating Company in accordance with this Contract. Where such searches, inspections, investigations, tests and trials have shown there to be a Defect which is a Non-Conformance or a Defect which is the result of a Non-Conformance, the Scottish Ministers may subject to an Order require further such searches, inspections, investigations, tests and trials on any part of the Unit where in their opinion it is reasonable to do so. The costs of such, (including as a minimum the costs of reinstatement and making good) shall be borne by the Operating Company whatever the results.

5.6 Urgent Repairs

5.6.1 Where at any time, in the opinion of the Scottish Ministers, any Defects Correction Operations or other action, work or repair needs to be urgently executed in connection with or arising out of the Operations (including where the Scottish Ministers deem there to be any immediate threat to public safety), the Scottish Ministers are entitled, subject to the provisions of Clause 5.6.4, to execute themselves, or to employ other persons to execute, such Defects Correction Operations or other action, work or repair.

5.6.2 The Scottish Ministers will, as soon as reasonably practicable following their decision to exercise their entitlement under Clause 5.6.1, notify the Operating Company in writing of such decision and provide details within any such notice of the Defects Correction Operations or other action, work or repair to be executed or which has already been executed by them, or on their behalf.

Any such notice shall not be deemed to be a Remedial Notice, whether or not the requirement for such Defects Correction Operations or other action, work or repair occurs because of the Default of the Operating Company.

5.6.3 Where the Scottish Ministers execute, or arrange for the execution of, Defects Correction Operations or other action, work or repair under Clause 5.6.1 or Clause 5.6.5 and in their opinion the Operating Company was liable to execute it at its own

expense, all costs and expenses properly incurred by the Scottish Ministers in the execution shall be, at the option of the Scottish Ministers, either:

(i) recoverable on demand from the Operating Company as a debt due to the Scottish Ministers, or

(ii) deducted by the Scottish Ministers from the next payment or any subsequent payment due, to the Operating Company under this Contract.

The Scottish Ministers will notify the Operating Company in writing of such costs and expenses prior to any such demand or deduction by them.

5.6.4 In the period to the Termination Date the Scottish Ministers are only entitled to execute, or employ other persons to execute, any Defects Correction Operations or other action, work or repair required under Clause 5.6.1 if in their opinion (acting reasonably in all the circumstances) the Operating Company is unable or unwilling to execute the same within the timescales which the Scottish Ministers deem to be necessary in the particular circumstances.

5.6.5 If, in the event of circumstances arising to which the provisions of Clause 5.6.1 apply, the Scottish Ministers either do not opt to, or pursuant to Clause 5.6.4 are not entitled to, exercise their option in terms of Clause 5.6.1 to execute or employ other persons to execute any Defects Correction Operations or other action, work or repair required, they will issue an Order to the Operating Company requiring the Operating Company to execute and complete the Defects Correction Operations or other action, work or repair required.

In respect of any such Order, the Operating Company is not entitled to any extension of time under Clause 8 unless the delay is caused by the actions of the Scottish Ministers. If the Operating Company does not execute and complete the Defects Correction Operations or other action, work or repair required in terms of such Order, the Scottish Ministers are entitled, without further notice to the Operating Company, themselves to execute, or employ other persons to execute, such Defects Correction Operations, other action, work, or repair, and to demand of, or deduct from amounts due to the Operating Company, the whole costs and expenses incurred by the Scottish Ministers in terms of and in the manner described in Clause 5.6.3.

5.7 Removal of Improper Work and Materials

5.7.1 The Scottish Ministers may, during the progress of the Operations, issue an Order requiring:

(i) the removal from the Unit within such time or times as may be specified in such Order of any materials that, in the opinion of the Scottish Ministers, are not in accordance with this Contract and the substitution of proper and suitable materials for such non-compliant materials, or

(ii) the removal and proper re-execution (notwithstanding any previous test thereof or interim payment therefore) of any work that, in the opinion of the Scottish Ministers, in respect of materials or workmanship is not in accordance with this Contract.

All costs in relation to such Orders shall be borne by the Operating Company.

5.7.2 The failure of the Scottish Ministers, or any person acting for them pursuant to the other provisions of this Contract, to reject or disapprove any work or materials shall not prejudice the power of the Scottish Ministers, or any person acting for them, subsequently to reject or disapprove such work or materials.

5.8 Correction of Defects

5.8.1 To ensure that the Operations executed under this Contract are in the condition required by this Contract (fair wear and tear excepted) at the expiry of the relevant Defects Correction Period, or as soon as practicable thereafter, the Operating Company shall:

(i) search for, undertake inspections and investigations concerning, and record, in accordance with the Scottish Ministers' Requirements, all Defects that occur during the relevant Defects Correction Period,

(ii) execute and record all Defects Correction Operations in accordance with the other provisions of this Contract,

(iii) execute and record, in accordance with the Scottish Ministers' Requirements, any Defects Correction Operations that, within 14 days after expiration of the relevant Defects Correction Period, are required of, and notified to, the Operating Company in writing by the Scottish Ministers,

(iv) maintain, in accordance with the Scottish Ministers' Requirements, Records and registers of all the activities referred to in this clause, and

(v) provide from time to time, to the Director and the Performance Audit Group, copies of such Records and registers, within 21 days of any request.

5.8.2 Defects Correction Operations shall be carried out by the Operating Company at its own expense where, in the opinion of the Scottish Ministers, the relevant Defect is a Non-Conformance.

5.8.3 Where the Operating Company fails to execute, or fails to execute within the time specified in terms of this Contract, any necessary Defects Correction Operations required by this Contract or the Scottish Ministers, the Scottish Ministers are entitled to:

(i) execute such Defects Correction Operations themselves, or

(ii) arrange for the execution of the Defects Correction Operations by other contractors.

Where such Defects Correction Operations relate to a Non-Conformance, the Scottish Ministers are entitled, at their option, either to:

(i) recover from the Operating Company the costs incurred by the Scottish Ministers in connection with execution of the Defects Correction Operations, either on demand from the Operating Company as a debt due to the Scottish Ministers, or

(ii) deduct the amount of these costs from the next payment or any subsequent payment, due, to the Operating Company under this Contract.

5.9 Defects Correction Certificate

5.9.1 Upon the expiry of each Defects Correction Period, and when all relevant Defects Correction Operations referred to in Clause 5.5.1 and Clauses 5.8.1 to 5.8.3 have

been completed, the Operating Company shall issue to the Scottish Ministers, in a form to be consented to by the Director, a Certificate stating the date on which the Operating Company has, in its opinion, completed its obligations to execute Defects Correction Operations in connection with the Operations covered by the relevant Order in accordance with this Contract.

5.9.2 The issue of this Certificate does not relieve either the Operating Company or the Scottish Ministers from any liability arising out of, or in any way connected with, the performance of their respective obligations under this Contract.

5.10 Non-Conformance Liability Period

5.10.1 During the Non-Conformance Liability Period, the Scottish Ministers may make their own investigations and employ their own workmen and other contractors to execute searches, inspections and investigations for all Non-Conformances, and may execute any necessary Defects Correction Operations themselves or arrange for execution by other contractors. The execution of such searches, inspections and investigations shall be audited by the Performance Audit Group or such other person or body as authorised from time to time by the Scottish Ministers.

5.10.2 The Scottish Ministers will give at least 14 days' notice in writing to the Operating Company, stating the intended dates, times and locations of any such searches, inspections or investigations. The Operating Company has the right to witness these searches, inspections or investigations.

5.10.3 Within such period as is considered reasonable by the Scottish Ministers after the date of completion of each such search, inspection or investigation, the Scottish Ministers will deliver to the Operating Company a list of any resulting necessary Defects Correction Operations.

5.10.4 The value of the work undertaken in searching, inspecting, or investigating for Non-Conformances and undertaking any Defects Correction Operations under Clauses 5.10.1 to 5.10.3 shall be ascertained by the Scottish Ministers as if, such work had been the requirements of an Order issued under this Contract.

5.10.5 The Scottish Ministers shall provide the valuation of such work to the Operating Company within seven days of completion of any such Defects Correction Operations. The amounts of all such valuations are recoverable by the Scottish Ministers from the Operating Company under this Contract.

5.11 Removal of Operating Company's Employees

5.11.1 The Operating Company shall employ or cause to be employed only persons who are careful, skilled and experienced in their several trades and callings.

The Scottish Ministers are entitled to object to, and may at any time require the Operating Company to remove from the execution of the Operations by written notice to such effect to the Operating Company, any person employed thereon who, in the opinion of the Scottish Ministers, has:

(i) misconducted himself,

(ii) been incompetent,

(iii) been negligent in the performance of his duties,

(iv) failed to conform with any particular provisions with regard to safety set out in this Contract, or

(v) persisted in any conduct that is prejudicial to safety or health.

5.11.2 The Operating Company:

(i) shall immediately comply with any such requirement (or, where appropriate, ensure and procure that any subcontractor (of any tier) of, or supplier (of any tier) to the Operating Company complies with such requirement), and

(ii) shall ensure and procure that such person is not again engaged by the Operating Company (or any subcontractor (of any tier) of, or supplier (of any tier) to the Operating Company) in any capacity upon the Unit or in respect of the Operations, without the prior written permission of the Scottish Ministers.

5.11.3 In the event of any such removal, the Operating Company shall not delay, suspend, terminate or withhold the performance of any of its obligations under this Contract and shall remain bound to implement its obligations in full.

5.11.4 The Scottish Ministers shall have no liability to the Operating Company in respect of any costs or expenses incurred by the Operating Company as a result of any requirements of the Scottish Ministers pursuant to Clauses 5.11.1 to 5.11.3.

SCHEDULE 1

PART 2 – PERIODS AND PROGRAMMES

6. CLAUSE 6: PERIODS AND PROGRAMMES

6.1 Mobilisation Period 1

6.1.1 The Scottish Ministers are entitled to issue Orders during Mobilisation Period 1.

6.1.2 Any Orders issued prior to the availability of the contract control and management function of the Integrated Roads Information System will be:

(i) issued in writing independently of the contract control and management function of the Integrated Roads Information System, and

(ii) subsequently transmitted to the Operating Company by the Director via the contract control and management function of the Integrated Roads Information System after it becomes operational.

6.1.3 During Mobilisation Period 1 the Operating Company shall acquire the capacity to execute the Operations in accordance with the provisions of this Contract and of any issued Orders.

6.1.4 The Operating Company shall not later than 60 days prior to Commencement of Service Date 1 establish within the geographical area served by the Unit, at the locations required by this Contract:

(i) all sub-offices necessary to allow the Operating Company to fulfil its obligations under this Contract, and

(ii) all depots and other facilities necessary to allow the Operating Company to fulfil its Operations under this Contract,

all in terms of this Contract.

6.1.5 The Operating Company shall comply with the requirements of Schedule 5 Part 7 and any agreement(s) for lease entered into by the Scottish Ministers with the Operating Company regarding establishment of the Central Office.

6.1.6 In accordance with the requirements of Schedule 5 Part 4, the Operating Company shall appoint a Mobilisation Manager to undertake the duties listed in this Clause 6.1 commencing on the first day of Mobilisation Period 1.

6.1.7 During Mobilisation Period 1, the Mobilisation Manager shall:

(i) liaise with FETA and agree arrangements for providing the Operating Company's personnel with access to the Premises to allow the Operating Company to comply with the requirements stated in Schedule 5 Part 7 in relation to the Central Office and the control room,

(ii) liaise with FETA and the Director regarding the structure, content and functionality of the Operating Company's Unit-specific website, and make proposals to the Director for his consent for the structure, content and functionality no later than 30 days prior to Commencement of Service Date 1. Such structure, content and functionality shall as a minimum accord with the requirements in Schedule 3 Part 6. The Director will consider the

Operating Company's proposals and will either give his consent or request amended proposals from the Operating Company,

(iii) on receipt of the Director's consent to the proposals for the Unit-specific website, ensure that it is created and launched no later than 30 days after Commencement of Service Date 1,

(iv) liaise with FETA to identify and agree a suitable programme of training for FETA staff. The programme shall include the details, timetable and location for such training,

(v) submit the training programme agreed with FETA to the Director for his consent no less than 90 days prior to Commencement of Service Date 1,

(vi) following receipt of such consent, undertake the training programme and provide evidence to the Director's satisfaction that such training programme has been complied with and completed within 10 Working Days of such training being completed, and

(vii) review all historic FETA operations procedures, inspection procedures, emergency procedures, maintenance procedures, safety procedures and patrol procedures including as a minimum those listed in Schedule 5 Part 1 and make recommendations to the Director for his written consent on any changes required to meet the requirements of this Contract. Recommendations shall be submitted to the Director no later than 90 days prior to Commencement of Service Date 1.

6.2 Mobilisation Period 2

6.2.1 In accordance with the requirements of Schedule 5 Part 4, the Operating Company shall appoint a Mobilisation Manager to undertake the duties listed in this Clause 6.2.2 commencing on the first day of Mobilisation Period 2.

6.2.2 The Mobilisation Manager shall:

(i) submit proposals for restructuring the Operating Company's staff structure in order to accommodate the changes required to reflect the wider scope of Operations connected with Network 2; such proposals shall be submitted to the Director for consent no later than 6 months prior to Commencement of Service Date 2. The Director will consider such proposals and will either give his consent or request amended proposals,

(ii) submit proposals for updating the Operating Company's Unit-specific website to incorporate details relevant to Network 2 to the Director for consent no later than 60 days prior to Commencement of Service Date 2.The Director will consider such proposals and will either give his consent or request amended proposals,

(iii) on receipt of the Director's consent, ensure that the Unit-specific website is updated with effect from Commencement of Service Date 2,

(iv) no later than six months prior to Commencement of Service Date 2 and in liaison with the Major Bridge Manager (Queensferry Crossing), ensure that the Operating Company fully understands the extent of all warranties and guarantees for the Queensferry Crossing and that its Management System

ensures that these warranties and guarantees shall not be invalidated by any Operations without the prior consent of the Scottish Ministers,

(v) no later than six months prior to Commencement of Service Date 2, using any information issued by the Director to the Operating Company make proposals to the Director for his consent on the timing, details and location for the appropriate Operating Company's personnel to receive training from FCBC in relation to the various systems required to operate the Queensferry Crossing and any other matters relevant to the operation of the Queensferry Crossing,

(vi) following receipt of such consent undertake the training programme and provide evidence to the Director's satisfaction that such training has been complied with and completed within 10 Working Days of such training having been completed, and

(vii) continually review all information received by the Director from FCBC including as a minimum, documents, information, as built drawings, operations procedures, emergency procedures, maintenance procedures, safety procedures and patrol procedures and make recommendations to the Director for his written consent on any changes required to meet the requirements of this Contract such including as a minimum the formulation of the procedures and plans to be prepared by the Operating Company. Recommendations shall be submitted to the Director no later than 90 days prior to Commencement of Service Date 2.

6.3 Execution of Operations

6.3.1 The Operating Company shall execute the Operations from Operations Commencement Date 1 until the Service End Date or within the Non-Conformance Liability Period as required by the other provisions of this Contract.

6.3.2 The Operating Company shall from 00:00 hours on Commencement of Service Date 1 until 00:00 hours on the day after the Service End Date take full responsibility for:

(i) the care of the Unit,

(ii) the care of the Operations, and

(iii) the safety of all persons entitled to be upon the Unit (so far as such safety is, or should be, within the control of the Operating Company).

6.3.3 The Scottish Ministers may at their discretion extend Service Delivery Period 2 beyond the Initial Service End Date, to a later Service End Date, by a period or a number of periods up to a total extension not exceeding five years, by giving written notice to the Operating Company.

Such a notice shall be termed a "Notice of Extension".

Where the Scottish Ministers wish to exercise their discretion to extend Service Delivery Period 2, they shall issue a Notice of Extension in writing to the Operating Company:

(i) no later than 12 months before the Initial Service End Date, or

(ii) if Service Delivery Period 2 has already been extended by the giving of a Notice of Extension in accordance with this Clause 6, no later than 12 weeks before the Service End Date,

specifying within such Notice of Extension the period by which Service Delivery Period 2 is extended.

6.3.4 The Operating Company may at its option waive the requirements stated in Clause 6.3.3 for notice periods.

6.4 Preparation of Programmes

6.4.1 The Operating Company shall prepare programmes for the Operations and submit them to the Scottish Ministers in accordance with the requirements of this Contract.

6.5 Revision of Programmes

6.5.1 If at any time the Scottish Ministers consider that the actual progress of any part of the Operations does not comply with any programmes, times, or dates forming part of any Order or of any requirement of this Contract, the Scottish Ministers shall issue an Order to the Operating Company requiring it to produce a revised programme or times showing the modification to the original programme or times necessary to ensure the completion of the Operations in accordance with such programmes or times.

Any costs associated with such revisions to programme or times shall be borne by the Operating Company.

6.6 Methods

6.6.1 Where required by the Scottish Ministers, the Operating Company shall submit, at such times as the Scottish Ministers may require, all information pertaining to the proposed methods for execution of the Operations.

Any such submission shall be sufficiently detailed to enable the Scottish Ministers to assess whether the proposed methods are adequate for execution of the Operations in accordance with this Contract.

6.7 Scottish Ministers' Consent

6.7.1 Within a reasonable period after receipt of any submission in accordance with Clause 6.5.1, the Scottish Ministers will notify the Operating Company in writing whether or not they consent to the Operating Company's proposed methods for the execution of the Operations.

6.7.2 In the event that the Scottish Ministers do not consent to any such proposed methods, they will:

(i) with their notice withholding consent, notify the Operating Company of the respects in which (in the opinion of the Scottish Ministers) the proposed methods fail to meet the requirements of this Contract, and

(ii) subsequently issue an Order to the Operating Company to make such changes in the methods as may be necessary to meet the Scottish Ministers' Requirements and to obtain their consent.

The costs for executing any such Order shall be borne by the Operating Company.

SCHEDULE 1

PART 3 – ORDERS, EXTENSIONS OF TIME, MEASUREMENT AND PAYMENT PROVISIONS

7. CLAUSE 7: BIDS, SCHEMES, ORDERS AND THRESHOLD VALUES

7.1 General

7.1.1 Subject to the other provisions of this Contract, Bids shall comply with the requirements of Schedule 4 Part 1.

7.1.2 Bids shall, when subject to an Order, be in accordance with the Order to which they relate.

7.1.3 Estimated Bid Values shall be in accordance with Schedule 4 Part 1, Annex 4.1/G of this Contract, and provided irrespective of the value of work involved and the Threshold Values given in this Contract.

7.1.4 Bids shall remain open for acceptance by the Scottish Ministers for 63 days from the date of receipt of the Bid by the Scottish Ministers.

7.1.5 The Scottish Ministers may issue an Order to the Operating Company requiring the Operating Company to provide a Bid for Operations under consideration but not yet ordered. The Bid shall be provided within the time period given in the Order or when no time period is given in an Order, the Bid shall be submitted within 28 days.

7.2 Orders, Schemes, Threshold Values, Bids

7.2.1 The Scottish Ministers may from time to time during the Contract Period issue Orders to the Operating Company under this Contract.

Such Orders shall, subject to Clause 7.2.9, relate to the Unit and may include, without prejudice to the generality of the foregoing:

(i) executing work,

(ii) making additions, omissions, substitutions, alterations or changes in quality, form, character, timing or kind, relative to those referred to in the Scottish Ministers' Requirements,

(iii) making additions, omissions, substitutions, alterations or changes to the extent of the Unit,

(iv) making changes to the Scottish Ministers' Requirements pursuant to Clause 14.1,

(v) executing Operations relating to Non-Conformances,

(vi) entering into a contract with a third party (or parties) for the execution of work or of supply, and

(vii) executing such other Operations, activities, duties and responsibilities by the Operating Company as the Scottish Ministers may require to place on the Operating Company.

7.2.2 Subject to the other provisions of this Contract, for any Scheme with an Estimated Bid Value of not more than £5,000,000, the Scottish Ministers may from time to time

issue Order(s) to the Operating Company to execute Operations and the Operating Company shall execute such Operations for any such Scheme.

Subject to the other provisions of this Contract, Operations for any such Scheme may include any operations, activities, duties and responsibilities in connection with the management and maintenance of the Trunk Road network as the Scottish Ministers may at their discretion place on the Operating Company.

7.2.3 For Schemes with an Estimated Bid Value of less than (i) £750,000 for either the Forth Road Bridge or the Queensferry Crossing or (ii) £350,000 otherwise, subject to an Order, the Operating Company shall undertake the Ordered Operations.

The Scottish Ministers reserve the right to instruct the Operating Company to procure Works Contracts for Schemes with an Estimated Bid Value of less than (i) £750,000 for either the Forth Road Bridge or the Queensferry Crossing or (ii) £350,000 otherwise in accordance with the provisions of Clause 7.2.4 (ii) or (iii).

7.2.4 For Schemes with an Estimated Bid Value of (i) more than £750,000 and less than £5,000,000 for the Forth Road Bridge or the Queensferry Crossing or (ii) more than £350,000 and less than £5,000,000 otherwise, the Scottish Ministers may proceed with one of the following procurement options:

(i) issue an Order or Orders to the Operating Company to undertake the work as Ordered Operations, or

(ii) issue an Order to the Operating Company to provide Professional Services and or undertake all work necessary for procurement of the work by the Scottish Ministers under a Works Contract, or

(iii) issue an Order to the Operating Company to provide all assistance to third parties to enable the Scottish Ministers to procure the Scheme using third parties.

7.2.5 Where a Scheme is to be procured by a Works Contract under Clause 7.2.4 (ii), the Operating Company, in addition to its other obligations under this Contract, shall if so ordered:

(i) assist the Director to undertake a pre-qualification process,

(ii) prepare all necessary tender documentation, and

(iii) undertake the role of Contract Administrator during the construction stage.

7.2.6 For Schemes with an Estimated Bid Value of more than £5,000,000 the Scottish Ministers at their discretion may:

(i) Issue an Order, requiring the Operating Company to provide Professional Services necessary for a subsequent Works Contract procured by the Scottish Ministers,

(ii) Issue an Order, requiring the Operating Company to undertake the work as Operations,

(iii) procure the Scheme or similar work under separate contracts with others, or

(iv) not proceed with the Scheme.

7.2.7 The values given in Clauses 7.2.2, 7.2.3, 7.2.4 and 7.2.6 above are Threshold Values which may be revised from time to time by the Scottish Ministers.

7.2.8 The Scottish Ministers may at their discretion issue Order(s) that combine individual Schemes, or combine individual Schemes with potential individual Schemes, or combine potential individual Schemes.

Where individual Schemes are combined into a new single Scheme and their combined Estimated Bid Value falls within the Threshold Values stated in Clause 7.2.3 or 7.2.4, the Scottish Ministers may proceed in accordance with Clause 7.2.3 or 7.2.4 as appropriate for the single Scheme. The Operating Company shall execute Operations for the single Scheme in compliance with the Orders of the Scottish Ministers.

7.2.9 The Scottish Ministers may, at their discretion, issue Order(s) for the Operating Company to execute operations, activities, duties and responsibilities in any other part of the Trunk Road network outside the boundary of the Unit.

Such operations, activities, duties and responsibilities outside the Unit are likely to be ordered at and require execution at little or no notice by the Operating Company and such Operations may require:

(i) resources to be provided within the timescale stated in the Order by the Operating Company, and

(ii) immediate diversion of part of the Operating Company's existing resources employed elsewhere in the Unit.

For the purposes of this Clause and operation of this Contract, all such operations, activities and responsibilities that are subject to an Order under this Clause shall be deemed to be Operations.

7.2.10 The Scottish Ministers will within 28 days of the date of receipt of a Bid notify the Operating Company in writing of the actions proposed, with respect to such Scheme.

7.2.11 The Scottish Ministers may, at their discretion, issue Order(s) pursuant to the other provisions of this Contract for the Operating Company to execute any or all of the following:

(i) feasibility studies,

(ii) technical investigations including but not limited to further investigations as defined in the *Design Manual for Roads and Bridges*,

(iii) Structures assessments, and

(iv) Design,

for any such Operations activities duties and responsibilities that shall be the subject of a separate competitive tender as referred to in Clause 7.2.4 (ii) and (iii).

7.2.12 When considering the issue of any potential Order for any Scheme in accordance with the provisions of Clause 7.2.1, the Scottish Ministers, at their discretion, may decide that:

(i) if a potential Order for any Scheme contains any rate (or rates) contained in Schedule 2 Part 2, and

(ii) the potential Order does not give value for money to the Scottish Ministers,

the Scottish Ministers may instruct the Operations, activities, duties and responsibilities associated with such Order to be executed in accordance with the provisions of Clauses 7.2.4 (ii) and 7.2.4 (iii) irrespective of the value of any such Scheme or potential Scheme.

7.2.13 Where Operations are valued in whole or in part using any rate or price referred to in, or established in accordance with, this Contract such rate or price shall be deemed sufficient to carry out the full scope of any obligations of the Operating Company specified in or reasonably to be inferred from this Contract in connection with such Operations.

7.2.14 Subject to the other provisions of this Contract, any Order may be issued via the contract control and management function of the Integrated Roads Information System, in writing, or in exceptional circumstances orally, subject to the requirements of Schedule 4 Part 1.

Any such oral Order shall be followed up by the Operating Company submitting a Bid within two Working Days.

7.2.15 The Scottish Ministers may, subject to agreement with the Operating Company, Order Schemes as a Lump Sum Quotation. The Lump Sum Quotation shall be derived from the applicable Schedule of Rates and Prices items adjusted for Contract Price Fluctuations at the estimated time of Scheme execution.

7.2.16 Core Operations shall not be subject to an Order.

7.3 Commencement and Completion of Schemes and Times of Working

7.3.1 Within any Order the Scottish Ministers may specify for any Scheme:

(i) the date for commencement of all or any part of the Operations,

(ii) the time or date for completion of all or any part of the Operations, or

(iii) the time or date for commencement or completion of all or any part of the Works,

required to be undertaken by the Operating Company or the Works Contractor as relevant under any such Order.

7.3.2 The Operating Company on receipt of any Order shall proceed with the Operations with due expedition and without delay in accordance with the Order and this Contract.

7.3.3 Each part of the Operations for any Scheme shall be completed within the time or date for completion stated in each Order (or such extended time or date as may be allowed under Clause 8.1 in respect of such part of the Operations).

7.3.4 Operations for any Scheme shall be undertaken on whatever days and at whatever time or times of day as shall be permitted under this Contract taking account of any restrictions specified in the Scottish Ministers' Requirements or exceptionally on such other days or other time or times of day as may be specified in any Order for any such Scheme.

7.4 Cancellation of Orders

7.4.1 The Scottish Ministers at their discretion may cancel any Order, or part of an Order by issuing a written notice of cancellation. On receipt of a notice of cancellation, the Operating Company shall take all possible steps to terminate, at the earliest possible date and on the best possible terms, any commitments and liabilities it has entered into, or incurred for the purposes of carrying out its obligations under the relevant Order or cancelled part of the Order.

7.4.2 Following cancellation of an Order, or part of the work within an Order, the Scottish Ministers will pay the Operating Company the following amounts:

(i) any amount due for completed work assessed in accordance with this Contract,

(ii) the cost of equipment and materials purchased and accepted by the Operating Company for the Order and not included in the work and in respect of which equipment and materials the Operating Company demonstrates to the reasonable satisfaction of the Scottish Ministers that title will pass to the Scottish Ministers upon payment. Payment will only be made for equipment and materials that cannot be used for other Operations ordered at the time of, or within one month of, the notice of cancellation,

(iii) other costs reasonably and directly incurred in the expectation of completing the whole of the Order,

(iv) the cost of removing plant, equipment and surplus materials which were properly on Site for the purposes of carrying out the Order, from the relevant Site,

(v) an allowance for profit in respect of such costs,

(vi) any amounts retained by the Scottish Ministers in respect of the cancelled Order, subject to there being no Defects and uncorrected Non-Conformances in respect of work already completed for the Order.

The Operating Company shall include details of any amounts it considers due for payment under this Clause 7.4.2 in the Statements submitted in accordance with Clause 10.3.

Subject to proper substantiation by the Operating Company, the Scottish Ministers shall pay to the Operating Company the amount that, in the opinion of the Scottish Ministers on the basis of such a Statement, shall be due to the Operating Company pursuant to this Clause 7.4.2 following the timings and procedures given in Clause 10.3.

All amounts considered due for payment must be included in Statements within three months of the notice of cancellation. Amounts notified to the Scottish Ministers in later Statements will be not be eligible for payment unless prior agreement by the Scottish Ministers is given within two months of the notice of cancellation.

8. CLAUSE 8: EXTENSION OF TIME PROVISIONS

8.1 Extension of Time for Completion of Operations for any Scheme within an Order

8.1.1 Where, for any Scheme any cause of delay occurs that is:

(i) provided for in this Contract,

(ii) as a result of exceptional adverse weather conditions, or

(iii) as a result of other special circumstances,

that delays Operations forming all or part of the Scheme, the Operating Company shall be entitled to an extension of time for completion of such Operations. No extensions of time shall be granted in respect of an Order issued pursuant to Clause 5.6.5 unless the delay is caused by the actions of the Scottish Ministers.

Where any of such causes of delay occur which in the opinion of the Operating Company, acting reasonably, entitle the Operating Company to an extension of time for the completion of any such Operations, the Operating Company shall within seven days after the cause of the delay notify the Scottish Ministers that a delay has occurred and state the timing and reason for such delay. Within 14 days of the cause of the delay or such longer period as may be consented to by the Scottish Ministers, the Operating Company shall deliver to the Scottish Ministers full and detailed particulars of any claim for extension of time to which it may consider itself entitled in order that such claim may be considered by the Scottish Ministers.

8.1.2 The Scottish Ministers will decide whether the causes of delay entitle the Operating Company to an extension of time by the use of whatever evidence the Scottish Ministers consider appropriate. After receipt of full and detailed supporting evidence of the extension of time claim from the Operating Company the Scottish Ministers will as soon as practicable in their opinion grant in a notice in writing to the Operating Company the extension of time (if any) to which they consider the Operating Company shall be entitled for the completion of the said Operations.

Where the Scottish Ministers do not consider that any extension of time is due to the Operating Company in respect of the said Operations or any such Scheme or part of any such Scheme within the Order concerned, the Scottish Ministers will as soon as practicable in their opinion notify the Operating Company accordingly.

8.1.3 Any extended time for completion granted under Clause 8.1.2:

(i) shall not extend beyond the Termination Date, and

(ii) shall not entitle the Operating Company to any additional payment under this Contract,

and there shall be no affect on the value of the said Scheme within the Order and the Order concerned.

9. CLAUSE 9: MEASUREMENT PROVISIONS

9.1 Measurement

9.1.1 Any error in description in Schedule 2 Part 1 and Schedule 2 Part 2 or omission therefrom shall not vitiate this Contract nor release the Operating Company from the execution of the whole or any part of the Operations according to the relevant Order and the Scottish Ministers' Requirements, or any of its other obligations or liabilities under this Contract.

Subject to the other provisions of this Contract, the Scottish Ministers will correct any such error or omission. If as a result of such a correction the Operating Company

believes that a new rate or price should be used, the Operating Company shall follow the procedures given in Schedule 4 Part 1.

Notwithstanding the foregoing, there shall be no rectification of any errors, omissions, or wrong estimates in the rates or prices inserted by the Operating Company in the Schedule of Rates and Prices in Schedule 2 Part 2.

9.1.2 Except where any statement or general or detailed description of the work for the Operations contained in Schedule 1 or Schedule 2 expressly shows to the contrary, quantities shall be deemed to be measurable and measurements shall be made according to the procedure set forth in Schedule 2 Part 1, notwithstanding any general or local custom.

9.1.3 Value Added Tax and Contract Price Fluctuation shall be excluded when valuing:

(i) Incidents and or repairs to Category 1 Defects in order to determine whether or not the value of repair is more than £10,000, and

(ii) repairs to Damage to Crown Property in order to determine whether or not the value of repair is more than £50,000.

9.2 Measurement of Operations Executed

9.2.1 Subject to the other provisions of this Contract, the Operating Company shall measure and value the Operations executed in accordance with this Contract.

9.2.2 If the Scottish Ministers require any part of the Operations to be measured by themselves or by the Performance Audit Group, they will give not less than five Working Days' notice to the Operating Company who shall attend and assist in making such measurement and shall provide all particulars required by either the Scottish Ministers or the Performance Audit Group.

Where the Operating Company does not for any reason attend, then the measurement made by or on behalf of the Scottish Ministers shall be deemed to be the correct measurement of such Operations.

9.2.3 Orders placed following an acceptance of a Lump Sum Quotation are not remeasurable.

9.2.4 The figure titled "Contractual Provisions For Dealing With Incidents" set out in Schedule 1 Annex 6 shall be used by the Operating Company to establish:

(i) whether any Incident is to be treated as Core Operations or Ordered Operations,

(ii) whether or not any incident is to be treated as Damage to Crown Property,

(iii) the appropriate classification, and

(iv) the measurement applicable to the Operations .

9.2.5 The figure titled "Contractual Provisions for Design Associated with Schemes" set out in Schedule 1 Annex 6 shall be used by the Operating Company to establish whether the Design for a Scheme is to be treated as Core Operations or Ordered Operations.

10. CLAUSE 10: VALUATION AND PAYMENT PROVISIONS

10.1 Valuation of Operations

10.1.1 The value of the Operating Company's Operations shall be determined by the following five principles in descending order of consideration for determination namely:

(i) No value. Where as an example any Order requires the Operating Company to rectify or remedy any Operating Company Default, or consequence of any Operating Company Default, the Order shall be valued as having no value.

(ii) Remeasured and valued in accordance with the applicable rates and prices in Series:

(a) 100 to 700,

(b) 1100 to 1500,

(c) 1700,

(d) 1800,

(e) 2000,

(f) 2300 to 2400,

(g) 3000,

(h) 3300,

(i) 5000,

(j) 6100 to 6500,

(k) 6700 to 6800, and

(l) 7000,

of Schedule 2, adjusted in accordance with the provisions of Clause 10.7.

(iii) where in the opinion of the Scottish Ministers the rates and prices in Series:

(a) 100 to 700,

(b) 1100 to 1500,

(c) 1700,

(d) 1800,

(e) 2000,

(f) 2300 to 2400,

(g) 3000,

(h) 3300,

(i) 5000,

(j) 6100 to 6500,

(k) 6700 to 6800, and

(l) 7000,

of Schedule 2 do not apply, then by remeasurement and valuation using rates or prices deduced from the appropriate rates or prices in Series:

(a) 100 to 700,

(b) 1100 to 1500,

(c) 1700,

(d) 1800,

(e) 2000,

(f) 2300 to 2400,

(g) 3000,

(h) 3300,

(i) 5000,

(j) 6100 to 6400, and

(k) 6700 to 6800,

of Schedule 2, so far as shall be reasonable to do so and adjusted in accordance with the provisions of Clause 10.7. The establishment of such rates and prices shall be based on the following order of precedence:

(a) using the Breakdown of Rates and Prices as set out in Annex 2.2/A of Schedule 2 Part 2,

(b) deduced from the rates and prices included in the Schedule of Rates and Prices but not included in the Breakdown of Rates and Prices as set out in Annex 2.2/A of Schedule 2 Part 2.

(iv) If the Scottish Ministers accept a Lump Sum Quotation submitted by the Operating Company for work, and have issued an Order for that work which states that the work is to be valued at the amount of the corresponding Lump Sum Quotation, the Order is valued accordingly. The value of the Order shall not be changed if the assumptions upon which the Lump Sum Quotation is based are shown by recorded information to have been wrong.

(v) Where in the opinion of the Scottish Ministers none of the principles in Clauses 10.1.1 (i) to (iv) apply, then by measurement and valuation in accordance with fair rates and prices.

10.1.2 Where the Scottish Ministers require the Operating Company to pay for supplementary services or payment of accounts, the Scottish Ministers may issue an Order for such Operations whereby all or any part of such an Order to pay for supplementary services or payment of accounts shall be valued in accordance with the applicable rates and prices in Schedule 2 Series 6500 and Series 7000.

10.1.3 For any Operations executed on the basis of Series 6200 and Series 6500 of Schedule 2, the Operating Company shall for such Operations produce and retain:

(i) daily Records of the hours worked by each employee,

(ii) a verifiable register of the annual salaries of all employees engaged in such Operations,

(iii) daily Records showing the hours worked using Constructional Plant and the quantities of materials used in such Operations,

(iv) invoices for materials used in such Operations, and

(v) for work executed by supplementary service contractors, ensure that such supplementary service contractors produce and retain daily Records of the hours worked by each of its employees and shall provide a copy of such Records at any time to the Operating Company.

All such information, Records, registers and all other like information referred to in this Clause 10.1.3 shall be retained and maintained by the Operating Company in the Central Office until the Service End Date and for the remainder of the Contract Period made available for inspection or audit at any time by the Scottish Ministers or the Performance Audit Group.

10.1.4 Notwithstanding the provisions of Clauses 10.1.1 to 10.1.3, the Scottish Ministers will in exceptional circumstances and at their discretion be entitled to value Operations by any of the principles contained within the provisions of Clauses 10.1.1 to 10.1.3, providing the method of valuation is contained within the relevant Order. The provisions of this clause may not be used to value Operations for which a valuation can be correctly made under Clause 10.1.1 (ii) using existing rates and prices contained in Schedule 2 Part 2 unless the Scottish Ministers consider at their sole discretion that the provisions of Clause 7.2.12 apply.

10.1.5 If requested in writing by the Scottish Ministers, the Operating Company shall provide to the Scottish Ministers such information as may be necessary to satisfy the Scottish Ministers in respect of any amount to be paid or to subsequently verify any payment previously made by the Scottish Ministers under the other provisions of this Contract.

10.1.6 For any part of the Operations executed in accordance with the provisions of Clause 7.2.1 (vi), the Operating Company shall, subject to the other provisions of this Contract, be reimbursed in respect of the price payable by it to the sub-contractor or third party or supplier after the deduction of any discount, rebate or allowance to which the Operating Company shall be entitled (whether at that time or subsequently) with the addition of the applicable Operating Company's percentage adjustment. The Operating Company's percentage adjustment shall be applied after discounts or rebates have been deducted.

Any payment is subject to the Scottish Ministers being satisfied that in their opinion that the price payable to such sub-contractor or third party or supplier is fair and reasonable in all the circumstances.

10.1.7 The value of any Order shall not be determined in accordance with the rates and prices in Series 6500 unless the Scottish Ministers have notified the Operating Company of such method of valuation as part of the Order or have notified the Operating Company of such method of valuation in writing prior to such Operations commencing.

10.1.8 Subject to any other provisions of this Contract, the amount paid to the Operating Company for executing Operations during the Contract Period shall be the value of Operations determined in accordance with the applicable rates and prices in this Clause 10.1.

10.2 Payments to Sub-Contractors

10.2.1 Before making any payment under Clause 10.3, the Scottish Ministers shall be entitled to receive from the Operating Company reasonable proof that all sums (less contractual deductions including but not limited to retentions provided for in the sub-contract) included in previous payments for the Operations provided by any sub-contractors of the Operating Company have been paid to such sub-contractors or discharged by the Operating Company.

In the absence of such proof, unless the Operating Company:

(i) provides written details to the Scottish Ministers of any reasonable cause it may have for withholding, paying less or refusing to make such payment, and

(ii) provides written proof to the Scottish Ministers that it has so notified in writing any such sub-contractor,

the Scottish Ministers will be entitled to pay direct to any sub-contractor all payments (less contractual deductions including but not limited to retentions provided for in the sub-contract) which the Operating Company has failed to make to sub-contractors of the Operating Company.

10.2.2 The Scottish Ministers shall be entitled to deduct by way of retention or set-off the amount so paid by the Scottish Ministers from any sums due or which become due from the Scottish Ministers to the Operating Company.

10.3 Payments under this Contract

10.3.1 Subject to the other provisions of this Contract, unless otherwise agreed in writing by the Scottish Ministers, the Operating Company shall submit the first Statement to the Scottish Ministers between the eighth and twelfth day of the first calendar month following Operations Commencement Date 1 and thereafter within 14 days after the end of each calendar month. Each Statement shall be in accordance with the Scottish Ministers' Requirements, shall set out the sum that the Operating Company considers will become due on the payment due date for that Statement and the basis on which that sum is calculated and show the actual value of the Operations executed up to the end of the calendar month in question and shall contain the following information:

(i) the amounts to which the Operating Company considers itself entitled in connection with all other matters for which provision is made under this Contract separately identified for each Order,

(ii) subject to Clause 10.3.2, the value of materials delivered to the Unit but not incorporated into the work,

(iii) the amounts paid to date for each Order,

(iv) the amount now considered due for payment for each Order,

(v) the amounts paid to date for Core Operations separately identified for each Work Code,

(vi) the amount now considered due for payment for Core Operations separately identified for each Work Code,

(vii) deductions for retention,

(viii) any other deductions made in accordance with this Contract,

(ix) any amount under Clause 7.4.2, and

(x) summary totals for all Orders under the above headings.

10.3.2 For payment of goods or materials included in Clause 10.3.1 (ii) above, the Statement shall include a list of any such goods or materials and their value that have not yet been delivered to the Unit, but of which the property has vested in the Scottish Ministers pursuant to Clauses 11.2.1 to 11.2.6. The property of goods and materials delivered to the Unit must be vested in the Scottish Ministers to qualify for payment.

10.3.3 Within any Statement, the Operating Company shall only include items in respect of which:

(i) all supporting measurement Records are lodged within the contract control and management function of the Integrated Roads Information System,

(ii) all inspection and testing stipulated in the relevant inspection and test plan has been completed,

(iii) all results of such inspection and testing show that the work is fully compliant with the requirements of this Contract,

(iv) all Records of such inspection and testing are lodged within the contract control and management function of the Integrated Roads Information System,

(v) rates and prices are contained in Schedule 2, and

(vi) rates and prices have been fixed or determined by the Director subsequent to Operations Commencement Date 1 and have been added to the contract control and management function of the Integrated Roads Information System.

10.3.4 Subject to the provisions of Clause 10.3.1, payment for the provision of the Management System and Quality Plan as consented to in writing by the Scottish Ministers, and will only be made following the first acceptance of same by the Scottish Ministers.

10.3.5 Within 28 days of the date of delivery of the Operating Company's Statement to the Scottish Ministers in accordance with Clause 10.3.1, the Scottish Ministers shall, subject to Clause 10.3.7, pay to the Operating Company, the amount that, in the opinion of the Scottish Ministers on the basis of such Statement, shall be due to the Operating Company pursuant to Clause 10.3.1 less a retention as provided for in Clause 10.3.10.

10.3.6 The Scottish Ministers shall not be bound to make a payment for a sum less than £50,000 in payment against any Statement during any Annual Period.

10.3.7 The date on which a payment becomes due under this Clause 10.3 shall be 16 days after submission of the Statement in accordance with the provisions of Clauses 10.3.1 to 10.3.3 ("payment due date"), with the final date for payment being 28 days after the date of delivery of the Operating Company's monthly Statement under Clause 10.3.1.

Not later than five days after the payment due date the Scottish Ministers or the Specified Person shall give a notice ("payment notice") to the Operating Company which payment notice shall, in respect of the relevant Statement, specify the sum that the Scottish Ministers or the Specified Person considers to have been due at the payment due date and the basis on which that sum has been calculated ("the notified sum"). It is immaterial that the notified sum may be zero.

Not later than one day before the final date for payment under this Clause 10.3.7 the Scottish Ministers or Specified Person may give a notice to the Operating Company of the Scottish Ministers' intention to pay less than the notified sum ("pay less notice"). The pay less notice shall set out the sum due on the date the notice is served and the basis on which that sum is calculated. It is immaterial that the sum set out as due in the pay less notice may be zero.

The payment notice and the pay less notice are separate notices and shall not be combined.

Subject to any pay less notice given under this Clause 10.3.7, the Scottish Ministers shall, no later than the final date for payment, pay the Operating Company the notified sum.

10.3.8 Any additional payments sought under Clause 10.8 shall be listed separately against each Order and submitted at the same time as the Statement. Any such listing on a Statement is <u>not</u> a notification meeting the requirement of Clause 10.8.2.

10.3.9 Within 64 weeks of the Service End Date, the Operating Company shall issue to the Scottish Ministers a Statement which in their opinion is the final value of the Operations executed under this Contract. The Statement shall set out the sum that the Operating Company considers will become due on the payment due date for that Statement and the basis on which that sum is calculated and show:

(i) all amounts previously paid by the Scottish Ministers under this Contract,

(ii) the amount of retention (if any) held by the Scottish Ministers,

(iii) the value (if any) of any Non-Conformance Operations executed by the Scottish Ministers pursuant to Clauses 5.8.1 to 5.8.3,

(iv) all sums due to the Scottish Ministers from the Operating Company to which the Scottish Ministers are entitled under this Contract, and

(v) the balance (if any) due by the Scottish Ministers to the Operating Company or by the Operating Company to the Scottish Ministers as the case may be. Such balance shall, subject to the other provisions of this Contract, be paid to or by the Operating Company as the case may require.

The date on which payment becomes due shall be the date of notification in writing to the Scottish Ministers of the Statement by the Operating Company under this Clause 10.3.9 ("payment due date").

Not later than five days after the payment due date under this Clause 10.3.9 the party by whom the balance is payable ("paying party") shall give a notice ("payment notice") to the other party which payment notice shall, in respect of the Statement, specify the sum that the paying party considers to have been due at the payment due date and the basis on which that sum has been calculated ("the notified sum"). It is immaterial that the notified sum may be zero.

The final date for payment either to or by the Operating Company shall be the date falling 28 days following the date of such notification.

Not later than one day before the final date for payment under this Clause 10.3.9, the paying party may give a notice to the other party of its intention to pay less than the notified sum ("pay less notice"). The pay less notice shall set out the sum due on the date the notice is served and the basis on which that sum is calculated. It is immaterial that the sum set out as due in the pay less notice may be zero.

The payment notice and the pay less notice are separate notices and shall not be combined.

Subject to any pay less notice given under this Clause 10.3.9, the paying party shall, no later than the final date for payment, pay the other party the notified sum.

10.3.10 Subject to the other provisions of this Contract, no retention shall be made pursuant to Clause 10.3.1 in respect of Operations except as set out below.

Where the Operating Company fails to deliver the Bond and Undertaking validly executed in a self-proving manner to the Scottish Ministers by the due date referred to in Clause 4.6.1, or where the Bond and Undertaking is not acceptable to the Scottish Ministers, the Scottish Ministers will immediately accumulate a retention fund in their favour in lieu of the provisions of the Bond and Undertaking from any amount due to the Operating Company on and after the said date. The total of the retention fund accumulated shall not exceed £2,000,000.

Any such fund retained pursuant to this Clause 10.3.10 shall not be released until either:

(i) the Operating Company provides the Bond and Undertaking pursuant to Clause 4.6.1, or

(ii) if no Bond and Undertaking is provided, the later of the end of the Contract Period and the settlement of the final account pursuant to Clause 10.3.9 except in respect of any demand in writing made before such date.

Subject to the provisions of this Clause 10.3.10 and Clause 10.3.11, the said retention fund referred to in this Clause 10.3.10 shall be retained from the Operating Company for the same period of time as that which would have been required from the guarantor under the Bond and Undertaking or until such time as the Operating Company provides a Bond and Undertaking in the terms set out in Clause 4.6.1 and that such Bond and Undertaking is acceptable to the Scottish Ministers.

Notwithstanding the other provisions of this Contract, the Operating Company shall not receive any further payments from the Scottish Ministers until such time as the aggregate payments due to the Operating Company under the other provisions of this Contract exceed the amount of the said retention fund retained by the Operating Company under this Clause 10.3.10.

Such retention fund held by the Scottish Ministers shall be used by the Scottish Ministers as if it was the sum of money referred to within the Bond and Undertaking and shall be drawn from by the Scottish Ministers in the event of every circumstance described within the terms of the Bond and Undertaking contained in Schedule 1, Annex 2 that would have required the guarantor of the Bond and Undertaking to pay money to the Scottish Ministers.

The Scottish Ministers shall pay, subject to the other provisions of this Contract, any remaining balance of the retention fund to the Operating Company:

(i) within 14 days of the Scottish Ministers having received a proper and acceptable Bond and Undertaking pursuant to Clause 4.6.1, or

(ii) in accordance with Clause 10.3.9,

whichever is the earlier.

10.3.11 If the Scottish Ministers fail to make payment to the Operating Company in accordance with Clause 10.3.5 or payment (if any) in accordance with Clause 10.3.9 or if the Operating Company fails to make a payment (if any) to the Scottish Ministers in accordance with Clause 10.3.9, the party in Default shall pay to the other interest upon any payment overdue at a rate per annum equivalent to three per cent above the Base Lending Rate. Interest shall be calculated daily and compounded annually on 31 March.

In the event of any variation in the said Base Lending Rate being announced whilst such payment remains overdue, the interest payable by the party in Default of payment to the other shall be correspondingly varied from the date of each change in Base Lending Rate.

Notwithstanding any other provision of this Contract, a payment due to be made by the one party to the other shall only be overdue for the purposes of this Clause 10.3.11 where such payment has not been made prior to the final date for such payment.

If the Operating Company fails to provide the Bond and Undertaking to the Scottish Ministers in terms of Clause 4.6.1 or where the Bond and Undertaking is not acceptable to the Scottish Ministers by the due date under that clause then any payment due to the Operating Company by the Scottish Ministers pursuant to the provisions of Clause 10.3, but is retained in a retention fund in lieu of an acceptable Bond and Undertaking under Clause 10.3.10, shall not be construed as being a late payment for the purposes of Clause 10.3.11.

10.3.12 Without prejudice to the other provisions of this Contract, the Scottish Ministers may, by means of a pay less notice issued pursuant to Clause 10.3.7 or Clause 10.3.9 (as appropriate), deduct from any payment due to the Operating Company the value of any part of the Operations with which they are dissatisfied and for that purpose (or for any other reason which in their opinion may seem proper) may deduct, correct or modify any sum previously paid by them to the Operating Company.

10.3.13 Payment by the Scottish Ministers of any sum due to the Operating Company shall be without prejudice to any rights that the Scottish Ministers may have against the Operating Company.

Such payment shall not constitute or be deemed to constitute any admission by the Scottish Ministers as to the performance by the Operating Company of any of its obligations under this Contract.

10.3.14 The Operating Company shall, from Operations Commencement Date 1 until the Service End Date, keep and maintain until the later of five years after the Service End Date or five years after the final date of the final payment of any sums due to the Operating Company under this Contract have been made by the Scottish Ministers:

(i) financial accounts and Records of all expenditures incurred and payments received in executing the Operations,

(ii) the contract control and management function of the Integrated Roads Information System, and

(iii) all data entered on, or generated by, the contract control and management function of the Integrated Roads Information System.

all to the satisfaction of the Scottish Ministers.

10.3.15 On request, the Operating Company shall allow and permit the Scottish Ministers, any auditors of the Scottish Ministers or any other organisation or body which may from time to time have right and cause to audit the Scottish Ministers accounts, and the Performance Audit Group, at any time during the period referred to in Clause 10.3.14 to:

(i) inspect all such books of account and Records as referred to in Clause 10.3.14, and

(ii) have access to the contract control and management function of the Integrated Roads Information System.

The Operating Company shall provide such further explanation in writing as may be required in relation to any matter arising out of or in connection with any such:

(i) inspection of such account and Records, and

(ii) access to the contract control and management function of the Integrated Roads Information System,

as the Scottish Ministers, any auditor or the Performance Audit Group may require.

10.3.16 Nothing contained in this Clause 10.3 shall relieve the Operating Company of any of its obligations under this Contract.

10.3.17 If the Scottish Ministers fail to pay the Operating Company in full by the final date for payment as required by this Contract and the failure continues for 14 days after the Operating Company has given notice to the Scottish Ministers of its intention to suspend the performance of any or all its obligations under this Contract and the ground or grounds on which it is intended to suspend performance, the Operating Company may suspend such performance until payment is made in full. Where the right conferred by this Clause 10.3.17 is exercised, the Scottish Ministers shall be liable to pay the Operating Company a reasonable amount in respect of costs and expenses reasonably incurred by the Operating Company as a result of the exercise of the right.

10.4 Prompt Payment

10.4.1 Any sub-contract for Operations on a Site entered into by the Operating Company shall provide for timely payment of the sub-contractor on terms consistent with Legislation or 30 days whichever is the earlier.

10.4.2 For any other sub-contract for any part of the Operations, the Operating Company shall pay its sub-contractors within 30 days of the receipt by the Operating Company of a valid demand for payment.

10.5 Overpayment

10.5.1 Where payment has been made for any Statement and it is found that the payment includes any amount that is in excess of that to which the Operating Company is entitled, the Operating Company shall deduct from the next Statement that it submits to the Scottish Ministers:

(i) the difference between that amount and the due amount, and

(ii) interest upon that difference, at the rate stated in Clause 10.3, calculated from the date of that payment until the date of repayment.

10.6 Money Recoverable under other Contracts

10.6.1 Wherever under this Contract any sum of money shall be recoverable from or payable by the Operating Company, without prejudice to the other provisions of this Contract and in addition to any other right or remedy that the Scottish Ministers may have, such sum may be deducted from or reduce the value of the amount of any sum or sums then due or which at any time thereafter may become due to the Operating Company under this Contract, or under any other contract with:

(i) the Scottish Ministers,

(ii) any department, office, agency, authority or other such like organisations of the Crown.

10.7 Contract Price Fluctuations

10.7.1 The amount payable by the Scottish Ministers to the Operating Company in any payment under this Contract (other than amounts due under this Clause) shall only be increased or decreased in accordance with the provisions of this Clause 10.7 if there shall be any changes in the *Highways Term Maintenance Association Price Adjustment Formulae Indices - 2010 Series* published by the Building Cost Information Services (BCIS). Any adjustments arising from application of these indices are the Contract Price Fluctuation amounts. Schedule 1, Annex 4 details the Contract Price Fluctuation indices assigned for each Work Category.

The net total of such increases and decreases shall be taken account of in determining any sums payable to the Operating Company.

10.7.2 For the purpose of this Contract:

(i) "Final Index Figure" means any Work Category index figure appropriate to Clause 10.7.1 that is described in the said Building Cost Information Services publication as "Firm" unless any index figure described in the said publication as "Firm" is subsequently amended and described as "Revised", in which case the revised figure will be the Final Index Figure,

(ii) "Base Index Figure" means the appropriate Final Index Figure applicable to the date 42 days prior to the date for the return of the Final Tender Submission,

(iii) "Current Index Figure" means the appropriate Final Index Figure to be applied to any payment made or due to be made by the Scottish Ministers pursuant to Clause 10.3 and shall be the appropriate Final Index Figure applicable to the date 42 days prior to the last day of the period to which the payment relates. For any payments made after the Termination Date, the

Current Index Figure shall be the appropriate Final Index Figure applicable to the date 42 days prior to the Termination Date, and

(iv) The "Effective Value" in respect of the whole or any part (for each Work Category) means the difference between:

(a) the amounts in the appropriate categories given in Schedule 1, Annex 4 to which Contract Price Fluctuation applies and that, in the opinion of the Scottish Ministers, is due to the Operating Company either under Clause 10.3.1 (i), or in the case of the final payment, the amount (if any) due to the Operating Company under Clause 10.3.9 (but in each case before deducting sums previously paid on account), and

(b) the amount calculated in accordance with Clause 10.7.2 (iv) (a) and included in the last preceding interim payment made by the Scottish Ministers in accordance with Clauses 10.3.1 to 10.3.10,

provided that in the case of the first payment, the Effective Value shall be the amount calculated in accordance with Clause 10.7.2 (iv) (a).

10.7.3 Any increase or decrease in the amounts otherwise payable under Clause 10.3 for items in each Work Category pursuant to Clause 10.7.2 shall be calculated as the net sum of the products obtained by multiplying each of the Effective Value proportions for each Work Category given in Schedule 1, Annex 4 by a fraction, the numerator of which is the relevant Current Index Figure minus the relevant Base Index Figure and the denominator of which shall be the relevant Base Index Figure. This net sum shall be reduced by 10 percent for the Non-Adjustable Element.

Where in Schedule 1, Annex 4 there is no Work Category assigned to a particular item in Schedule 2 Part 2, such item shall not be subject to adjustment in accordance with the provisions of Clause 10.7.

10.7.4 Final Index Figures in the publication referred to in Clause 10.7.1 shall be used for the adjustment of interim valuations.

10.7.5 Contract Price Fluctuation adjustment under Clause 10.7.1 shall not apply to any settled amounts arising from the settlement of Disputes under Clause 18 except where such adjustment forms the basis of such Dispute.

10.7.6 Contract Price Fluctuation adjustment under Clause 10.7.1 shall not apply to any adjustments to the Contract Price made under Clause 21.1.

10.7.7 This Clause 10.7 shall not apply when valuing Orders based on Lump Sum Quotations.

10.8 Additional Payments and Claims

10.8.1 Where the Operating Company considers that the items within the Schedule of Rates and Prices are not applicable to the Operations undertaken or to be undertaken and considers that additional payment should be made, it shall:

(i) comply with the requirements in Schedule 4 Part 1, and

(ii) keep such Contemporary Records as may be necessary to substantiate any claim.

For the purposes of Clause 10.8, a new rate or price is one which is:

(i) neither described in Schedule 2 Part 2, and

(ii) nor fixed nor determined by the Scottish Ministers subsequent to Operations Commencement Date 1.

10.8.2 Where the Operating Company considers that any other additional payment should be made, or if the Operating Company is not satisfied with the rates fixed by the Scottish Ministers in accordance with Schedule 4 Part 1, the Operating Company shall:

(i) submit a Claim Notification to the Scottish Ministers, and

(ii) keep such Contemporary Records as may be necessary to substantiate any claim.

The Claim Notification shall be submitted in the format shown in Annex 7 of this Part and shall be given as soon as is practicable and not later than 28 days after the Operating Company became aware, or should have become aware, of the event or circumstance.

If the Operating Company fails to submit a Claim Notification within such period of 28 days, the Operating Company shall not be entitled to additional payment and the Scottish Ministers will be discharged from all liability in connection with the claim.

10.8.3 A Claim Notification form shall be sent separately from any other communication.

10.8.4 Within 91 days of the Claim Notification, or such other period agreed in writing by the Scottish Ministers, the Operating Company shall submit to the Scottish Ministers a full and detailed claim which includes all supporting information and a justification of its entitlement to the additional payment and the amount considered due. Compliance in full by the Operating Company with the terms of this Clause 10.8.4 shall be a condition precedent to the payment of any claim for additional payment.

10.8.5 On receipt of the detailed claim, supporting information and justification of the additional payment considered due, together with any other information subsequently requested and received within the timescales given by the Scottish Ministers, the Scottish Ministers will review and discuss the submissions with the Operating Company.

Within the later of 182 days of the Claim Notification or 42 days of the latest date for receipt of information specified by the Scottish Ministers, the Scottish Ministers will state what (if any) additional payment they consider is due or to be paid in accordance with the Contract on completion of the relevant Operations and notify the Operating Company accordingly. Any such additional payment shall become due 16 days after the date of the Scottish Ministers notification pursuant to this Clause 10.8.5 with the final date for payment being 28 days after the date of the Scottish Ministers notification pursuant to this Clause 10.8.5.

10.8.6 The additional payment (if any) notified will be in the form of determined rates and prices and corresponding quantities. Alternatively payments may be stated as lump sums.

The notification shall also include the item descriptions for the new rates, prices and lump sums. Unless the item description specifically states otherwise, the new rates and prices will be applicable for Operations at any location.

The notification shall be accompanied by full supporting particulars demonstrating the reasoning behind the Scottish Ministers' determination of the contract provisions.

10.8.7 Each Party shall give effect to the notification unless and until it is revised under Clause 18.

10.8.8 The Scottish Ministers may upon receipt of a Claim Notification instruct the Operating Company to keep such Contemporary Records or further Contemporary Records as the case may be as are reasonable and may be material to the claim in the opinion of the Scottish Ministers. The Operating Company shall keep such Records and shall permit the Scottish Ministers to inspect all Records kept pursuant to this Clause and shall supply the Scottish Ministers with copies thereof as and when they shall so instruct.

10.8.9 Any instruction given under this Clause 10.8 is not an admission of liability by the Scottish Ministers.

10.8.10 The requirements of this Clause 10.8 are in addition to those of any other Clauses which may apply to a claim. If the Operating Company fails to comply with this Clause 10.8 or any other Clause relating to any claim then any additional payment shall take account of the extent (if any) to which failure has prevented or prejudiced proper investigation of the claim, unless the claim is excluded under the last paragraph of Clause 10.8.2.

10.8.11 If the Scottish Ministers do not make the notification required by Clause 10.8.5, within the timescales stated, the Operating Company may notify a Dispute using the procedures given in Clause 18.

10.9 Valuation of Claims

10.9.1 Any additional payment due shall be determined by the Scottish Ministers in accordance with the following principles, in the following order of application, to individual elements of work contained within the claim:

(i) where work is of the same character and carried out under similar conditions to items within the contract control and management function of the Integrated Roads Information System, by using rates and prices contained in Schedule 2 Part 2 or rates and prices fixed or determined subsequent to Operations Commencement Date 1,

(ii) where work is not of a similar character or not carried out under similar conditions the rates and prices contained in Schedule 2 Part 2 or rates and prices fixed or determined subsequent to Operations Commencement Date 1 shall be used as a basis for valuation of the amount due as far as is reasonable, and

(iii) where there are no items contained in Schedule 2 Part 2 or rates and prices fixed or determined subsequent to Operations Commencement Date 1 to form the basis for valuation, by a fair valuation.

Series 6500 in Schedule 2 Part 2 may only be used in the valuation of the amount due if an Order so states or the Scottish Ministers notifies the Operating Company in writing before Operations commence.

10.10 On-Account Payments

10.10.1 The Operating Company will not be entitled to any on-account payment of any disputed amounts prior to the fixing or determination of rates and prices by the Scottish Ministers. The Scottish Ministers may make an on-account payment at their sole discretion.

10.10.2 The Operating Company will not be entitled to interest on any claimed amounts between the date of completion of the relevant Operations and the date of determination by the Scottish Ministers.

10.11 Scheme Completion Date and Scheme Closure Date

10.11.1 Not later than 56 days after the Scheme Completion Date the Operating Company shall enter the Scheme Closure Date within the contract control and management function of the Integrated Roads Information System.

By entering a Scheme Closure Date in the contract control and management function of the Integrated Roads Information System, the Operating Company certifies that:

(i) the payment claimed for any such Scheme is the final and conclusive payment claimed,

(ii) subject to the provisions of Clause 10.3.12, no further payment of whatsoever nature will be claimed in respect of or in connection with the Scheme, and

(iii) any such final and conclusive payment claimed for such Scheme:

(a) is based on accurate final quantities (where applicable),

(b) has full supporting documentation, and

(c) has been properly claimed in accordance with this Contract.

10.11.2 If at any time subsequent to the Scheme Closure Date the Scottish Ministers reasonably believe that the basis of the final and conclusive payment claimed or paid may be incorrect, they may, after notifying the Operating Company, open up and review the final Scheme value due or paid by the Scottish Ministers.

10.11.3 For Core Operations, the Operating Company shall enter a Core Operations Closure Date for each of the Core Operations within 14 days of the end of the Financial Year.

By entering a Core Operations Closure Date in the contract control and management function of the Integrated Roads Information System, the Operating Company certifies that:

(i) the payment claimed for the Core Operations for the preceding Financial Year is the final and conclusive payment claimed,

(ii) subject to the provisions of Clause 10.3.12, no further payment of whatsoever nature will be claimed in respect of or in connection with the Core Operation, and

(iii) any such final and conclusive payment claimed for such Core Operation:

(a) has full supporting documentation, and

(b) has been properly claimed in accordance with this Contract.

10.11.4 If at any time subsequent to the Core Operations Closure Date the Scottish Ministers reasonably believe that the basis of the final and conclusive payment claimed or paid may be incorrect, the Scottish Ministers may, after notifying the Operating Company, open up and review the final annual Core Operation value due or paid by the Scottish Ministers.

10.11.5 The Scottish Ministers will be entitled at any time to recover from the Operating Company any value that has been incorrectly claimed by the Operating Company and, subject to the other provisions of this Contract, the Scottish Ministers may at their option, either deduct the same from the next payment or any subsequent payment due to the Operating Company or recover the same on demand from the Operating Company as a debt due to the Scottish Ministers.

10.11.6 Interest shall be paid by the Operating Company in accordance with Clause 10.3.11 on any incorrectly claimed amounts.

10.11.7 If the Operating Company does not enter either a Scheme Closure Date or a Core Operations Closure Date into the contract control and management function of the Integrated Roads Information System within the prescribed period, the closure dates shall be 56 days or 14 days respectively after the Scheme Completion Date or end of the Financial Year in which the Core Operations in question were undertaken. In these circumstances:

(i) the final payment claimed shall be that recorded in the contract control and management function of the Integrated Roads Information System on the Closure Date and shall not be changed by the Operating Company after that date, and

(ii) the Scottish Ministers are not obliged to consider any supporting documentation submitted by the Operating Company after the Closure Date in their assessment of the final Scheme value.

11. CLAUSE 11: PROPERTY IN MATERIALS AND PLANT AND VESTING OF GOODS AND MATERIALS AND CARE OF PROPERTY BELONGING TO THE SCOTTISH MINISTERS

11.1 Property in Materials and Plant

11.1.1 For the purpose of Clauses 11.1.1 to 11.1.9 inclusive and Clause 16.1.9:

(i) the expression "Plant" shall mean any Constructional Plant, plant, equipment, temporary work materials, equipment, appliances and things required for carrying out Operations but excluding any vehicles engaged solely in transporting any labour, Constructional Plant, plant, equipment or materials to or from the Unit. "Plant" does not include things intended to form, or forming, part of the Unit, and

(ii) the expression "agreement for hire" excludes any agreement for hire purchase.

11.1.2 All Plant, goods and materials owned or leased by the Operating Company or by any company in which the Operating Company has a controlling interest shall, when on the Unit or being used for the execution of the Operations, be deemed to be the

property of the Scottish Ministers. Plant used as Winter Service Plant shall be deemed to be in use for Operations at all times during the Winter Service Period.

11.1.3 The Operating Company shall not bring on to the Unit and or use in the Operations any hired or leased Plant unless the agreement for the hire or lease of such Plant contains a provision that the owner of such Plant shall:

(i) on request in writing made by the Scottish Ministers within seven days after the date on which any forfeiture has become effective, and

(ii) on the Scottish Ministers undertaking to pay all hire or lease charges in respect of such Plant from such date,

immediately hire or lease such Plant to the Scottish Ministers on the same terms as such Plant was hired or leased to the Operating Company, except that the Scottish Ministers shall be entitled to permit the use of such Plant by any other contractor employed by them for the purpose of completing the Operations under the other terms of this Contract.

11.1.4 Where the Scottish Ministers enter into any agreement for the hire or lease of Plant pursuant to Clause 11.1.3, all sums properly paid by the Scottish Ministers under the provisions of any such agreement and all expenses incurred by them (including stamp duties) in entering into such agreement, are deemed for the purpose of the other provisions of this Contract to be part of the cost of completing the Operations.

11.1.5 Upon any written request made at any time by the Scottish Ministers in relation to any item of Plant, the Operating Company shall forthwith in writing notify to them the name and address of the owner thereof, provide a copy of the terms under which such Plant was hired or leased to the Operating Company and, in the case of hired or leased Plant, certify in writing that the agreement for the hire or lease thereof contains a provision in accordance with the requirements of Clause 11.1.3.

11.1.6 If the Operating Company shall fail to remove any Plant, Constructional Plant, materials, rubbish, temporary work of every kind and traffic management equipment, goods or materials as required pursuant to Clause 4.12.1 within such reasonable time after execution of the Operations as may be allowed by the Scottish Ministers, then the Scottish Ministers may at their option:

(i) sell or otherwise dispose of any such items which are the property of the Operating Company, and

(ii) return any such items that are not the property of the Operating Company to the owner thereof at the Operating Company's expense,

provided always that the Scottish Ministers will, after deducting from any proceeds of any sale the costs, charges and expenses in connection with such sale or return as aforesaid, pay the balance (if any) to the Operating Company.

To the extent that the proceeds of any such sale are insufficient to meet all such costs, charges and expenses of the Scottish Ministers, the excess shall be a debt due from the Operating Company to the Scottish Ministers. Such excess shall be deducted from the next payment or any subsequent payment due to the Operating Company pursuant to the provisions of this Contract or, at the option of the Scottish Ministers, shall be recoverable on demand from the Operating Company as a debt due to the Scottish Ministers.

11.1.7 Subject to the provisions of Clauses 4.10.3, 12.1.3 and Clause 17.3.1, the Scottish Ministers shall not at any time be liable for the loss of, or damage to, any of the:

(i) Plant,

(ii) goods,

(iii) materials, and

(iv) equipment

that have been deemed to become or remain, the property of the Scottish Ministers.

11.1.8 The Operating Company shall, where entering into any sub-contract for the execution of any part of the Operations, incorporate in such sub-contract the provisions of Clauses 11.1.1 to 11.1.10 inclusive in relation to Plant or goods or materials, plant or equipment brought on to the Unit, and or used in the Operations, by the sub-contractor.

11.1.9 Clauses 11.1.1 to 11.1.8 inclusive:

(i) shall not be deemed to imply any consent or approval or acceptance by the Scottish Ministers of the goods or materials or plant or equipment or other matters referred to therein, and

(ii) shall not prevent the rejection of any such goods or materials or plant or equipment or other matters at any time by the Scottish Ministers.

11.1.10 On termination of this Contract, howsoever arising, the Scottish Ministers shall be entitled to use all Plant and or equipment owned, and or used in the Operations, by the Operating Company or by any company in which the Operating Company has a controlling interest or by any sub-contractor of the Operating Company by the Operating Company subject to the Scottish Ministers agreeing to pay reasonable costs for such usage.

11.2 Vesting of Goods and Materials not on the Unit

11.2.1 Where an Order identifies goods or materials for which payment may be made before the same are delivered to the Unit, the Operating Company may with a view to securing payment pursuant to Clause 10.3 for any such goods and materials, transfer the title in the same to the Scottish Ministers before delivery to the Unit provided that such goods and materials have been:

(i) manufactured,

(ii) passed any specified factory testing,

(iii) prepared, or

(iv) made substantially ready for incorporation in the Operations,

and that the said goods and materials:

(v) shall be the property of the Operating Company, or

(vi) the contract for the supply of the same expressly provides that the property therein shall pass unconditionally to the Operating Company.

11.2.2 The intention of the Operating Company to transfer the property in any goods or materials to the Scottish Ministers pursuant to Clause 11.2 shall be evidenced by the

Operating Company taking or causing the supplier of the said goods or materials to take the following actions, namely:

(i) provide to the Scottish Ministers documentary evidence that the property in the said goods or materials has been vested in the Operating Company,

(ii) suitably mark or otherwise plainly identify the said goods and materials in order to show that:

(a) their destination is the Unit,

(b) that they are the property of the Scottish Ministers, and

(c) (where they are not stored at the premises of the Operating Company) to whose order they are held,

(iii) set aside and store the said goods and materials so marked or identified to the satisfaction of the Scottish Ministers, and

(iv) deliver to the Scottish Ministers a schedule listing and giving the value of every item of the goods and materials so set aside and stored and inviting them to inspect the same.

11.2.3 When the Scottish Ministers shall consent in writing, ownership of the said goods and materials for the purposes of this Clause 11.2 shall vest in and become the absolute property of the Scottish Ministers.

Thereafter such goods and materials shall be in the possession of the Operating Company for the sole purpose of delivering them to the Scottish Ministers and incorporating them in the Operations, provided always that:

(i) consent by the Scottish Ministers for the purposes of Clause 11.2 or any payment made by them for goods and materials pursuant to Clause 10.3:

(a) shall be without prejudice to the exercise of any power of the Scottish Ministers contained in this Contract to reject any goods or materials which are not in accordance with the provisions of this Contract, and

(b) upon any such rejection, the property in the rejected goods or materials shall immediately revest in the Operating Company,

(ii) notwithstanding any other provisions of this Contract, the Operating Company shall be responsible for:

(a) any loss or damage to such goods and materials,

(b) for the cost of storing, handling and transporting the same, and

(c) effecting such additional insurance as may be necessary to cover the risk of such loss or damage from any cause.

11.2.4 Neither the Operating Company nor a sub-contractor nor any other person shall have a lien on any goods or materials which have vested in the Scottish Ministers under Clause 11.2.3 for any sum due to the Operating Company, sub-contractor or other person.

The Operating Company shall take all such steps as may reasonably be necessary to ensure that the title of the Scottish Ministers and the exclusion of any such lien shall be brought to the notice of sub-contractors and other persons dealing with any such goods or materials.

11.2.5 Upon cessation of the employment of the Operating Company under this Contract before the completion of the Operations for any reason, the Operating Company shall deliver to the Scottish Ministers any goods or materials the property in which has vested in the Scottish Ministers by virtue of Clause 11.2.3.

Where the Operating Company shall fail to do so, the Scottish Ministers may:

(i) enter any premises of the Operating Company or of any sub-contractor,

(ii) remove such goods and materials, and

(iii) recover the cost of so doing from the Operating Company.

11.2.6 The Operating Company shall incorporate provisions equivalent to those provided in Clause 11.2 in every sub-contract in which provisions are made for payment in respect of goods or materials before the same have been delivered to the Unit.

11.3 Care of Property Belonging to the Scottish Ministers

11.3.1 Where the Operating Company has taken possession of any goods, plant materials or equipment that are, or are deemed to be, the property of the Scottish Ministers including as a minimum any goods, plant, materials or equipment referred to in Schedule 5 Part 7, Schedule 7 Part 6 and or Schedule 7 Part 7, and or goods, plant or materials that have been temporarily taken down or removed then notwithstanding any other provision of this Contract, the Operating Company shall be responsible for:

(i) any loss or damage to, or caused by, such goods, plant materials or equipment,

(ii) any defect and or want of repair in such goods, plant, materials, or equipment,

(iii) ensuring such goods, plant, materials or equipment are in good condition and repair, and

(iv) effecting such additional insurance as may be necessary to cover the risk of any such loss or damage from any cause.

11.3.2 All such goods, plant, materials or equipment shall remain the property of the Scottish Ministers and shall be handed back to the Scottish Minsters (i) at Service End Date or such other date as may be advised by the Scottish Ministers and (ii) in accordance with such requirements as are advised by the Scottish Ministers; such requirements including, as a minimum, that the quantities of such goods, plant`, material or equipment to be handed back will be as handed over by the Scottish Ministers, and that all relevant Intellectual Property Rights, software and or licences will be transferred as required by the Scottish Ministers.

11.4 The Premises

11.4.1 The Scottish Ministers shall make the Premises available to the Operating Company until the Termination Date for uses solely relating to this Contract. The Operating Company's Central Office shall be located at the Premises. Availability and use of the Premises shall be as described in, and in accordance with, the terms of Schedule 5 Part 7 and the separate lease agreement(s) entered into between the Scottish Ministers and the Operating Company contemporaneously with signing of the Agreement.

SCHEDULE 1

PART 4 – INDEMNITIES AND INSURANCE

12. CLAUSE 12: CARE OF THE UNIT, OPERATIONS, INDEMNITY AND INSURANCE

12.1 Care of the Unit and the Operations

12.1.1 For the purposes of this Clause 12 and Annex 5 of this Schedule "Operating Company" shall mean "the person or persons, firm or firms or company or companies with whom the Scottish Ministers have completed and signed the Agreement and such definition shall include the Operating Company's personal representatives, successors and permitted assignees. All references to the Operating Company are deemed to include reference to its employees, agents, representatives unless the context otherwise requires".

12.1.2 The excepted risks, for which the Operating Company shall not be liable under this Clause 12.1, are any loss or damage to the extent that the same is due to:

(i) riot, war, invasion, act of foreign enemies, or hostilities (whether war be declared or not),

(ii) civil war, rebellion, revolution, insurrection, or military or usurped power,

(iii) ionising radiations or contamination by radioactivity from any nuclear fuel or from any nuclear waste, from the combustion of nuclear fuel, radioactive, toxic, explosive or other hazardous properties of any explosive nuclear assembly or nuclear component thereof,

(iv) pressure waves caused by aircraft or other aerial devices travelling at sonic or supersonic speeds,

(v) the use or occupation of any part of the Unit by the Scottish Ministers, and or their agents or servants, and or any contractor other than the Operating Company (not being employed by the Operating Company and or for whom the Operating Company is not responsible), and or third parties including the public (but in each case excluding Damage to Crown Property the repair of which is valued at not more than £50,000, Category 1 Defects the repair of which is valued at not more than £10,000 and Incident Response Operations valued at not more than £10,000), and subject to the other provisions of this Contract, and

(vi) any Defect in the Design, construction or maintenance of the Unit but excluding loss or damage resulting from a Non-Conformance by the Operating Company.

12.1.3 In the event of any loss or, damage from any cause whatsoever (except loss or damage due to any of the excepted risks set out in Clause 12.1.2) to Operational Items while the Operating Company is responsible for the care of any Operational Items or during the execution of the Operations and during the Non-Conformance Liability Period, the Operating Company shall at its own cost replace, repair, rectify, or indemnify and keep indemnified the Scottish Ministers against such loss or damage so that, at completion of relevant Orders and in any case at the Service End Date, the Unit is in good order and condition and complies with the other provisions

of this Contract, and so that the Scottish Ministers have no liability in relation to the loss or damage referred to in this Clause 12.1.3.

12.1.4 In the event of loss or damage arising from any of the excepted risks set out in Clause 12.1.2, the Operating Company shall, subject to an Order, repair and make good the same as aforesaid in accordance with the provisions of this Contract.

12.1.5 Notwithstanding any other provisions of this Contract, the Operating Company shall indemnify the Scottish Ministers against any costs, losses and damages arising as a consequence of any Default by the Operating Company that results in the occurrence of an Incident.

12.1.6 The Operating Company shall be liable for any loss or damage occasioned by it arising out of or as a consequence of the Operations and or to the Unit.

12.2 Damage to Persons and Property

12.2.1 Notwithstanding any other term of this Contract and without prejudice and in addition to any other right or remedy that the Scottish Ministers may have, the Operating Company shall, except if and insofar as this Contract expressly provides otherwise, and subject to the exceptions set out in Clause 12.2.2, indemnify and keep indemnified the Scottish Ministers against all losses, actions, proceedings, claims, costs, damages, demands and expenses (including but not limited to all legal costs and disbursements), incurred by or made against the Scottish Ministers in respect of any injury to or death of any person, or loss of use of or damage to any property (other than the Operations), including surface or other damage to land adjacent to the Unit suffered by any persons who own or occupy such land, that may arise out of, in connection with or in consequence (whether directly or indirectly) of the execution of the Operations.

12.2.2 The exceptions referred to in Clause 12.2.1 that are the responsibility of the Scottish Ministers are:

(i) death of, or injury to, persons and loss of, or damage to, property that results from any negligent act of, or omission or breach of any statutory duty by, the Scottish Ministers or any contractor, subcontractor, or supplier of any tier, (but not the Operating Company and not a contractor, subcontractor, or supplier of any tier being employed by the Operating Company),

(ii) any claims, demands, proceedings, damages, costs, charges and expenses in respect of or in relation to (i) above,

(iii) damage to crops adjacent to the Unit (but only insofar as possession or access has not been given to the Operating Company),

(iv) the use or occupation of land provided by the Scottish Ministers for the purposes of the execution of the Operations (including consequent losses of crops) or interference, whether temporary or permanent, with any right of way, light, air or water or any other form of servitude or wayleave that are the unavoidable result of the execution of the Operations in accordance with this Contract,

(v) the right of the Scottish Ministers to execute any part of the Operations on, over, under, in or through any land, and

(vi) damage that is the unavoidable result of the correct execution of the Operations (except where the Operating Company executes a Design as part of an Order and where subsequently the Operations and Defects Correction Operations for such Design are executed either by the Operating Company or under a Works Contract).

12.2.3 The Scottish Ministers shall, subject to the provisions of Clause 12.2.5 and Clause 12.2.6, indemnify the Operating Company from and against all claims, demands, proceedings, damages, costs, charges and expenses for the exceptions referred to in Clause 12.2.2.

12.2.4 The Operating Company's liability to indemnify the Scottish Ministers pursuant to Clause 12.2.1 shall be reduced in proportion to the extent that the negligent act or omission of the Scottish Ministers, or any contractor other than the Operating Company (not being employed by the Operating Company), may have contributed to the said death, injury, loss or damage.

12.2.5 The Scottish Ministers' liability to indemnify the Operating Company pursuant to Clause 12.2.3 shall be reduced in proportion to the extent that the act or neglect of the Operating Company may have contributed to the said death, injury, loss or damage.

12.2.6 The Scottish Ministers shall not be liable for any damages or compensation payable at law in respect of, or in consequence of, any accident or injury to any work person or person in the employment of the Operating Company, or any contractor, subcontractor, or supplier of any tier, except to the extent that such accident or injury results from, or has been contributed to, by the negligent act, omission or Default of the Scottish Ministers.

12.3 Insurance Generally

12.3.1 Upon execution of this Contract and prior to the Operating Company commencing any Operations, and without limitation to its liability under any other provisions of this Contract or at law, the Operating Company shall take out and maintain the insurances specified in paragraph 2 of Schedule 1, Annex 5.

12.3.2 The Operating Company shall not take any action or fail to take any action (including failure to disclose any fact) or permit anything to be done or not to be done that would entitle any insurer to:

(i) refuse to pay any sum, or

(ii) delay payment of any claim under any of the insurance, or

(iii) render any sum paid out under any of the insurance repayable in whole or in part.

12.3.3 All insurances will be subject to Scots Law and the exclusive jurisdiction of the Scottish Courts.

12.4 Underwriting Information, Placing Documents, Insurance Policies and Copies

12.4.1 The Operating Company shall, if requested by the Scottish Ministers, provide within seven days of such request copies of all information given to insurers at any time during the placement, alteration or currency of any insurance policy.

12.4.2 The Operating Company shall provide to the Scottish Ministers all insurance policies, endorsements, attachments, brokers' placing slips, market reform contracts,

electronic placing documents, market reform contract endorsements, electronic endorsements and any other documents necessary, or reasonably requested by the Scottish Ministers, to evidence that the required insurances are in place.

Each document shall be stamped, initialled and dated by all underwriters. Copies of original documents shall be certified in a manner acceptable to the Scottish Ministers.

12.4.3 The insurance documents specified in Clause 12.4.2 shall be provided:

(i) prior to Operations Commencement Date 1,

(ii) prior to the expiry of an existing insurance, and

(iii) within seven days of receiving a written request.

12.4.4 The requirements in Clause 12.4.2 for the provision of documents do not apply to professional indemnity insurance, for which a cover note issued by the insurance broker to the Operating Company detailing the period of insurance, limit of indemnity, participating insurers and their shares of the insurance, that the specific requirements of Table 2.1.1/A contained in Schedule 1, Annex 5 are catered for and any unusual terms and conditions is sufficient evidence of the existence of the insurance.

12.4.5 The Operating Company shall provide notice to the Scottish Ministers of any amendments and replacements of any of the insurance documents referred to in this Clause 12.4 and of other relevant documents previously given to the Scottish Ministers. The amended or replacement documents shall be provided within seven days of issue, whether or not requested by the Scottish Ministers.

12.4.6 The Operating Company shall provide to the Scottish Ministers evidence from the insurers that the premiums payable have been paid to the insurers and that the insurances are in full force and effect.

12.4.7 The Operating Company shall provide, and take all steps and give all necessary instructions to procure the provision of:

(i) the said policies and the other documents referred to in this Clause 12.4, and

(ii) such additional evidence of compliance with this Clause 12 as may be required by the Scottish Ministers.

12.4.8 The Operating Company shall procure, and take all steps necessary to ensure, that any information given and received in relation to any insurance policy required under this Contract (and any information held by third parties acting on behalf of the Operating Company) is retained for a period of not less than five years after the end of the Contract Period.

12.5 Rights of Subrogation, Non-Vitiation, Changes to Policy Provisions, Waiver of Disclosure Obligation and Notice of Cancellation

12.5.1 Except for the professional indemnity insurance requirement, the employers' liability insurance requirement and the motor insurance requirement, all of the insurance required under the provisions of this Contract shall be subject to:

(i) the waiver of all duties of disclosure, and

(ii) the waiver of any rights of subrogation,

insofar as the Scottish Ministers and their servants, agents and suchlike persons are concerned.

12.5.2 Except for the contractors' all risks insurance requirement, professional indemnity insurance requirement, the employers' liability insurance requirement, the motor insurance and the property damage insurance requirement all of the insurance required under the provisions of this Contract shall allow that actions between the insured parties shall be treated as though a separate insurance had been issued to each of them.

12.5.3 Except for the professional indemnity insurance requirement, the employers' liability insurance requirement and the motor insurance requirement all of the insurance required under the provisions of this Contract shall be subject to a non-vitiation provision, in order that the actions of the Operating Company or any other insured shall not prejudice the insurance, insofar as the Scottish Ministers are concerned.

12.5.4 All of the insurance required under paragraph 2 of Schedule 1, Annex 5 shall be subject to undertakings from the insurers and the Operating Company:

(i) to notify the Scottish Ministers in writing of any intention or request to amend the terms and conditions of the said insurance,

(ii) to obtain confirmation of the acceptance of these amendments from the Scottish Ministers, such acceptance not to be unreasonably withheld,

(iii) to provide to the Scottish Ministers in writing not less than 30 days' prior notice of cancellation or non-renewal of the said insurance, and

(iv) in the case of non-renewal by the Operating Company, to allow the Scottish Ministers the opportunity to renew the insurances in accordance with Clause 12.6.

12.6 Failure to Provide Suitable Evidence of Insurance

12.6.1 If, pursuant to Clause 12.4, the Operating Company fails to produce, when required, satisfactory evidence to the Scottish Ministers that there is in force any of the insurance required under this Contract and in the separate lease agreements between the Scottish Ministers and the Operating Company, the Scottish Ministers may:

(i) effect and keep in force any such insurance,

(ii) secure the renewal of such insurance,

(iii) pay any such premium as may be necessary for such purpose, and

(iv) deduct any amount so paid together with all recovery costs and expenses whatsoever incurred by the Scottish Ministers and their agents, servants and suchlike persons from the next payment or any subsequent payment due to the Operating Company pursuant to the provisions of this Contract or, at the option of the Scottish Ministers, recover such from the Operating Company on demand as a debt due to the Scottish Ministers.

12.6.2 Where the Operating Company fails to comply with any condition imposed by any insurance policy taken out pursuant to this Clause 12, or Schedule 1, Annex 5, or any other provisions of this Contract, the Operating Company shall indemnify the Scottish Ministers against all losses and claims arising from such failure.

12.6.3 Notwithstanding any other provisions of this Contract, the Scottish Ministers will take action in accordance with Clause 15 if the Operating Company fails to provide the Scottish Ministers with suitable evidence of insurance satisfying the requirements stated in this Clause 12, or in Schedule 1, Annex 5, or in any other provisions of this Contract.

SCHEDULE 1

PART 5 – MANAGEMENT SYSTEM AND CHANGE PROPOSALS

13. CLAUSE 13: MANAGEMENT SYSTEM

13.1 Management System

13.1.1 For the Contract Period, the Operating Company shall establish, document, implement, maintain and continually improve the effectiveness of the Management System in accordance with the requirements of Schedule 5 Part 1 and the other provisions of this Contract.

The purpose of the Management System is to ensure and demonstrate that all aspects of the Operations and all other matters for which the Operating Company is responsible under the terms of this Contract are executed in accordance with the terms of this Contract. Documented procedures in the Management System shall be such that, when followed, they ensure the effective management of the Operations.

13.1.2 The Operating Company shall provide to the Scottish Ministers for their written consent when produced or updated or when requested by the Scottish Ministers a Quality Plan that meets but is not limited by the requirements of Schedule 5 Part 1.

13.1.3 By no later than 60 days prior to Commencement of Service Date 1 the Operating Company shall submit its developed and detailed:

(i) Management System,

(ii) Quality Plan,

(iii) Winter Service Plan, and

(iv) Incident Response Plan,

to the Scottish Ministers for their written consent. At the time of submission, any software and computer programmes to be used by the Operating Company that are necessary for the operation of the systems shall be ready for use in the manner and detail required as stated in other provisions of this Contract.

By no later than 30 days prior to Commencement of Service Date 2 the Operating Company shall update such plans and Management System to take into account any changes required by, and following, the transition from Network 1 to Network 2 and shall submit such updates to the Scottish Ministers for their written consent.

13.1.4 The Operating Company shall periodically, as necessary for continued compliance with the provisions of this Contract, review and when necessary amend the Management System and Quality Plan and submit such amendments to the Scottish Ministers for their written consent. The Operating Company shall carry out such review and any amendment at intervals no greater than 6 months in each Annual Period.

13.1.5 During the execution of Operations, the Operating Company's performance under the Management System and the Quality Plan shall be examined and thereafter audited by the Performance Audit Group.

The Performance Audit Group will undertake regular and periodic:

(i) inspection,

(ii) monitoring,

(iii) spot checking,

(iv) auditing, and

(v) other examination and audit processes as it deems necessary,

of the Management System, the Quality Plan and all procedures and systems contained therein.

13.1.6 The Operating Company shall not commence, or permit the commencement of, any aspect of the Operations or any other matters for which the Operating Company is responsible under this Contract before those parts of the Management System which concern any such aspect of the Operations or such other matters have been completed.

For the purposes of this Clause, a part of the Management System shall be considered complete when it has been consented to in writing by the Scottish Ministers. Such consent shall not be unreasonably delayed and a response to submissions under Clause 13 shall be given by the Scottish Ministers within 21 days of receipt.

13.2 Failure by Operating Company to Perform its Obligations

13.2.1 Notwithstanding any other provisions of this Contract, where, in the opinion of the Scottish Ministers, the Operating Company fails satisfactorily to execute all or any of its obligations described in Clause 13.1, the Scottish Ministers will notify the Operating Company of the Default in writing.

13.2.2 Where, in the opinion of the Scottish Ministers, the Operating Company does not within a reasonable time take reasonable steps to rectify a Non-Conformance, the Scottish Ministers may notify the Operating Company in writing.

Where the Scottish Ministers have so notified the Operating Company pursuant to this Clause, they may thereupon make such arrangements and incur such costs and expenses as they consider reasonable for rectifying such Non-Conformance of the Operating Company and for securing compliance with the requirements of this Contract.

Notwithstanding any other provisions of this Contract, where audits by the Scottish Ministers or the Performance Audit Group identify a Non-Conformance by the Operating Company, the Scottish Ministers will be entitled to carry out additional audits of the Operations.

13.2.3 Actions by the Scottish Ministers pursuant to Clause 13.2.2 shall not entitle the Operating Company to any extra payment, or any extension of time, for completion of the Operations.

The Operating Company shall be liable for such actions of the Scottish Ministers under this Clause as though, for such purpose, the Operating Company had taken such actions itself.

13.2.4 The Scottish Ministers will particularise and notify in writing to the Operating Company on a monthly basis the amounts of any costs and expenses whatsoever incurred by the Scottish Ministers or by persons authorised to act on their behalf pursuant to this Clause.

All such amounts shall be recoverable as sums of money due from the Operating Company to the Scottish Ministers. Such sums shall be deducted from the next payment or any subsequent payment due to the Operating Company pursuant to the provisions of this Contract or, at the option of the Scottish Ministers, shall be recoverable on demand from the Operating Company as a debt due to the Scottish Ministers.

13.2.5 Where the Operating Company fails to submit changes to the Management System required pursuant to Clause 13.1, the Scottish Ministers may in writing notify the Operating Company of changes that are necessary for compliance with the requirements of this Contract.

In any such event, the Operating Company shall introduce such changes into the Management System forthwith.

In any such event, the Scottish Ministers shall be entitled to recover from the Operating Company:

(i) all costs and expenses whatsoever (including professional fees, staff costs, overheads and administrative costs),

(ii) all abortive costs, and

(iii) other sums,

that have been incurred where the Scottish Ministers have been acting as though they were the Operating Company.

All consequences on the Operating Company arising from the actions of the Scottish Ministers pursuant to this Clause shall be the responsibility of the Operating Company.

Where the Performance Audit Group has given written notice to the Operating Company, pursuant to the provisions of Schedule 5 Part 5, of an intention to execute an audit of any aspect of the Operations and where the Operating Company fails to provide the necessary staff, access, Records and facilities, the Scottish Ministers shall be entitled to recover from the Operating Company all abortive costs and expenses and any other sums properly incurred by the Performance Audit Group and the Scottish Ministers.

Without prejudice to the other rights and remedies that the Scottish Ministers may have, the Scottish Ministers shall be entitled to recover such costs and expenses and other sums referred to herein from the next payment or any subsequent payment due to the Operating Company pursuant to the provisions of this Contract or, at the option of the Scottish Ministers, shall be recoverable on demand from the Operating Company a debt due to the Scottish Ministers.

13.2.6 In taking any actions under Clause 13.2, the Scottish Ministers shall in respect of the Operating Company's Default as described therein be entitled to act as though they were the Operating Company.

13.3 Application to Subcontracts

13.3.1 The Operating Company shall ensure that a condition is inserted in each subcontract and order for goods and services forming part of the Operations whereby sub-contractors and suppliers shall institute, maintain and operate, for the term of this Contract, a Management System complying with the requirements of

Schedule 5 Part 1 and the other provisions of this Contract, for the purpose of ensuring and demonstrating that such goods and services comply with this Contract.

13.3.2 The Operating Company shall also ensure that a condition is inserted in each subcontract to provide for the Scottish Ministers access and facilities meeting the requirements of Clause 5.1.1 and of a standard sufficient to enable them to take such actions as they may consider necessary under this Clause 13.

13.4 Laboratories and Testing Schedules

13.4.1 All materials and workmanship shall be of the respective kinds described in any Order and in accordance with the Scottish Ministers' Requirements.

Such materials and workmanship shall be subjected to the samples and tests required or reasonably implied by the terms of this Contract and set out in the method statements forming part of the Management System or any Order.

13.4.2 Except as may be provided otherwise by this Contract, every sample and test required by this Contract shall be undertaken by a laboratory holding accreditation granted in respect of such sampling and testing:

(i) by the United Kingdom Accreditation Service (UKAS), or

(ii) by the European co-operation for Accreditation of Laboratories (EAL).

13.4.3 By no later than 60 days prior to Commencement of Service Date 1, the Operating Company shall provide to the Scottish Ministers a schedule of the tests and inspections that the Operating Company then considers to be necessary for the anticipated execution of Operations.

By no later than 30 days prior to Commencement of Service Date 2, the Operating Company shall provide to the Scottish Ministers an updated schedule of the tests and inspections that the Operating Company then considers to be necessary for the anticipated execution of Operations following Commencement of Service Date 2.

Within 21 days of receipt of the schedule of tests and inspections (or update thereto), the Scottish Ministers will either accept the schedule or inform the Operating Company of reasons why the coverage of the schedule is not adequate to ensure achievement of the Scottish Ministers' Requirements. In the latter event, the Operating Company shall submit a revised schedule for acceptance within 14 days of the Scottish Ministers' reply.

If no reply is received from the Scottish Ministers within 21 days of receipt of any submission of a schedule of tests and inspections, the Operating Company may remind the Scottish Ministers accordingly. If, seven days after the reminder is issued, no reply has been received from the Scottish Ministers, the schedule is deemed to be acceptable.

Thereafter, the said schedule shall be maintained by the Operating Company and supplemented as necessary from time to time to include such additional tests and inspections as may be required for compliance with any Order.

13.4.4 Inspection and test schedules and documentation (including any necessary processes) for recording compliance shall be provided under the Quality Plan and relevant copies of such schedules and documentation shall be provided to the Scottish Ministers prior to commencement of the activity concerned.

13.4.5 Where work items are required to be sampled, tested and or inspected in accordance with this Contract then such sampling, testing and or inspection is acknowledged by the Operating Company to be and is deemed for all purposes to be a material and essential part of the work item and the Operating Company shall become entitled to include within any Statement under Clause 10.3.1 the relevant work item only when the relevant sampling, testing and or inspection has been carried out and the test results demonstrate that the work item has been completed and is in accordance with this Contract. The Operating Company acknowledges that it is important for the Scottish Ministers to have Records which demonstrate that work items have been carried out in accordance with this Contract.

The Scottish Minsters shall be under no obligation to pay for and the Operating Company shall not seek payment for a work item that is required to be sampled, tested and or inspected in accordance with this Contract and such work item is either untested or has not yet passed the relevant test.

The Operating Company shall not carry out a work item that covers up an untested work item or which would make an untested work item inaccessible. In order for the untested work item to be tested the Scottish Ministers shall be entitled to instruct the Operating Company (at the Operating Company's cost) to remove or open up any such offending work item that the Operating Company carries out. The Scottish Ministers shall be under no obligation to pay for and the Operating Company shall not seek payment for any such offending work item until the untested work item has passed its test (provided always that the cost of opening up or removing the offending work item and repairing or reinstating the offending work item shall be met by the Operating Company).

13.4.6 Where the Scottish Ministers consider it necessary to undertake any tests under their own direction, independently of the Operating Company, the Operating Company shall provide such assistance, instruments, machines, labour, materials, temporary traffic management and safety measures and other resources as required for examining, measuring and testing any work and the quality, weight and quantity of any materials used, and shall supply samples of materials before incorporation in the Operations for testing as may be selected and required by the Scottish Ministers.

13.4.7 The provision of samples and testing shall be the responsibility of the Operating Company where such test is required by the other provisions of this Contract.

Such tests shall include, but shall not be limited to, tests under load and tests to ascertain whether the Design of any finished or partially finished work is fit for the purposes that it was intended to fulfil.

13.4.8 Where any test is instructed by the Scottish Ministers that is in addition to the requirements of this Contract, or is subject to an Order, the Scottish Ministers will subject as aftermentioned, only be responsible for the costs of the testing if the test shows the workmanship or materials to be in accordance with both the provisions of this Contract and the relevant Order. Where the results of previous tests have shown that the provisions of this Contract have not been met, the Scottish Ministers may instruct additional tests in circumstances where in their opinion it is reasonable to do so. The costs of such testing shall be borne by the Operating Company whatever the results of the same.

13.5 Operating Company Weekly Non-Conformance Reports

13.5.1 The Operating Company shall produce a report, to be issued to the Performance Audit Group at weekly intervals from the Operations Commencement Date 1 to the Service End Date, which shall schedule:

(i) the number,

(ii) the nature, and

(iii) details (sufficient to explain the nature and extent of the Non-Conformance),

of the Non-Conformances which have been recorded in the Management System by the Operating Company.

The weekly report shall also include the accumulated total of outstanding Non-Conformances which have not been closed out by the Operating Company in accordance with the requirements of the Management System at the time of preparing the report.

14. CLAUSE 14: OPERATING COMPANY PROPOSALS FOR CHANGE TO THE SCOTTISH MINISTERS' REQUIREMENTS

14.1 Process

14.1.1 The Operating Company may submit to the Scottish Ministers an Operating Company Change Proposal in relation to the Scottish Ministers' Requirements at any time following Operations Commencement Date 2.

Such Operating Company Change Proposal shall be in writing and refer expressly to this clause.

An Operating Company Change Proposal shall either:

(i) improve the efficiency of the Operations with a financial saving to the Scottish Ministers, or

(ii) improve the efficiency of the Operations at no additional cost to the Scottish Ministers, or

(iii) improve the efficiency of the Operations at additional cost to the Scottish Ministers.

14.1.2 Any Operating Company Change Proposal shall be accompanied by a full and detailed:

(i) explanation of the reasons for the proposed change,

(ii) explanation of how any risks associated with the proposed change shall be allocated,

(iii) explanation of how any trials of any proposed innovation shall be financed,

(iv) statement of any consideration that the Operating Company is seeking for making the innovation available to the Scottish Ministers, including but not limited to the release of any Intellectual Property Rights in the innovation,

(v) explanation of the benefits arising to the Scottish Ministers from the proposed change,

(vi) demonstration that such proposed change has no detrimental effect on the:

(a) environmental impact,

(b) safety,

(c) quality, and

(d) performance,

of the Operations and the Unit,

(vii) demonstration that such proposed change is not prejudicial in any way to the safety of users of the Unit, or any other person affected by, or involved in, the performance of the Operations,

(viii) explanation of any consequential changes required to any of the Scottish Ministers' Requirements, and

(ix) substantiation that such proposed change would be acceptable to any third party whom the Operating Company is obliged to consult in regard to, or whose consent is required for the implementation of, such proposed change.

14.1.3 Any Operating Company Change Proposal shall also include proposed changes to Schedule 2 Part 1 and Schedule 2 Part 2. Such proposed changes shall only relate to the Operating Company Change Proposal submitted.

Each rate or price change or additional rate or price proposed shall be accompanied by a submission detailing its evaluation and assessment.

If an Operating Company Change Proposal leads to cost savings resulting from a change to the Scottish Ministers' Requirements, the savings shall be shared equally between the Scottish Ministers and the Operating Company.

Any additional costs of Operations resulting from the acceptance of an Operating Company Change Proposal shall be borne by the Scottish Ministers.

For the purpose of this Clause 14, costs mean the costs to the Scottish Ministers as calculated by application of the principles referred to in Clause 10.1, together with other expenses incurred by the Scottish Ministers as a result of the Operating Company Change Proposal.

14.1.4 In the case of a proposal where the savings are shared equally between the Operating Company and the Scottish Ministers, the proposed new rates and prices shall include the share of the savings due to the Operating Company.

14.1.5 All the costs and expenses of whatsoever nature associated with the preparation and implementation of any proposed change to the Scottish Ministers' Requirements as a result of an Operating Company Change Proposal shall be the responsibility of the Operating Company.

Such costs shall include any costs and expenses incurred by the Scottish Ministers in coming to a decision whether or not to accept the proposal.

All such costs incurred by the Scottish Ministers will be deducted from the next payment or any subsequent payment due to the Operating Company pursuant to the provisions of this Contract or, at the option of the Scottish Ministers, shall be recoverable on demand from the Operating Company as a debt due to the Scottish Ministers.

14.1.6 The acceptance of an Operating Company Change Proposal shall be at the discretion of the Scottish Ministers. If the Scottish Ministers do not accept the Operating Company Change Proposal, they will inform the Operating Company in writing within 14 days of receipt of all satisfactory supporting information or the completion of any trials or demonstrations, whichever is the later.

Where the Scottish Ministers are prepared to accept any such change to the Scottish Ministers' Requirements, an Operating Company Change Proposal is implemented by being subject to an Order issued pursuant to this Clause 14.

14.1.7 The Order issued to implement a change to the Scottish Ministers' Requirements may include:

(i) reference to this sub-clause,

(ii) a statement of the changes made to the Scottish Ministers' Requirements,

(iii) the effective date for such changes to the Scottish Ministers' Requirements,

(iv) changes made to Schedule 2 Part 1 and Schedule 2 Part 2, and

(v) a statement that the Order is not effective until the effective date stated in the Order.

SCHEDULE 1

PART 6 – DEFAULT, TERMINATION AND FRUSTRATION

15. CLAUSE 15: DEFAULT AND STEP-IN RIGHTS PROVISIONS

15.1 Rights on Default without Prejudice to Termination Rights

15.1.1 The Scottish Ministers' rights under this clause shall be without prejudice to, and in addition to, the provisions of, and their rights under Clause 13 and Clause 16.

15.2 Remedial Notices

15.2.1 Where the Operating Company commits any Default that is capable of remedy, the Scottish Ministers may, subject to the provisions of Clause 5.6.1 and Clause 5.6.2, issue a Remedial Notice requiring the Operating Company to remedy such Default.

The Scottish Ministers, having reasonable regard to the nature of the Default, will specify in a Remedial Notice the Remedial Period during which the Default shall be remedied.

The Operating Company shall remedy the Default during the Remedial Period.

15.2.2 The Operating Company shall only be entitled to dispute a Remedial Notice or the reasonableness of the Remedial Period if it gives written notice of such a Dispute to the Scottish Ministers within 14 days of receipt of such Remedial Notice.

15.3 Notices of Non-Conformance

15.3.1 In addition to the rights of the Scottish Ministers under Clauses 15.2, the Performance Audit Group may issue to the Operating Company a Notice of Non-Conformance in respect of any Non-Conformance, provided that the Scottish Ministers, in exercise of their discretion, have not at that time issued a Remedial Notice in respect of that Non-Conformance.

A Notice of Non-Conformance shall contain details of the Non-Conformance, a reference to the contractual basis of the Non-Conformance, a period of time or a date by which the Non-Conformance is to be corrected, and, if appropriate, other information and requirements of the Scottish Ministers applicable to the correction of the Non-Conformance.

A Notice of Non-Conformance shall be valid if it contains a description of the Non-Conformance and the date when the existence of the Non-Conformance became known to either the Scottish Ministers or the Performance Audit Group.

15.3.2 On receipt of a Notice of Non-Conformance, the Operating Company shall, within any timescale referred to in such Notice of Non-Conformance or as subsequently agreed with the Performance Audit Group, correct such Non-Conformance, including where appropriate:

(i) remedying the Default,

(ii) correcting the Defect,

(iii) taking action to achieve the required standard of service,

(iv) performing its obligation in accordance with this Contract in a timely manner and without delay,

(v) processing the Non-Conformance in accordance with the Management System, or

(vi) taking action to prevent a reoccurrence of the Non-Conformance.

The Operating Company shall, within any timescale referred to in such Notice of Non-Conformance or as subsequently agreed with the Performance Audit Group, submit a report of the resolution of the Non-Conformance to the Performance Audit Group for its consideration.

15.3.3 Where a Non-Conformance has not been resolved to the satisfaction of the Performance Audit Group or the Performance Audit Group considers the Operating Company's report of the resolution of the Non-Conformance to be unsatisfactory the Performance Audit Group shall give its reasons to the Operating Company within 14 days of receipt of the unsatisfactory report. Within seven days of the Performance Audit Group's notification, the Operating Company shall notify the Performance Audit Group of the further action that the Operating Company will take in relation to the Non-Conformance, together with the timescales for such action.

If the Performance Audit Group remains dissatisfied by the Operating Company's proposals or the resolution of the Non-Conformance, the Performance Audit Group shall so advise the Scottish Ministers.

The Director will consider the report of the Performance Audit Group and, if satisfied that the Operating Company has committed a Default, the Scottish Ministers will issue a Remedial Notice. If the Default has been remedied by the Scottish Ministers and further remedial action is not required, a Remedial Notice may nevertheless be issued to record the Default.

15.3.4 The Operating Company shall maintain a register of Notices of Non-Conformance.

A copy of the register shall be provided by the Operating Company at weekly intervals to the Director together with a report on the progress made by the Operating Company in resolving each Non-Conformance.

The rights of the Scottish Ministers under Clause 15.2 to issue a Remedial Notice shall not be affected by the issue, or the non issue, of a Notice of Non-Conformance in relation to any matter or to any action taken or not taken by the Operating Company.

15.4 Scottish Ministers' Step-in Rights – Defaults

15.4.1 Where, by the expiry of the Remedial Period specified in a Remedial Notice, the Operating Company has failed to remedy the Default and the Scottish Ministers do not opt to exercise their option to terminate this Contract under Clause 16.1.3, the Scottish Ministers shall be entitled to remedy such Default themselves or to employ other persons to remedy such Default, provided that they first notify the Operating Company in writing of their intention to do so.

15.4.2 If the Scottish Ministers opt to remedy an Operating Company’s Default, they may take such actions as they consider prudent or necessary as a consequence of such Default.

15.4.3 The Scottish Ministers shall be entitled to recover from the Operating Company all and any proper and reasonable costs and expenses incurred by the Scottish Ministers, or incurred on their behalf, to remedy such Default under this Clause 15.4.

Costs payable by the Operating Company under this Clause include any payments made by the Scottish Ministers to third parties as a result of the Operating Company's Default. If the Operating Company's Default leads the Scottish Ministers to believe that there may be further Defaults by the Operating Company which at the time have not been discovered by the Scottish Ministers or the Performance Audit Group, the Scottish Ministers may take such other additional actions, or instruct others to take such additional actions on their behalf, as they consider prudent or necessary to establish the extent of any further Defaults.

15.4.4 For the purpose of this Clause 15.4, the additional actions may include actions taken for an indefinite period as a result of the Scottish Ministers' concern that a Default or Defaults may otherwise occur or continue to occur.

Any costs and expenses properly incurred by the Scottish Ministers, or on their behalf, as a consequence of such additional actions shall be payable by the Operating Company.

15.4.5 Any liability, cost, loss and or expense incurred by the Scottish Ministers, or on their behalf, as a result of their breach of an obligation to others, arising as a consequence of the Operating Company's Default, shall be payable by the Operating Company.

15.4.6 In addition to any payments due to the Scottish Ministers under this Clause 15.4 as a consequence of a Default by the Operating Company, the Operating Company shall pay to the Scottish Ministers "the Non-Execution Adjustment".

The Non-Execution Adjustment is calculated by multiplying the sum of all other amounts due under this Clause 15.4 by the Non-Execution Adjustment percentage.

The Non-Execution Adjustment percentage is 12.5%.

15.4.7 Such liabilities, losses and expenses together with the Non- Execution Adjustment shall be deducted from the next payment or any subsequent payment due to the Operating Company pursuant to the provisions of this Contract or, at the option of the Scottish Ministers, shall be recoverable on demand from the Operating Company as a debt due to the Scottish Ministers.

15.5 Lane Occupation Charges

15.5.1 Where there is a Lane Occupation and the Operating Company has either:

(i) abandoned the execution of the Operations for a period exceeding 24 hours to the extent that no material progress has (in the opinion of the Scottish Ministers) been achieved in that period in the execution of the Operations, or

(ii) not (in the opinion of the Scottish Ministers) progressed with due skill, care and diligence and this has (in the opinion of the Scottish Ministers) resulted in a delay to the execution of the Operations,

the Scottish Ministers shall be entitled to charge the Operating Company a Lane Occupation Charge, for each calendar day or part thereof that the said Operations have been abandoned or delayed, at the appropriate charge rates as set out in Schedule 1, Annex 3.

15.6 Scottish Ministers' Redress – Failure to Comply with Audit Requirements

15.6.1 Notwithstanding any other failure by the Operating Company in the performance of its obligations under this Contract, where, in accordance with the requirements of Schedule 5 Part 5, the Scottish Ministers or the Performance Audit Group:

(i) have served due notice of an intention to execute an audit, or

(ii) execute an ad-hoc unannounced audit,

and the Operating Company:

(i) fails to allow unrestricted access to the Scottish Ministers or the Performance Audit Group on any date, time or location identified in such notice or fails to allow unrestricted access for an ad hoc unannounced audit, or

(ii) fails to provide all necessary resources and assistance (including but not limited to staff), or

(iii) fails to provide the information required under this Contract to be available for the audit, or

(iv) fails to provide and make available information that should be available in accordance with the provisions of this Contract, or

(v) withholds information from the Scottish Ministers or the Performance Audit Group, or

(vi) provides information that is found to be incorrect in that it does not comply with the requirements of this Contract,

the Operating Company shall be liable for all abortive and additional costs, including but not limited to the costs of:

(i) carrying out additional audits, and

(ii) procuring additional audit resources to re-execute such audits, and

(iii) procuring all necessary information that should be properly made available by the Operating Company at such audits,

incurred by the Scottish Ministers and the Performance Audit Group associated with any such failure.

15.7 Recovery of Scottish Ministers' Costs

15.7.1 The Scottish Ministers shall be entitled to recover from the Operating Company all losses, expenses, abortive costs and additional costs referred to in this Clause 15.

Without prejudice to the other rights and obligations that the Scottish Ministers may have, the Scottish Ministers shall be entitled to and shall recover such losses, costs and expenses from the next payment or any subsequent payments thereafter due to be paid to the Operating Company pursuant to the other provisions of this Contract or, at the option of the Scottish Ministers, shall be recoverable on demand from the Operating Company as a debt due to the Scottish Ministers.

15.8 No Waiver

15.8.1 A waiver by the Scottish Ministers of any Default of the Operating Company shall not constitute a waiver of any subsequent Default.

Failure by the Scottish Ministers at any time to enforce any provisions of this Contract, to require strict performance by the Operating Company of any of the provisions of this Contract or to exercise any right or remedy to which they are entitled hereunder shall not be construed as a waiver of any such provision. Such failure shall not affect the validity of this Contract or any part thereof or the right of the Scottish Ministers to enforce any provision in accordance with its terms.

15.9 Other Rights

15.9.1 The rights of the Scottish Ministers under this Clause 15 are in addition and without prejudice to any other right the Scottish Ministers may have to claim the amount of any loss or damage suffered by the Scottish Ministers on account of the acts, omissions or default of the Operating Company (whether or not pursuant to any bond, guarantee or surety held by the Scottish Ministers) in connection with any part of the execution of the Operations or on account of any other matter for which it is liable in connection with this Contract.

16. CLAUSE 16: TERMINATION PROVISIONS

16.1 Termination of this Contract

16.1.1 The Scottish Ministers may at any time, by notice in writing to the Operating Company, terminate this Contract with immediate effect in the event that any one or more of the following occurs:

(i) there has been a change of control, including but not limited to a cumulative change of ownership as defined in Section 719 of the *Corporation Tax Act 2010*, in the Operating Company or any company that is the ultimate holding company of the Operating Company, or

(ii) if a Relevant Entity suffers an Insolvency Event, or

(iii) where the Operating Company (and or any relevant contractor or sub-contractor) fails to comply with Clause 22A.1. or

(iv) the Operating Company (and or of its sub-contractors of whatever tier) commits a breach of Clause 19.8.

16.1.2 Without prejudice to any other right or remedy that the Scottish Ministers may have, the Scottish Ministers may at any time by notice in writing terminate this Contract with immediate effect in the event that:

(i) the Operating Company has failed to remedy a Default within the Remedial Period specified in any relevant Remedial Notice issued by the Scottish Ministers, or

(ii) the Operating Company commits a Default that is not capable of remedy.

16.1.3 If the Operating Company fails to submit to the Scottish Ministers, the Management System in acceptably documented form,

no later than 60 days before Commencement of Service Date 1 and prior to any Operations commencing on Site, the Scottish Ministers shall be entitled to terminate this Contract at any time thereafter by written notice to the Operating Company.

For the purposes of this Clause, an acceptable Management System is one that is immediately available for use in the manner and detail stated elsewhere in this Contract.

16.1.4 In addition to any other right or power to terminate this Contract stated elsewhere in the Contract, the Scottish Ministers may at their discretion terminate this Contract by issuing a written notice of termination to the Operating Company. The effective date of termination shall be stated on the notice of termination and shall not be earlier than 85 days after the date of receipt of the notice of termination by the Operating Company. The Scottish Ministers may procure others to undertake the work to complete the Operations that may have been carried out had the Contract not been terminated.

16.1.5 Nothing in Clauses 16.1.1 to 16.1.4 shall affect or prejudice in any way any right to terminate this Contract that the Scottish Ministers may have by virtue of any other term of this Contract, statute, or remedy at law.

16.1.6 Where this Contract is terminated pursuant to any of Clauses 16.1.1 to 16.1.3, the Scottish Ministers may make other arrangements for work to be carried out by others to complete the Operations. The Scottish Ministers shall be entitled to recover from the Operating Company and the Operating Company shall pay the cost of:

(i) making such arrangements (including but not limited to the full costs of the preparation of tendering documents and the running of the tendering procedure and award process),

(ii) any additional expenditure incurred by the Scottish Ministers in the execution of the work to complete the Operations over and above that which would reasonably have been expected to be incurred under this Contract in obtaining the execution of the Operations during the unexpired portion of this Contract had this Contract not been terminated,

(iii) damages for delay in completion (if any),

(iv) Lane Occupation Charges (if any), and

(v) all other expenses incurred by or on behalf of the Scottish Ministers.

In the event that the Scottish Ministers have extended Service Delivery Period 2 beyond the Initial Service End Date or the Service End Date and thereby the Contract Period as provided for elsewhere in this Contract, the Operating Company shall pay to the Scottish Ministers such costs and additional expenditure in respect of such extended Contract Period.

16.1.7 Following the issue of a notice of termination, the Scottish Ministers shall not be liable to pay to the Operating Company any sums due in accordance with this Contract until the later of the Termination Date and the date when the Scottish Ministers have established and calculated to their satisfaction:

(i) the sums that may be due from the Operating Company to the Scottish Ministers in accordance with the provisions of this Clause 16.1, including the costs of completion of the Operations,

(ii) damages for delay in completion (if any),

(iii) Lane Occupation Charges (if any), and

(iv) all other expenses incurred by or on behalf of the Scottish Ministers.

Thereafter, the Operating Company shall be entitled to receive any sums that would otherwise have been due to the Operating Company less any amounts payable to the Scottish Ministers under this Contract.

Any such sums due under this Clause 16.1.7 shall become payable on the later of the Termination Date and the date on which the sum due was established in accordance with this Clause 16.1.7. The final date for payment shall be the date falling 28 days following the date that has been so ascertained.

If such amount exceeds the sum that would otherwise have been payable upon demand, the Operating Company shall pay to the Scottish Ministers the amount of such excess. The sum shall be deemed to be a debt due by the Operating Company to the Scottish Ministers, and such sum shall be recovered accordingly in terms of this Clause 16.1.7.

16.1.8 The Unit, all depots, buildings and areas made available, to the Operating Company by the Scottish Ministers shall be vacated on termination and or abandonment of this Contract and returned to the Scottish Ministers within 14 days in the condition specified in this Contract and (subject to Clause 11.1.10) the Operating Company shall remove all Constructional Plant, materials, rubbish, temporary work of every kind, traffic management equipment, goods and materials within such 14 day period. If the Operating Company shall fail to return the Unit, all depots, buildings and areas made available in the condition specified in this Contract and or to remove any such Constructional Plant materials, rubbish, temporary work of every kind, traffic management equipment, goods and materials, within such 14 day period, then the Scottish Ministers may at their option:

(i) make good the condition of the Unit, and all depots, buildings and areas made available,

(ii) clear any remaining items which ought to have been removed,

(iii) sell or otherwise dispose of any such items which are the property of the Operating Company, and

(iv) return any such items that are not the property of the Operating Company to the owner thereof at the Operating Company's expense,

provided always that the Scottish Ministers will, after deducting from any proceeds of any sale the costs, charges and expenses in connection with such making good, clearance, sale or return as aforesaid, pay the balance (if any) to the Operating Company.

To the extent that the proceeds of any such sale are insufficient to meet all such costs, charges and expenses of the Scottish Ministers, the excess shall be a debt due from the Operating Company to the Scottish Ministers. Such excess shall be deducted from the next payment or any subsequent payment due to the Operating Company pursuant to the provisions of this Contract or, at the option of the Scottish Ministers, shall be recoverable on demand from the Operating Company as a debt due to the Scottish Ministers.

16.1.9 Following termination of this Contract pursuant to any of Clauses 16.1.1 to 16.1.4 and Clause 17.3 Scottish Ministers shall have free use of the Operating Company’s Plant and equipment in accordance with Clause 11.1.10.

16.1.10 The provisions of any Clause of this Contract necessary for its interpretation or enforcement shall survive the expiry or termination of this Contract.

17. CLAUSE 17: FRUSTRATION AND WAR PROVISIONS

17.1 Frustration

17.1.1 Where this Contract is frustrated by any supervening event other than war that may occur independently of the will of the Parties, the Operating Company may abandon this Contract if execution of the Operations is not possible for 28 days from the start of the supervening event. In such an event the sum payable by the Scottish Ministers to the Operating Company for Operations executed shall be the same as that which would have been payable under Clause 17.4 in the event of abandonment pursuant to Clause 17.2.

17.2 War

17.2.1 Where during the currency of this Contract there is an outbreak of war (whether war is declared or not) in which the United Kingdom is engaged on a scale involving general mobilisation of the armed forces of the Crown:

(i) the Operating Company shall for a period of 28 days, reckoned from 00:00 hours on the day after the order for general mobilisation is given, continue so far as reasonably possible to execute the Operations in accordance with this Contract, and

(ii) if the execution of the Operations has not been achieved before the said period of 28 days has expired, the Operations shall thereupon be deemed to be abandoned, unless the Operating Company and the Scottish Ministers otherwise in writing agree.

17.3 Removal of Constructional Plant

17.3.1 The Unit, and all depots, buildings and areas made available, to the Operating Company by the Scottish Ministers shall be vacated and cleared of Constructional Plant, equipment and materials on abandonment of the Operations in accordance with the provisions of Clause 16.1.8.

17.4 Payment on Abandonment of Operations

17.4.1 Upon abandonment of the Operations pursuant to Clauses 17.1 or 17.2, the Scottish Ministers shall pay to the Operating Company (except where such amounts have not already been the subject of earlier payments made to the Operating Company):

(i) the Contract value of all parts of the Operations carried out before the date of abandonment,

(ii) the sums payable for any mobilisation or setting up costs for any Operations, so far as such part of the Operations have been executed,

(iii) the cost of materials and goods ordered by the Operating Company for the Operations in accordance, and in compliance, with the terms of Clause 11.2 that have been delivered to the Operating Company and to which the Scottish Ministers have acquired title and ownership in accordance with Clause 11.2.2 save that the Scottish Ministers will be under no obligation to use these for completion of the Operations,

(iv) an amount of any expenditure properly incurred by the Operating Company in the expectation of executing the whole of any Ordered Operations, where such expenditure has not already been recovered by any other payments referred to in this Clause 17.4,

(v) an amount of any expenditure properly incurred by the Operating Company in the expectation of executing the whole of the Core Operations, where such expenditure has not already been recovered by any other payments referred to in this Clause 17.4, and

(vi) all proper costs of removal referred to in Clause 17.3.

To this end and without prejudice to the provisions of this Clause 17.4, the provisions of Clause 10.3 shall apply to this clause as if the date of such abandonment was the date of expiry of the Non-Conformance Liability Period.

17.4.2 Where, at any time before the end of the 28 day period referred to in Clause 17.2, any part of the Operations has been executed so far as to be usable, all provisions of this Contract shall have full force and effect except that the Operating Company, in lieu of fulfilling its obligations under Clauses 5.5 and 5.8, shall be entitled at its option to allow against the sum due to it under the provisions of this Contract the cost (calculated at the prices ruling at the beginning of the said period of 28 days) as notified in writing to the Operating Company by the Scottish Ministers that the Operating Company would have been liable for under the said clauses had they continued to be applicable.

17.4.3 The Scottish Ministers shall not be entitled, pursuant to this Clause 17.4, to withhold payment under Clause 10.3 of the retention money or any part thereof.

17.4.4 Except as stated in Clause 17.4.2, this Contract shall continue to have full force and effect.

SCHEDULE 1

PART 7 – DISPUTES RESOLUTION

18. CLAUSE 18: DISPUTES RESOLUTION

18.1 Disputes

18.1.1 As soon as the Scottish Ministers or Operating Company are aware of a potential Dispute, they shall so notify the other Party in writing.

The Director and the Operating Company shall meet within seven days of receipt of such notification to try to resolve the potential Dispute.

If the potential Dispute is not resolved within a reasonable period of time (such period of time to be agreed by the Director and Operating Company at the aforementioned meeting) the Parties shall define in writing those parts of the potential Dispute that remain unresolved.

18.1.2 Disputes shall be resolved in accordance with the provisions set out in this Clause 18 . The disputes resolution procedures are adjudication and arbitration.

Notwithstanding the provisions of Clause 18.1.1, where any Dispute arises between the Parties either Party may serve notice in writing (hereinafter referred to as a "Notice of Dispute") at any time on the other to refer the Dispute to adjudication.

18.1.3 The Notice of Dispute shall contain but not be limited to the following:

(i) date of the Notice of Dispute,

(ii) a concise summary of the nature and background of the Dispute and the issues arising,

(iii) the relevant clauses in this Contract that the party giving notice believes gives the basis of entitlement,

(iv) a statement of the relief claimed,

(v) the date of the relevant Claim Notification (if relevant), and

(vi) if not previously appointed, suggested name (or names) of an Adjudicator.

18.1.4 Unless this Contract has already been terminated or abandoned pursuant to the other provisions of this Contract, the existence of a Dispute shall not alter the obligations of the Parties under this Contract.

18.1.5 Any decision of the Adjudicator shall be final and binding upon the Parties, unless and until there is either:

(i) a final determination by legal proceedings, or

(ii) a subsequent amicable settlement between the Parties specifically setting aside the decision of the Adjudicator, or

(iii) the Dispute is referred to arbitration and an arbitral award has been made.

18.1.6 Unless this Contract has already been terminated by the Scottish Ministers the Operating Company shall in every case continue to proceed with the Operations with all due diligence regardless of the nature of any Dispute.

18.1.7 Where either Party intends to register any decision of an Adjudicator in the Books of Council and Session for preservation and execution the other Party, shall on being requested to do so, forthwith consent to such registration by subscribing the decision before a witness.

18.2 Adjudication

18.2.1 The adjudication procedure is as set out in Schedule 1, Annex 1.

18.2.2 Unless the Parties agree otherwise in writing:

(i) any concessions made by one Party to the Adjudicator, or

(ii) any concessions or agreements (other than a settlement agreement) that are made in the course of discussions pursuant to settlement of a Dispute,

shall be without prejudice and shall not be raised by either Party in any subsequent arbitration or other legal proceedings.

18.3 Arbitration

18.3.1 Without prejudice to the entitlement of either Party to refer any Dispute to adjudication in accordance with Clause 18.1.2, where any Dispute arises between the Parties it shall be referred to arbitration except where such Dispute relates to the enforcement of any decision of an Adjudicator appointed to determine a Dispute. Either Party may serve a notice in writing on the other to refer the Dispute to the arbitration of a single arbitrator. Such notice shall be referred to as a "Notice of Arbitration".

18.3.2 Where the Adjudicator's decision pursuant to Clause 18.2:

(i) is not accepted by either of the Parties, or

(ii) where the Adjudicator has failed to make a decision in accordance with the procedure and timescales set out in Clause 18.1 and Clause 18.2 and Schedule 1, Annex 1, or

(iii) where, subsequent to the Adjudicator's decision concerning the Dispute, the Adjudicator's decision is not accepted by one of the Parties and the Parties have failed to reach an amicable settlement between themselves,

either Party may serve a notice in writing on the other to refer the Dispute to the arbitration of a single arbitrator by a Notice of Arbitration.

18.3.3 The Notice of Arbitration shall contain the following:

(i) date of the Notice of Arbitration,

(ii) description of the Dispute,

(iii) where applicable, the relevant findings in the Adjudicator's decision which the Party giving notice disputes,

(iv) a statement of the relief claimed,

(v) where applicable, the date of the relevant Adjudicator's decision, and

(vi) if not previously appointed, suggested name (or names) of an arbitrator.

18.3.4 The arbitrator shall be agreed in writing between the Parties or (failing such written agreement between the Parties, within 30 days of either Party serving on the other a written notice to concur in the appointment of an arbitrator) a person to be appointed

on the application of either Party to the President for the time being of the Institution of Civil Engineers.

18.3.5 If an arbitrator:

(i) declines the appointment, or

(ii) after appointment shall be removed by the parties, a third party or by order of a competent court, or

(iii) shall be incapable of acting, or

(iv) resigns or dies,

and the Parties do not within 30 days of the vacancy arising fill the vacancy then the President of the Institution of Civil Engineers may on the application in writing of either Party appoint an arbitrator to fill the vacancy.

18.3.6 Any such reference to arbitration shall be made and any arbitration shall be conducted in accordance with the *Arbitration (Scotland) Act 2010* and the *Scottish Arbitration Rules* as supplemented by, and insofar as not inconsistent with, the procedures set out in this Clause 18.3. .

18.3.7 The powers of the arbitrator shall be as set out in the *Arbitration (Scotland) Act 2010* and the *Scottish Arbitration Rules* together with the following additional powers:

The arbitrator shall have power to:

(i) ascertain and award any sum which ought to have been referred to, or included, in any Statement,

(ii) open up, review, and revise any decision, opinion, instruction, direction, notice (with the exception of statutory notices), objection, Statement, or any other documentation relevant to the Dispute referred to arbitration, of any person given or made pursuant to this Contract relating in any way to the Dispute referred to arbitration save as otherwise expressly provided within this Contract, and

(iii) determine all matters in dispute which shall be submitted to arbitration as if no such decision, opinion, instruction, direction, notice (with the exception of statutory notices), objection, Statement, or any other documentation relevant to the Dispute referred to arbitration had been given.

18.3.8 The award of the arbitrator shall be final and binding on the Parties.

18.3.9 A person who has acted as adjudicator in a Dispute arising out of or concerning this Contract shall not be eligible for appointment as an arbitrator unless the Parties both agree otherwise in writing.

SCHEDULE 1

PART 8 – STATUTORY, CONTRACTUAL AND LEGAL REQUIREMENTS

19. CLAUSE 19: STATUTORY, CONTRACTUAL AND LEGAL REQUIREMENTS

19.1 New Roads and Street Works Act 1991

19.1.1 For the purposes of this Contract all expressions common to the *New Roads and Street Works Act 1991* and the *Transport (Scotland) Act 1995* and Clauses 19.1.1 to 19.1.3 shall have the same meaning as that assigned to them by the *New Roads and Street Works Act 1991* unless the context otherwise shall require a different meaning.

19.1.2 In respect of the *New Roads and Street Works Act 1991* the Scottish Ministers have delegated and do hereby delegate to the Operating Company those Statutory Functions in respect of the *New Roads and Street Works Act 1991* as stated in Schedule 7 Part 5 of this Contract.

19.1.3 Thereafter the Scottish Ministers shall notify the Operating Company from time to time in writing of any changes required in respect of such delegated Statutory Functions.

19.1.4 The changes to the Statutory Functions referred to in Clause 19.1.3 are deemed to be incorporated into Schedule 7 Part 5 of this Contract when notice is given to the Operating Company under Clause 19.1.3.

19.2 Royalties

19.2.1 Subject to the other provisions of this Contract the Operating Company shall pay all:

(i) tonnage royalties and other such payments,

(ii) other royalties,

(iii) rent,

(iv) other payments, and

(v) compensation (if any),

for supplying materials required for Operations.

19.3 Interference with Adjoining Land and Properties

19.3.1 Except where this Contract provides otherwise, the Operations shall be executed so as not to interfere with:

(i) the convenience of all third parties including the public,

(ii) access to public or private roads, footpaths or properties, and

(iii) occupation of adjoining land or properties, whether in possession of the Scottish Ministers or any other person.

19.3.2 The Operating Company shall take all necessary measures to prevent damage, loss, injury or nuisance caused by, or in connection with, the Operations.

19.3.3 All parts of the Operations shall be carried out without unreasonable noise and disturbance and the Operating Company shall be responsible for any liability on

account of noise or other disturbance or nuisance created whilst executing Operations under this Contract.

19.3.4 The Operating Company shall take all necessary precautions to fulfil the commitments set out in the Environmental Statement contained in Schedule 5 Part 8 in connection with any watercourses, drains, waterways and bodies of water to prevent any:

(i) interference with the supply to or abstraction from such sources,

(ii) silting,

(iii) erosion of their beds or banks, and

(iv) Pollution of the water,

which would affect adversely the quality or appearance thereof or cause injury or death to animal, aquatic or plant life.

19.3.5 The Operating Company shall indemnify and keep indemnified the Scottish Ministers against any claims, demands, proceedings, damages, costs, charges and expenses whatsoever in relation to any of the matters, liabilities and responsibilities referred to in, and or in respect of breach of Clauses 19.3.1 to 19.3.4, 19.4.1 and 19.4.2.

19.4 Avoidance of Damage to Roads

19.4.1 The Operating Company shall use all reasonable means to prevent any of the roads and bridges on the routes leading to the Unit from being subjected to extraordinary traffic within the meaning of Section 96 of the *Roads (Scotland) Act 1984* by any traffic of the Operating Company or any of its sub-contractors and or suppliers of any tier, agents, representatives and suppliers.

19.4.2 The Operating Company shall be liable for all claims for damage to any road or bridge on routes leading to, or within, the Unit caused by extraordinary traffic, as described in Clause 19.4.1.

Such liability shall include any claims made by any competent authority directly against the Scottish Ministers pursuant to any Legislation and the Operating Company shall negotiate and pay all claims arising out of such damage.

19.4.3 In undertaking Operations, the Operating Company shall select routes and use vehicles and restrict and distribute loads so that:

(i) any extraordinary traffic, as described in Clause 19.4.1, as shall inevitably arise from the moving of manufactured articles, fabricated articles, equipment, and material to or from and to the Unit shall be limited as far as reasonably possible, and

(ii) no unnecessary damage or injury is caused to such roads and bridges.

19.4.4 The Operating Company is responsible for, and shall pay the cost of, the strengthening of bridges and altering or improving of any road to facilitate the movement of Constructional Plant and associated Operations.

19.4.5 Should any damage occur to any bridge or road in the execution of the Operations, the Operating Company shall notify the Scottish Ministers in writing of the event as soon as it becomes aware of such damage or of a claim from an authority entitled to make such claim.

19.4.6 Where under any Legislation a haulier is required to indemnify the relevant authority against damage, the Scottish Ministers shall not be liable for any claim in respect thereof or in relation thereto.

In all other cases the Scottish Ministers shall negotiate the settlement of and pay all sums due in respect of such claim. The Scottish Ministers shall indemnify the Operating Company in respect thereof and shall be liable for all associated claims.

Should any claim, in the opinion of the Scottish Ministers, be due to any failure on the part of the Operating Company to observe and perform its obligations under Clause 19.4.1, then the amount notified in writing to the Operating Company by the Scottish Ministers to be due to such failure shall be paid by the Operating Company to the Scottish Ministers or deducted from any sum due, or that may become due, to the Operating Company.

19.4.7 Without prejudice to the provisions of Clauses 19.4.1 to 19.4.4, the Operating Company shall comply with, and ensure that its contractors, agents, representatives, suppliers and sub-contractors of any tier, shall comply with the requirements of the relevant road order for routeing of vehicles.

In specifying routeing requirements, the Scottish Ministers do not warrant in any way that such route(s) will be available in full or in part for the whole or any part of the Contract Period.

The Operating Company shall provide, erect and maintain in good condition traffic signs of a type consented to by the Scottish Ministers giving effect to these routeing requirements.

19.5 Fossils and Antiquities

19.5.1 All fossils, coins, articles of value or antiquities, and structures or other remains or things of geological or archaeological interest discovered in the Unit by the Operating Company or its contractors, agents, representatives, sub-contractors and suppliers of any tier are deemed to be the absolute property of the Scottish Ministers.

The Operating Company shall take reasonable precautions to prevent its work, people or any other persons from removing or damaging any such article or thing. Immediately upon discovery thereof and before removal, the Operating Company shall notify the Scottish Ministers in writing of such discovery and shall execute the treatment or disposal of same subject to an Order.

19.6 Operations within Government or Local Authority Establishments

19.6.1 Where Operations are undertaken within the boundaries of a government or local authority establishment, the Operating Company shall comply with any procedures, rules and regulations of such establishment.

19.7 Data Protection Act – Operating Company's Indemnity

19.7.1 Any terms used in this Clause 19.7 which are defined in the *Data Protection Act 1998* shall bear the same meanings in this Clause. To the extent that any data or information belonging to either Party ("Data Owner**"**) is personal data within the meaning of the *Data Protection Act 1998* the other Party ("Data Recipient**"**) shall:

(i) process the personal data only to the extent, and in such a manner, as is necessary for the purposes of performing its obligations under this Contract and only in accordance with the instructions from the Data Owner; and

(ii) process the personal data only to the extent, and in such a manner, as is necessary for the purposes of performing its obligations under this Contract and only in accordance with the instructions from the Data Owner; and

(iii) not transmit such data and information to a country or territory outside the European Economic Area without the Data Owner's prior express written consent; and

(iv) take appropriate technical and organisational measures against the unauthorised or unlawful processing of the personal data and against the accidental loss or destruction of, or damage to, the personal data to ensure the other party's compliance with the seventh principle of Schedule 1 of the *Data Protection Act 1998*.

19.7.2 To the extent that the Scottish Ministers are the Data Owner and the Operating Company is Data Recipient, the Operating Company shall send copies of any subject access requests which it receives to such party as may be previously advised by the Scottish Ministers to the Operating Company immediately or as soon as reasonably practicable thereafter upon receipt of such requests.

19.7.3 Where the Operating Company (or its contractors, agents, representatives, suppliers and sub-contractors of any tier) have obtained, without the consent of the Scottish Ministers, personal data within the meaning of the *Data Protection Act 1998* and where it (or they) have directly or indirectly breached the Act, the Operating Company shall fully indemnify the Scottish Ministers against all resulting losses and claims.

19.8 Non Corrupt Practices

19.8.1 The Operating Company warrants that it has not and shall not:

(i) offer give or agree to the giving of any gift or consideration of any kind to any person or entity as an inducement or reward for doing or forbearing to do or for having done or forborne to do any act in relation to the obtaining or execution of this Contract by the Operating Company or any other contract with the Scottish Ministers or for showing or forbearing to show favour or disfavour of any person or entity in relation to this Contract or any other contract between the Scottish Ministers and the Operating Company, or

(ii) enter into this Contract or any other contract with the Scottish Ministers in connection with which commission has been paid or agreed to be paid by the Operating Company or on its behalf or to its knowledge to any person or entity unless before the contract is made particulars of any such commission and of the terms and conditions of any agreement for the payment thereof have been disclosed in writing to the Scottish Ministers or

(iii) commit any breach of the *Employment Relations Act 1999 (Blacklists) Regulations 2010* or Section 137 of the *Trade Union and Labour Relations (Consolidation) Act 1992* or commit any breach of the *Data Protection Act 1998* by unlawfully processing personal data in connection with any blacklisting activities.

19.8.2 Any breach of the prohibitions referred to in this Clause 19.8 or the commission of any offence under the Bribery *Act 2010* or any similar or related legislation in respect of fraudulent acts by the Operating Company in relation to this Contract or any other contract with the Scottish Ministers shall entitle the Scottish Ministers to terminate this Contract in accordance with Clause 16.

Thereupon the provisions of Clause 16 shall have effect as if such breach or offence was expressed as a reason for termination by the other provisions of this Contract. The termination shall be as if made under Clause 16.1.2 and the subsequent procedures and entitlements shall be the same as that for termination under Clause 16.1.2.

In addition to the costs and expenses recoverable by the Scottish Ministers as provided for in the other provisions of this Contract, the Scottish Ministers shall also be entitled to recover from the Operating Company any other costs or losses incurred by the Scottish Ministers consequent upon such termination under Clause 19.8.

In the event that the Operating Company breaches the prohibitions referred to in this Clause 19.8 or commits an offence under the *Bribery Act 2010* in relation to this Contract or any other contract with the Scottish Ministers, the Operating Company shall not be entitled to payments on this Contract or contracts beyond this Contract (if any) which may be provided for by the other provisions of this Contract.

19.8.3 In every sub-contract for any part of the Operations the Operating Company shall incorporate provisions that:

(i) impose on the sub-contractor liabilities substantially similar to those imposed on the Operating Company by Clauses 19.8.1 and 19.8.2, and

(ii) entitle the Operating Company to determine the sub-contract on terms equivalent to those contained in the other provisions of this Contract.

19.8.4 The Operating Company will be held liable for the actions or lack of action of any sub-contractor of any tier should a sub-contractor breach the requirements of this Clause 19.8.

19.8.5 In the event of any breach by any sub-contractor of any tier of any of the liabilities referred to in Clause 19.8.3, the Operating Company shall without prejudice to any of its obligations under this Contract take action in accordance with the terms of the sub-contract to exercise its rights against the sub-contractor.

Failure by the Operating Company to take action shall be a reason for termination of this Contract by the Scottish Ministers in accordance with Clause 16.

When the Operating Company exercises its rights against a sub-contractor in accordance with this Clause 19.8, it shall make no claim nor agree to any claim

being made on its behalf against the Scottish Ministers for any consequential delays and extra costs arising from the terms of this Contract.

19.8.6 Any Dispute as to the amount recoverable by the Scottish Ministers from the Operating Company under this Clause 19.8 shall be settled in the manner provided by Clause 18.

19.9 Privacy of Information

19.9.1 The Operating Company shall only give information concerning this Contract for publication in accordance with the provisions of this Contract as stated in Schedule 3 Part 5.

19.10 Secrecy

19.10.1 Notwithstanding any other provisions of this Contract, the provisions of the *Official Secrets Acts 1911 to 1989* shall apply to this Contract and to the Operating Company.

The Operating Company shall ensure that all persons employed by it in connection with this Contract are aware that these statutory provisions apply to them during the continuance and after the completion or earlier termination of this Contract.

19.10.2 Information concerning this Contract and any information obtained either by:

(i) the Operating Company in the course of the execution of this Contract, or

(ii) by any person employed by the Operating Company in connection with this Contract in the course of such employment,

shall be confidential and shall be used by the Operating Company and by any such person solely for the purpose of this Contract.

Subject to the provisions of Clause 19.10, such information shall not at any time be disclosed to any third parties by the Operating Company or by any such person without the prior written consent of the Scottish Ministers.

19.11 Intellectual Property Rights and Ownership of the Information

19.11.1 The “Foreground Intellectual Property Rights” means the rights in and ownership of all Intellectual Property Rights, data, Designs, Drawings, inventions, ideas, photographs, reports, software, specifications, websites, domain names, databases and all data pertaining to the operation of such websites, domain names and databases and other materials or work, Operations or activities, of whatsoever nature, both existing and occurring during this Contract:

(i) conceived,

(ii) developed,

(iii) made, or

(iv) otherwise produced,

by the Operating Company (or its contractors, agents, representatives, suppliers and sub-contractors of any tier) or given to the Operating Company by anyone or brought to the attention of the Operating Company (or its contractors, agents,

representatives, suppliers and sub-contractors of any tier) by anyone (whether in electronic form, on paper or in any other form) in the course of or arising from the execution of the Operations.

The Foreground Intellectual Property Rights (save for any third party rights in such Foreground Intellectual Property Rights which are demonstrably incapable of transfer)are hereby assigned to and vest in and are the property of the Scottish Ministers.

The Operating Company hereby grants to the Scottish Ministers and any transferee or sub licensee of the Scottish Ministers, on a non-exclusive, royalty free, perpetual, and irrevocable licence, on a worldwide and unrestricted use basis, all such rights to the Operating Company's own Intellectual Property Rights forming part of the Foreground Intellectual Property Rights as are required for the Scottish Ministers to use the Foreground Intellectual Property Rights in the future, including following upon expiry or termination of this Contract.

19.11.2 By entering into this Contract, the Operating Company shall (and shall procure that all of its contractors, agents, representatives, suppliers and sub-contractors of any tier) assign, make over and transfer all right, title, and interest, present and future, to the Foreground Intellectual Property Rights to the Scottish Ministers.

The Operating Company shall execute or procure the execution of any deed or document and do all other things necessary to ensure that all such right, title, and present and future interest in and to the Foreground Intellectual Property Rights vest in the Scottish Ministers.

19.11.3 The Operating Company shall assist the Scottish Ministers in connection with any application to record or register any Intellectual Property Rights in respect of this Contract and shall do all such acts and things as the Scottish Ministers shall require in writing in connection with any such assistance.

19.11.4 The Operating Company irrevocably appoints the Scottish Ministers to be its agent and in its name and on its behalf to do all such acts and things and to sign all such deeds and documents as may be necessary in order to provide to the Scottish Ministers the full benefit of the provisions of this Clause 19.11.

19.11.5 The Operating Company hereby confirms that it shall procure that any third parties it may appoint as contractors, agents, representatives, suppliers or sub-contractors, shall adhere to the provisions of this Clause 19.11.5 and shall appoint the Scottish Ministers to act as agent on behalf of such third parties in accordance with the provisions of this Clause 19.11. For the purposes of this Clause 19.11.5, a Certificate signed by the Director shall be conclusive evidence that:

(i) any act or thing done by the Scottish Ministers, or

(ii) any deed or document executed by the Scottish Ministers,

falls within the authority of the Scottish Ministers to act as agent in accordance with the provisions of this Clause 19.11.

The Operating Company warrants and undertakes (and shall procure that all of its contractors, agents, representatives, suppliers and sub-contractors warrant and undertake) that it shall:

(i) be free to assign all right, title and interest, present and future in and to the Foreground Intellectual Property Rights to the Scottish Ministers in accordance with this Clause 19.11 without any third party claims, liens, charges or encumbrances of any kind, and

(ii) be free of any duties or obligations to third parties that may conflict with the terms of this Clause 19.11.

19.11.6 The Operating Company hereby warrants that the Foreground Intellectual Property Rights (whether created by the Operating Company and or its contractors, agents, representatives, suppliers and sub-contractors) do not and shall not infringe any intellectual property rights of which a third party is the proprietor.

19.11.7 Notwithstanding any other provision of this Contract, and without prejudice to the application of the *Official Secrets Acts 1911 to 1989,* the Operating Company shall keep and shall ensure that its contractors, agents, employees, representatives, suppliers and sub-contractors of any tier keep the information in respect of this Contract secret and confidential and shall:

(i) not at any time for any reason whatsoever disclose information in respect of this Contract to any third party,

(ii) use information in respect of this Contract, or

(iii) permit information in respect of this Contract to be so disclosed or used,

except as shall be permitted by the other provisions of this Contract to enable the proper provision of the Operations by the Operating Company.

19.11.8 Notwithstanding any other provisions of this Contract, the Operating Company shall indemnify and keep indemnified the Scottish Ministers and any employee or representative of the Scottish Ministers against all actions, charges, claims, costs, demands, expenses, losses, and suits incurred by or brought against the Scottish Ministers, or any employee or representative of the Scottish Ministers, arising from or in connection with, or incurred by reason of, any breach of this Clause 19.11 by the Operating Company and any infringement or alleged infringement of any third parties' intellectual property rights by reason of the use or possession of the Foreground Intellectual Property Rights, or any part thereof, by the Scottish Ministers, or any employee or representative of the Scottish Ministers, including without prejudice to the generality of the foregoing:

(i) any legal expenses incurred by the Scottish Ministers or any member, employee or representative of the Scottish Ministers,

(ii) any sums paid to any third party by way of damages or in settlement of any claim by a third party in respect of any such infringement or alleged infringement, and

(iii) the actual cost of any such substitute or replacement for any item that the Scottish Ministers are unable to use in consequence of any such infringement or alleged infringement.

19.11.9 The Scottish Ministers shall permit the Operating Company to use the Intellectual Property Rights in respect of this Contract but only for the purposes of and to the extent necessary for the proper provision of the Operations in accordance with this Contract and for no other purpose whatsoever, unless the Scottish Ministers shall have given consent in writing to the Operating Company that permits the use of such for another purpose. The Scottish Ministers do not accept any liability whatsoever in respect of any infringement or alleged infringement of any third parties' intellectual property rights by reason of the use or possession of the Intellectual Property Rights in respect of this Contract, or any part thereof, by the Operating Company or its contractors, agents, representatives, suppliers and sub-contractors of any tier.

19.11.10 With the exception of the rights under Clause 19.11.9, which by their nature shall expire at the earlier of the end of the Contract Period or termination of this Contract, the rights and obligations of the Parties under this Clause 19.11 shall survive the expiry or the termination of this Contract howsoever arising.

19.12 Freedom of Information

19.12.1 The Scottish Ministers may need to disclose or publish all information submitted to them in respect of the proposed execution or actual execution of the Operations.

Without prejudice to the foregoing generality, the Scottish Ministers may disclose information in compliance with the *Freedom of Information (Scotland) Act 2002*, the *Environmental Information Regulations (Scotland) 2004* the *INSPIRE (Scotland) Regulations 2009* and judicial orders and any similar or related Legislation and any similar and or related legislation that may exist in other jurisdictions ("Information Acts"). The decisions of the Scottish Ministers regarding the disclosure, or otherwise, of information shall be final and conclusive under the terms of the Information Acts.

Additionally, the Scottish Ministers may also disclose all information submitted to them in accordance with this Contract to the Scottish and United Kingdom parliaments and to any other department, office or agency of Her Majesty's governments in Scotland and the United Kingdom and their servants and agents. The Operating Company acknowledges that, when making such disclosures, the Scottish Ministers are unable to impose any restriction upon the information that they provide and that such disclosure shall be deemed not to be a breach of this Contract.

19.12.2 Any information regarding the Intellectual Property Rights of each of the Parties shall be deemed commercially sensitive information for the purposes of the Information Acts (to the extent that such information is not available to the general public).

19.12.3 The Operating Company shall (and shall procure that all of its contractors, agents, representatives, suppliers and sub-contractors of any tier) assist the Scottish Ministers in managing requests for information in relation to this Contract that are made to the Scottish Ministers or to the Operating Company in

accordance with the procedures set out in paragraph 2.5 of Schedule 3 Part 5, only where the request is made in connection with the Information Acts. The Scottish Ministers may in addition to the requirements set out in Schedule 3 Part 5, from time to time, serve on the Operating Company an information notice requiring the Operating Company within such time and in such form as is specified in the information notice, to furnish to the Scottish Ministers such information as the Scottish Ministers may reasonably require relating to such requests for information. The Operating Company acknowledges that in responding to such requests for information, the Scottish Ministers shall be entitled to provide information relating to this Contract in accordance with this Clause 19.12 and the Information Acts.

20. CLAUSE 20: THE CONSTRUCTION (DESIGN AND MANAGEMENT) REGULATIONS

20.1 The Construction (Design and Management) Regulations

20.1.1 For the purpose of this Clause 20 the terms "client", "CDM coordinator", "construction phase plan", "designer" and "principal contractor" shall have the meanings assigned to them in the CDM Regulations.

20.1.2 The Operating Company shall employ a person, approved by the Scottish Ministers, to act as a single point of contact for the client in respect of the CDM Regulations, who shall be known as the Client’s Representative. Such person shall have the qualifications and experience, shall perform the role, and shall be appointed in accordance with the requirements all as set out in this Schedule 1 and Schedule 6 Part 2.

20.1.3 A member of the Core Management Team will be nominated as Client’s Representative who shall act independently of the Operating Company's commercial management of this Contract. The Operating Company shall respect the need for independence and ensure that the Client's Representative can act independently.

The Client's Representative may not be changed without prior agreement of the Scottish Ministers. Such agreement shall be sought by the Operating Company not less than 28 days prior to the proposed date of the change.

20.1.4 If subsequent to the appointment of the Client's Representative the Scottish Ministers are dissatisfied with the work of the Client's Representative, the Operating Company shall procure a replacement who has the qualifications and experience and who can perform the role all as set out in this Contract as consented to by the Scottish Ministers within 28 days of the Scottish Ministers notification. If the Operating Company fails to procure a replacement, the Scottish Ministers may make their own appointment and the costs of such appointment will be deducted from amounts payable to the Operating Company under Clause 10.

20.1.5 The Operating Company shall notify the Scottish Ministers in writing of the appointment of designer(s) and CDM Coordinator(s) and any changes proposed to be made prior to the Service End Date in accordance with the requirements of Schedule 5 Part 4.

20.1.6 Where the CDM Regulations apply to any part of the Operations or any Schemes or Works undertaken by a Works Contractor, and where the Operating Company is appointed by the Scottish Ministers to act in the role of CDM Coordinator for any part of the Operations and or Schemes and or Works Contracts, such appointment is deemed to be accepted by the Operating Company by the signing of this Contract.

20.1.7 When taking any actions in any role for which it is responsible under the CDM Regulations, the Operating Company shall maintain a written Record that such actions are being taken in accordance with the provisions of the CDM Regulations and the role under which the actions are taken.

20.1.8 Any action required by any principal contractor or any CDM Coordinator, which necessitates any amendment to any construction phase plan, and or any such alteration and or amendment shall not entitle the Operating Company to any additional payment or extension of time for alteration and or amendment.

SCHEDULE 1

PART 9 – TAX MATTERS INCLUDING VALUE ADDED TAX

21. CLAUSE 21: TAX PROVISIONS

21.1 Tax Matters

21.1.1 The rates and prices contained in the Schedule of Rates and Prices are deemed to take account of the levels and incidence 42 days prior to the date for the return of the Final Tender Submission of:

(i) the taxes, levies, contributions, premiums, or refunds, that shall be by law payable by or to the Operating Company in respect of their Contract Personnel,

(ii) any landfill tax payable by the Operating Company pursuant to the *Finance Act 1996* and *Landfill Tax Regulations* thereof for the time being in force, and

(iii) any aggregates levy payable by the Operating Company, its sub-contractors or suppliers of any tier pursuant to Legislation.

The rates and prices contained in the Schedule of Rates and Prices shall not take account or be deemed to take account of any level or incidence of the matters, referred to in paragraphs (i), (ii) and (iii) above, foreseeable or known to take effect at some later date.

21.1.2 If after the date 42 days prior to the date for return of the Final Tender Submission there shall occur any change in the level or incidence of any such taxes, levies, contributions, premiums, or refunds, (including such landfill tax or aggregates levy) (but excluding income tax and any levy payable under the *Industrial Training Act 1982* thereof for the time being in force) the Operating Company shall so notify in writing the Scottish Ministers.

Notwithstanding any other provisions of this Contract the Operating Company shall provide all the information that in the opinion of the Scottish Ministers is necessary to demonstrate any proposed adjustment to the Contract Price resulting from any such change. Such information shall include, but should not be limited to, proof of payments actually made before and after the change for which the Operating Company seeks additional reimbursement.

All payments to the Operating Company by the Scottish Ministers after the provision of such information shall take account of the net amount of such additions or deductions to which such information relates.

21.1.3 Clause 21.1.2 shall only apply to a matter whose effect on prices is not to be included in the calculation of any of the indices referred to in Clause 10.7.

21.2 Value Added Tax

21.2.1 The Operating Company is deemed not to have allowed in the Schedule of Rates and Prices for any Value Added Tax that may be chargeable on any taxable supplies made to the Scottish Ministers made under this Contract.

21.2.2 The Operating Company shall not include in any Statement submitted under Clause 10 any element on account of Value Added Tax in any item or claim contained in or submitted with any such Statement.

21.2.3 Without prejudice to the provisions of Clause 21.2.4, the Operating Company shall concurrently with the submission of every Statement referred to in Clause 21.2.2 provide to the Scottish Ministers a written assessment showing those supplies of goods and services and the values thereof included in each said Statement and on which Value Added Tax is properly chargeable on the supply to the Scottish Ministers of any goods or services by the Operating Company under this Contract at a rate other than zero.

21.2.4 In addition to the payments due to the Operating Company by the Scottish Ministers pursuant to the other provisions of this Contract, the Scottish Ministers shall separately identify and pay to the Operating Company any Value Added Tax properly chargeable by the Operating Company on the supply to the Scottish Ministers of any goods or services by the Operating Company under this Contract in exchange for the issue of a valid Value Added tax invoice by the Operating Company to the Scottish Ministers.

21.2.5 If any dispute arises between either the Scottish Ministers or the Operating Company and Her Majesty's Revenue and Customs in connection with any Value Added Tax chargeable or alleged to be chargeable in connection with this Contract, including but not limited to the execution of the Operations, the Scottish Ministers and the Operating Company shall provide each other with any support and assistance as may be necessary to resolve such dispute.

21.2.6 Clause 18 does not apply to any disputes arising under Clauses 21.2.1 to 21.2.3.

21.3 Construction Industry Scheme

21.3.1 The Operating Company is deemed a Construction Industry Scheme contractor and shall be required to register accordingly with Her Majesty's Revenue and Customs.

21.3.2 In accordance with the requirements of the Construction Industry Scheme, the Operating Company shall verify the tax status of all sub-contractors it uses each month to ensure the correct payment treatment is applied along with confirming that the employment status of each subcontractor engaged by it during the Contract Period has been fully considered and that where applicable each subcontractor is genuinely self employed.

21.3.3 The Operating Company shall keep Records of the gross amount of:

(i) each payment it makes to a subcontractor, excluding any Value Added Tax applicable,

(ii) the amount of any deduction it makes from a payment before it is paid to the subcontractor, and

(iii) if a deduction was made, the amount of the actual costs incurred by the subcontractor on any materials, consumable stores, fuel (except fuel incurred in relation to travelling as set out at Clause 21.3.5 below), certain plant hire and the manufacture or prefabrication of materials (and any other amount excluded from the amount of the contract payment from which the contractor is required to make a deduction under section 61(1) of the *Finance Act 2004*), excluding any Value Added Tax where applicable.

21.3.4 If the subcontractor does not provide the Operating Company with details of any costs referred to in Clause 21.3.3 (iii), the Operating Company shall be required to make a reasonable estimate of such costs.

21.3.5 Any travel expenses (including fuel costs) and subsistence paid to the subcontractor by the Operating Company must be included in the gross amount of the contract payment from which the Operating Company is required to make a deduction.

21.3.6 The Operating Company shall keep such Records referred to in Clause 21.3.3 for at least six years after the end of the tax year to which they relate. If requested by the Scottish Ministers during the period stated in this Clause, the Operating Company shall make such Records available to the Scottish Ministers.

21.3.7 All terms in this Clause 21.3 not otherwise defined in this Contract shall be interpreted in accordance with the Construction Industry Scheme.

SCHEDULE 1

PART 10 – TUPE REGULATIONS AND EMPLOYEES AND PENSION MATTERS

22. CLAUSE 22: TRANSFER OF UNDERTAKINGS

22.1 Transfer of Undertakings

22.1.1 The Parties acknowledge that the Transferring Employees will transfer to the employment of the Operating Company on Commencement of Service Date 1.

22.1.2 The contracts of employment of the Transferring Employees shall have effect from Commencement of Service Date 1 as if originally made between those employees and the Operating Company except in so far as pension provisions post transfer are set out in this Contract.

22.1.3 Prior to and after Commencement of Service Date 1 the Parties will comply with their respective obligations under the TUPE Regulations. The Operating Company warrants that it will comply with its obligations under the TUPE Regulations on total or partial cessation of Operations and it will procure that any contractor or subcontractor of any tier will comply with those obligations.

22.1.4 The Scottish Ministers will supply the Operating Company with the TUPE Commencement Information.

22.1.5 In advance of supplying the TUPE Commencement Information, Scottish Ministers will supply Provisional TUPE Information to the Operating Company at regular intervals.

22.1.6 The Operating Company has satisfied itself that the Scottish Ministers and FETA have complied with the requirements of Regulation 11 of the TUPE Regulations and agrees that it will not make a claim under Regulation 12 against FETA or the Scottish Ministers in any court or tribunal seeking compensation for any alleged breach of Regulation 11.

22.1.7 The Operating Company shall within 10 Working Days of a request from the Scottish Ministers provide to the Scottish Ministers written details of any measures which it envisages it shall take in relation to the Transferring Employees and if there are no measures confirmation of that fact.

22.1.8 The Operating Company shall ensure a smooth transition for the Transferring Employees by developing an integrated HR team with the Scottish Ministers and FETA to facilitate communication of information.

22.1.9 The Scottish Ministers will be responsible for all remuneration, benefits, entitlements and outgoings in respect of the Transferring Employees, such including as a minimum, all wages, holiday pay, bonuses, commissions, payments of PAYE, National Insurance contributions, pension contributions up to Commencement of Service Date 1.

22.1.10 Subject to Clause 22.1.11 the Scottish Ministers will indemnify and keep indemnified the Operating Company against any losses, except indirect losses, incurred by the Operating Company or any relevant sub-contractor in connection with any claim or demand by any Transferring Employee arising out of the employment of any Transferring Employee. This indemnity shall apply provided that it arises from any act, fault or omission of the Scottish Ministers or FETA in relation to any Transferring

Employee prior to Commencement of Service Date 1 (except where such act, fault or omission arises as a result of the Operating Company's failure to comply with regulation 13 of the TUPE Regulations) and any such claim is not in connection with the transfer of the Operations by virtue of the TUPE Regulations on Commencement of Service Date 1.

22.1.11 The Operating Company shall be liable for and indemnify and keep indemnified the Scottish Ministers against any losses, except indirect losses, arising from or as a consequence of:

(i) any proposed changes to terms and conditions of employment of the Transferring Employees the Operating Company may consider making on or after Commencement of Service Date 1,

(ii) any of the employees informing the Scottish Ministers or FETA that they object to being employed by the Operating Company; and, or

(iii) any change in identity of the Transferring Employees' employer as a result of the operation of the TUPE Regulations and or as a result of any proposed measures the Operating Company may consider taking on or after the Commencement of Service Date 1.

22.1.12 The Scottish Ministers shall indemnify and keep indemnified the Operating Company against any losses, except indirect losses, incurred by the Operating Company in connection with any claim or demand by any person who is not a Transferring Employee who claims that their employment transferred or ought to have transferred to the Operating Company by operation of the TUPE Regulations, provided that the Operating Company notifies the Scottish Ministers in writing within 28 days of becoming aware of such a claim.

22.1.13 The Operating Company undertakes not to transfer any of the Transferring Employees to a sub-contractor or Associated Company and undertakes that the Transferring Employees will be employed by Amey Services Limited for the Contract Period.

22.1.14 The Operating Company shall recognise the trade unions representing the Transferring Employees to the same extent that they were recognised by FETA prior to the transfer of those staff to the Operating Company.

22.1.15 The Scottish Ministers shall not be liable for any failure of the Operating Company or any contractor or sub-contractor (of any tier) to fulfil its obligations under the TUPE Regulations.

From Commencement of Service Date 1 the Operating Company will pay, provide and settle in full all remuneration and benefits of any kind which are due to the Contract Personnel. These will be paid or provided no later than the date such remuneration and or benefits are due, or if such remuneration and or benefits are due after the Service End Date, the Operating Company shall make a payment to the Scottish Ministers equivalent to such remuneration and or benefits on the Service End Date.

22.1.16 At any time during the existence of this Contract or after its expiry or termination, the Operating Company shall provide to the Scottish Ministers in writing such Contract Personnel Information as the Scottish Ministers may require.

Such information shall be provided within four weeks of receipt of any request, or such other reasonable period as agreed by the Scottish Ministers, and in such formats as may be specified by the Scottish Ministers.

22.1.17 The Operating Company shall supply the TUPE Information described in Table 22.1.17/A, whether requested or not to the Scottish Ministers in writing (or in such format as may be specified by the Scottish Ministers), at least 24 months before the Service End Date. The TUPE Information is only to include details relating to those Contract Personnel who are employees of the Operating Company (and or any contractor or subcontractor of any tier) and will be organised by reference to the particular employer.

Table 22.1.17/A – TUPE Information Required

Required Information
Date of Birth
Gender
Employer
Job/post title
Department
Location of each employee post
Basic Hours per week
Which of the various standard terms and conditions of employment is applicable (by reference to the one complete copy of the standard terms and conditions of employment which is to be provided for each employee or for each particular category of employee)
Annual Salary or wage, including additional benefits and earnings including overtime, bonuses, standby, call out, ad hoc allowance, shift allowance, 13 week average wage, share schemes, buy/sell leave, BUPA Dental, BUPA Medical and confirmation that bonus payments are contractual
Overtime rates and conditions
Accommodation and travel allowances paid as part of employment package (excludes information on reimbursement of “as incurred expenses”)
Frequency of salary or wage payments, and pay date
Leave entitlement – annual and public holiday
Contract type – permanent or temporary, and whether full time or part time.
Company Car/Vehicle scheme details – Car/Van/Allowance, if allowance how much, is vehicle taken home, car model, if fuel provided, mileage rate
Details of any other ad hoc allowances i.e. first aid, fire warden, flexitime etc
Date of commencement of last period of service
Period of notice for each employee to terminate employment
Pension scheme terms and conditions, including sufficient information to enable

Required Information
the potential liabilities of potential transferees to be understood in respect of the rights that do transfer
Employee pension details – in standard scheme or entitled to it, employee contribution, employer contribution, fully funded, list impact on pension membership of any enhanced remuneration and benefits which transfer under TUPE
Whether an active member of a Local Government Pension Scheme
Details of Life Assurance e.g. 2 x Salary
Training records and qualifications
Future training cost commitments
Long term sick leave records
Details of sick pay entitlement
Trade Union Recognition
Disciplinary records
Details of any entitlement to enhanced rights on being made redundant (whether it is an entitlement to a cash payment or a pension benefit)
Details of the percentage of the total time employed that each employee is engaged in performance of the Operations
Details of the percentage of total time employed that each employee is engaged in performance of the Operations in the last 6 months
Continuous service date
Copies of rules of any pension scheme which any employee is a member of
Maternity leave, paternity leave and parental leave records
Pay Grade, Pay Review Details, and Pay Agreements
Details of any court or tribunal case, claim or action (i) brought by an employee against the transferor within the past two years or (ii) that the transferor has reasonable grounds to believe that an employee may bring against the transferee, arising out of the employee's employment with the transferor
Details of which of the various collective agreements apply (by reference to the one complete copy which is to be provided of each and every collective agreement which will have affect after the transfer)
Details of any current, outstanding or anticipated grievances or disputes in the past two years

22.1.18 After the TUPE Information has been provided, the Operating Company shall notify the Scottish Ministers in writing of any change to any part of the TUPE Information (such information being the "Updated TUPE Information") and shall co-operate with any reasonable requests made by the Scottish Ministers or any prospective tenderer

or incoming operating company concerning the TUPE Information and or the Updated TUPE Information all within 14 days of a change or receipt of a request, whichever is the earlier.

22.1.19 The Operating Company warrants that the TUPE Information, the Updated TUPE Information and Contract Personnel Information, will be complete and accurate as at the date it is supplied to the Scottish Ministers.

22.1.20 The Operating Company irrevocably waives, and procures that its contractors, and sub-contractors of any tier, irrevocably waive, the right of confidentiality and any other right that it or they may have in respect of the TUPE Information, the Updated TUPE Information, or the Contract Personnel Information.

22.1.21 The Scottish Ministers may disclose any of the TUPE Information, Updated TUPE Information and Contract Personnel Information to any prospective tenderer and incoming operating company and will ensure that, prior to such disclosure, the prospective tenderer or the incoming operating company undertakes not to disclose (unless required by law to do so) such information to any other person other than a person who:

(i) is a servant, agent or legal adviser of the prospective tenderer or incoming operating company, and

(ii) has undertaken not to disclose that information unless required by law to do so.

If after the Service End Date:

(i) any contract of employment relating to an individual (a) who is not included in the TUPE Information provided under Clause 22.1.17 or otherwise, or (b) who is included in the TUPE Information provided under Clause 22.1.17 but who has been identified by the Operating Company as not being eligible to transfer as provided for by Clause 22.1.17, or (c) who has been included in the TUPE Information provided under Clause 22.1.17 or otherwise but has incorrectly been identified as being eligible to transfer by the Operating Company under Clause 22.1.17 (together the "Undisclosed Employees"), shall have effect as if originally made between the Scottish Ministers (or an incoming operating company) and the individual or any individual Undisclosed Employee claims that their contract has this effect, or

(ii) any collective agreement shall have effect as if originally made between the Scottish Ministers (and or an incoming operating company) and any party to the collective agreement or any party claims that a collective agreement has this effect (together the “Undisclosed Agreements"),

the Scottish Ministers (or an incoming operating company) may forthwith terminate the Undisclosed Agreements and or employment of the Undisclosed Employees.

22.1.22 The Operating Company shall indemnify and keep indemnified the Scottish Ministers or (if the Scottish Ministers so direct) any incoming operating company in respect of any claims, costs (including Scottish Ministers' costs), expenses, payments, damages, compensation awards and liabilities arising from:

(i) any claim by any person that the transfer of his employment to an incoming operating company (or any contractor or subcontractor of any tier) or Scottish Ministers involves or would involve a substantial change in working

conditions to his material detriment or a claim that it gives or would give him grounds to claim constructive dismissal or any objection to the transfer by a transferring employee,

(ii) the employment of the Contract Personnel and the Undisclosed Employees by the Operating Company (or any contractor or subcontractor of any tier),

(iii) the employment of the Undisclosed Employees, the termination of the employment of the Undisclosed Employees or the termination of the Undisclosed Agreements, in each case by the Scottish Ministers or an incoming operating company,

(iv) any act or omission by the Operating Company (or any contractor or subcontractor of any tier) in relation to the Contract Personnel,

(v) any claim (including any entitlement of any Contract Personnel or Undisclosed Employee consequent on such a claim) by any trade union or staff association or employee representative arising from or connected with any failure by the Operating Company (or any contractor or subcontractor of any tier) to comply with any legal obligation to such trade union or staff association or employee representative (whether under the TUPE Regulations or otherwise),

(vi) any failure by the Operating Company (and or any contractor or subcontractor of any tier) to comply with its obligations under Clause 22, and

(vii) any failure by the Operating Company or any contractor or subcontractor of any tier, to comply with its obligations under regulations 11 and 13 of the TUPE Regulations at any time.

22.1.23 The Operating Company shall indemnify the Scottish Ministers and be liable for any additional employment costs incurred by the Scottish Ministers and any successor organisation to the Operating Company resulting from inaccurate or incomplete information submitted by the Operating Company under this Clause 22. Employment costs referred to in this clause shall also include costs of terminating employment of individuals and costs resulting from the Scottish Ministers' and the successor's organisation's representation at employment tribunals.

22.1.24 The Operating Company shall be liable for any costs incurred by the Scottish Ministers and any successor organisation to the Operating Company due to the non-disclosure by the Operating Company of any collective agreements that are subject to TUPE Regulations.

22.1.25 Within the period of six months prior to the Service End Date, the Operating Company shall not (and shall procure that any contractor or sub-contractor of any tier shall not): (a) alter the terms and conditions of the Contract Personnel; (b) increase the number of total Contract Personnel assigned to the Operations; or (c) change the identity of the Contract Personnel unless such person is replaced with an individual of equivalent or greater level or skill and experience; without the consent of the Scottish Ministers. The requirements of this clause shall also apply following:

(i) the occurrence of any circumstance given in Clause 16.1 which enables the Scottish Ministers to terminate the contract, or

(ii) the issue of a notice of termination under Clause 16.1 of Schedule.

The requirements of this clause do not apply to changes arising in order to comply with nationally agreed settlements or Legislation.

22.1.26 Within 21 days of service of any notice of termination under Clause 16.1 the Operating Company shall provide the Scottish Ministers with the Contract Personnel Information and the TUPE Information. The Operating Company shall identify those employees whose details are included in the TUPE Information but who are not eligible to transfer by operation of the TUPE Regulations to the Scottish Ministers or an incoming operating company.

22.1.27 The provisions of this Clause 22 shall survive the expiry or termination of this Contract howsoever arising.

22A CLAUSE 22A- PENSION MATTERS

22A.1 Operating Company to become an Admission Body

Where the Operating Company (or any relevant contractor or sub-contractor) employs any Pensionable Authority Employees from Commencement of Service Date 1 it shall offer those Pensionable Authority Employees membership of the LGPS, and the Operating Company shall procure that it (and or any relevant contractor or sub-contractor) shall become an Admission Body. The Operating Company shall before Commencement of Service Date 1 execute (and procure that any relevant contractor or sub-contractor executes) an Admission Agreement in accordance with the requirements set out in the Admission Agreement which will have effect from and including Commencement of Service Date 1. Where the Operating Company (and or any relevant contractor or sub-contractor) fails to execute an Admission Agreement before Commencement Service Date 1 or terminates the Admission Agreement while providing Operations during the Contract Period and while employing any Pensionable Authority Employees, the Scottish Ministers shall have a right of termination of this Contract in accordance with Clause 16.1.

22A.2 Liability for underfunding prior to Commencement of Service Date 1

22A.2.1 Where the Operating Company (and/or any relevant contractor or sub-contractor) becomes an Admission Body, the Parties agree that:

(i) the Operating Company (and or any relevant contractor or sub-contractor) shall not be responsible for any underfunding in the LGPS which relates to (and is calculated by reference to) service of any Pensionable Authority Employee prior to Commencement of Service Date 1 and which underfunding shall be the responsibility of the Scottish Ministers.

22A.3 Admission Agreement

The Scottish Ministers will before Commencement of Service Date 1 execute the Admission Agreement referred to in Clause 22A.1 and shall use reasonable endeavours to ensure that the Administering Authority executes the said Admission Agreement before Commencement of Service Date 1.

22A.4 Indemnity for a breach of the Admission Agreement

The Operating Company hereby indemnifies the Scottish Ministers and or any future operating company, contractor or sub-contractor and, in each case, their sub-contractors on demand from and against all losses suffered or incurred by the Scottish Ministers which arise from any breach by the Operating Company (or any relevant contractor or sub-contractor) of the terms of the Admission Agreement to the extent that such liability arises before, or as a result of, the termination (howsoever caused), suspension or expiry of this Contract.

22A.5 Indemnity or bond

The Scottish Ministers will provide an indemnity to the Administering Authority under the LGPS Regulations in terms of the Admission Agreement. If the Operating Company is subsequently notified in writing by the Scottish Ministers that the Operating Company and any contractor and or sub-contractor shall be required to provide an indemnity or bond in an approved form within the meaning of Schedule 2 Part 2 Paragraph 7 of the LGPS Regulations, the Operating Company shall provide (and shall ensure that any relevant contractor or sub-contractor shall provide such said indemnity or bond) as soon as reasonably practicable such said indemnity and or bond.

22A.6 Right of Set Off

The Scottish Ministers will have a right to set off against any payments due to the Operating Company under this Contract an amount equal to any overdue employer and employee contributions and other payments (and interest payable under the LGPS Regulations) due from the Operating Company (or from any relevant contractor and or sub-contractor (as applicable)) under the Admission Agreement.

22A.7 Liabilities of the Parties and Payments relating to Pensions

22A.7.1 The following provisions shall apply to liability and payments as between the Parties in relation to the provisions of this Clause 22A:

(i) The Operating Company shall pay to the Administering Authority as and when required by the Administering Authority any and all Pension Fund Payments specified by the Admission Agreement in accordance with this Contract or required under the LGPS Regulations, including as a minimum the Pension Contribution Amounts (and as a condition for the operation of Clause 22A.8),

(ii) All or part of such Pension Fund Payments shall be charged to the Scottish Ministers as part of the Statements submitted in accordance with Clause 10.3, with the exception of any Additional Pension Costs which shall be met in full by the Operating Company. The Operating Company shall provide within 20 Working Days of the end of each Annual Period an annual breakdown of the Pension Fund Payments that shall evidence to the Scottish Ministers' reasonable satisfaction that the Statements submitted in accordance with Clause 10.3 did not include any part of the Additional Pension Costs,

(iii) Immediately on a liability to contribute under a rates and adjustments certificate under Regulations 32 or 34 of the LGPS (Administration) Regulations arising on the Operating Company (and or any relevant

contractor or sub-contractor), the Operating Company shall notify the Scottish Ministers (and shall procure that any relevant contractor or sub-contractor shall notify the Scottish Ministers) in writing of the Actual Contribution Amount set out in that rates and adjustments certificate issued by the Administering Authority, and

(iv) Immediately on a liability to contribute under a rates and adjustments certificate under regulations 60 or 62 of the LGPS Regulations arising on the Operating Company (and or any relevant contractor or sub-contractor), the Operating Company shall notify the Scottish Ministers (and shall procure that any relevant contractor or sub-contractor shall notify the Scottish Ministers) in writing of the Actual Contribution Amount set out in that rates and adjustments certificate issued by the Administering Authority, and

22A.8 Debt arising as a result of cessation of participation in the LGPS

22A.8.1 Where an Admission Agreement is terminated or otherwise ceases to have effect and the Operating Company (and or any relevant contractor or sub-contractor) is required in terms of the Admission Agreement to pay an additional contribution to the LGPS pursuant to a rates and adjustments certificate issued under regulation 62 of the LGPS Regulations or otherwise (the "Exit Contribution"), the Operating Company shall (or shall procure that any contractor and or sub-contractor shall) pass the account or invoice in relation to the Exit Contribution to the Scottish Ministers within 20 Working days of receipt of such account or invoice issued by the Administering Authority. The Scottish Ministers will be responsible for paying an amount equal to the Exit Contribution, subject to Clause 22A.8.2, to the Administering Authority for immediate credit to the LGPS.

22A.8.2 The Operating Company (and or any relevant contractor or sub-contractor) shall be responsible for any part of any Exit Contribution arising on termination of the Admission Agreement which relates to any unpaid contributions due under the Admission Agreement up to the date of termination of the Admission Agreement and or any Additional Pension Costs liabilities under Clause 22A.7.1(ii).

22A.9 Liability for Costs

All costs incurred in connection with the Admission Agreement shall be borne by the Operating Company.

22A.10 Pension issues on Expiry or Termination

22A.10.1 The Operating Company shall (and shall procure that any relevant contractor or sub-contractor shall):

(i) maintain such Records, including as a minimum, documents and information as will be reasonably required in the opinion of the Scottish Ministers to manage the pension aspects of any onward transfer of any person engaged or employed by the Operating Company (or any relevant contractor or sub-contractor) in the provision of the Operations on the expiry or termination of this Contract (including as a minimum identification of the Pensionable Authority Employees),

(ii) provide to the Scottish Ministers such Records, documents and information mentioned in Clause 22A.10.1(i) which the Scottish Ministers may

reasonably request in advance of the expiry or termination of this Contract, and

(iii) fully co-operate with the reasonable requests of the Scottish Ministers relating to any administrative tasks necessary to deal with the pension aspects of any onward transfer of any person engaged or employed by the Operating Company (or any relevant contractor or sub-contractor) in the provision of the Operations on the expiry or termination of this Contract.

22A.11 Discretionary Benefits

22A.11.1 Where the Operating Company (or a relevant contractor or sub-contractor) is an Admission Body, the Operating Company shall (and or shall procure that any relevant contractor or sub-contractor shall) award benefits (where permitted) to the Pensionable Authority Employees under the LGPS (Compensation) Regulations and or the LGPS in circumstances where the Pensionable Authority Employees would have received such benefits had they still been employed by FETA.

22A.11.2 Where the award of benefits in Clause 22A.11.1 is not permitted under the LGPS (Compensation) Regulations and or the LGPS, the Operating Company shall (and/or shall procure that any relevant contractor or sub-contractor shall) award benefits to the Pensionable Authority Employees which are no less favourable than the benefits the Pensionable Authority Employees would have received under the LGPS (Compensation) Regulations and or the LGPS in circumstances where the Pensionable Authority Employees would have received such benefits had they still been employed by FETA.

22A.11.3 Where under Clause 22A.11.1 and Clause 22A.11.2 such benefits are of a discretionary nature, they shall be awarded on the basis of FETA's historic written policy in relation to such benefits at the time of the Commencement of Service Date 1 (which the Scottish Ministers shall provide upon request). Where the payment of such benefits is not, for whatever reason, possible, the Operating Company shall (and or shall procure that any relevant contractor or sub-contractor shall) compensate the Pensionable Authority Employees in a manner which is broadly comparable or equivalent in cash terms in the opinion of the UK Government Actuary's Department (GAD).

22A.12 New Employees Pension Scheme

The Operating Company shall procure that the New Employees are offered membership of a good quality employer pension scheme (subject always to such pension scheme being auto-enrolment compliant for the purposes of the *Pensions Act 2008*), being either:

(i) a contracted-out final salary based defined benefit scheme, or

(ii) a defined contribution scheme under which the employer must match employee contributions up to six percent (6%), or

(iii) a stakeholder pension scheme, under which the employer matches employee contributions up to six percent (6%).

All or part of such New Employee Pension Contributions shall be charged to the Scottish Ministers as part of the Statements submitted in accordance with Clause 10.3 up to a maximum of 6%. Any amounts in excess of 6% (the "Excess New Employee Contributions") shall be met in full by the Operating Company unless a

higher maximum contribution percentage is consented to by the Director. The Operating Company shall provide within 20 Working Days after the end of each Annual Period an annual breakdown of the New Employee Pension Contributions that shall evidence to the reasonable satisfaction of the Scottish Ministers that the Statements submitted and payments made in accordance with Clause 10.3 did not include any part of the Excess New Employee Contributions.

22A.13 Operating Company and contractors and sub contractors and Clause 22A

Where a contractor or sub contractor employs any Pensionable Authority Employees, the Operating Company shall procure that the contractor or sub contractor shall deal with the provision of pension benefits in accordance with this Clause 22A as though references in this Clause 22A to the Operating Company were references to the contractor and sub contractor and references to "Commencement of Service Date 1" were references to the date of the transfer to the contractor or sub contractor. The Operating Company shall indemnify and keep indemnified the Scottish Ministers against any breach by the Operating Company or contractor or sub contractor of this Clause 22A.

SCHEDULE 1

PART 11 – SPECIAL REQUIREMENTS OF RELEVANT ORGANISATIONS

23. CLAUSE 23: SPECIAL REQUIREMENTS OF RELEVANT ORGANISATIONS

23.1 Relevant Organisations

23.1.1 "Relevant Organisation" means any of the authorities, Undertakers and other organisations listed in Table 23.1.1/A and includes their successor organisations and any subsidiary or parent undertakings (within the meaning of Section 1162 of the *Companies Act 2006* save that for the purposes of subsection (2) of that Section an undertaking shall be treated as a member of another undertaking if any shares in that other undertaking are held by a person or that person's nominee by way of security or in connection with the taking of security granted by the undertaking) of such organisations.

Table 23.1.1/A – Relevant Organisations

BP plc (or their successors in their capacity as owners of the pipeline which runs down/across the Firth of Forth)
British Telecommunications Group plc
The Civil Aviation Authority
The Coal Authority
The Crown Estate Office
Forth Ports Ltd
Global Infrastructures Partners (or their successors in their capacity as owners of Edinburgh Airport)
Government establishments
The Health and Safety Executive
Historic Scotland
Marine Scotland
Maritime and Coastguard Agency
National Grid plc
Network Rail Infrastructure Limited
Scotia Gas Networks plc
Scottish and Southern Energy plc
Scottish Environment Protection Agency
Scottish Government Rural and Environment Directorate
Scottish Natural Heritage
Scottish Power Ltd
Scottish Water Limited

Vodaphone Group plc
Traffic Scotland
Virgin Media Ltd

23.2 Compliance with Relevant Organisation's Requirements

23.2.1 The Operating Company shall be responsible for making its own arrangements for undertaking Operations which involve or impinge upon the interests of any Relevant Organisation.

When making arrangements for, and when undertaking, such Operations the Operating Company shall comply with the Special Requirements of all applicable Relevant Organisations.

23.2.2 The Operating Company shall be responsible for making all necessary applications for track Possessions, canal stoppages and closures of public rights of way.

23.2.3 The Operating Company shall also comply with any reasonable requirements of the Relevant Organisation that are specific to any particular Order.

23.2.4 Compliance with the requirements referred to in Clause 23.2.3 shall not relieve the Operating Company of any of its other obligations and liabilities under this Contract.

Fulfilment of such other obligations and liabilities shall not relieve the Operating Company of its responsibility to comply with the Special Requirements of the Relevant Organisation.

23.2.5 Where there is a conflict between the Special Requirements of Relevant Organisations and the provisions or requirements of this Contract and or among the Special Requirements, the Operating Company shall notify the Director. The Director shall resolve such conflict. The Director shall confirm to the Operating Company in writing his decision as to any interpretation of the said Special Requirements or any resolution within or between such Special Requirements. Any such decision shall be binding on the Operating Company. Any consequential alteration to the Operations shall be subject to the written consent of the Scottish Ministers.

This is Annex 1 to Schedule 1 referred to in the foregoing Agreement between Scottish Ministers and Amey LG Limited.

SCHEDULE 1

SCHEDULE 1 ANNEX 1 – Adjudication Procedure

1. ADJUDICATION PROCEDURE

1.1.1 Where an Adjudicator has been named in this Contract, or agreed by the Scottish Ministers and the Operating Company prior to the issue of the Notice of Dispute, the Party issuing the Notice of Dispute shall at the same time send to the Adjudicator a copy of the Notice of Dispute and a request that the Adjudicator confirms within two days of the date of issue of the Notice of Dispute, that the Adjudicator is able and willing to act.

Where an Adjudicator has not been so named or agreed, the Party issuing the Notice of Dispute may include with the Notice of Dispute the names of one or more persons with their addresses who have agreed to act, any one of whom would be acceptable to the Party issuing the Notice of Dispute, for selection by the other Party. The other Party shall select and notify the Party issuing the Notice of Dispute and the selected Adjudicator within two days of the date of issue of the Notice of Dispute of the appointment of the Adjudicator.

If a request for confirmation is not received or a selection is not made, both as described above, or the Adjudicator does not accept or is unable to act, then either Party may request the President of the Institution of Civil Engineers to nominate an Adjudicator within five days of receipt of the request. The request shall be in writing, accompanied by a copy of the Notice of Dispute and the appropriate fee.

1.1.2 The Adjudicator shall have power to open up, review, and revise any:

(i) decision,

(ii) opinion,

(iii) instruction,

(iv) direction,

(v) notice (with the exception of statutory notices),

(vi) objection,

(vii) certificate, or

(viii) any other documentation relevant to the Dispute,

of any person given or made pursuant to this Contract relating in any way to the Dispute save as otherwise expressly provided within this Contract.

1.1.3 The Adjudicator shall have power to appoint suitably qualified and experienced independent professional advisors as he may reasonably require (and any necessary secretarial assistance as is necessary) to advise him on any issues and the Adjudicator shall have proper regard to such advice in reaching his decision.

1.1.4 Where after consideration of the written submissions of the Scottish Ministers and the Operating Company the Adjudicator shall be of the opinion that:

(i) such written submissions shall be insufficient for him to reach a decision, or

(ii) clarification of the precise question that is being addressed to him is required,

then he shall so notify in writing the Scottish Ministers and the Operating Company forthwith and in that event he shall be entitled to determine the further procedures which he considers necessary to enable him to resolve the Dispute.

The Adjudicator shall be required to reach a decision in writing in accordance with the timetable hereinafter provided.

In the event of the Adjudicator failing to reach a decision either the Scottish Ministers or the Operating Company may serve a fresh notice in terms of paragraph 1.1.1 of this Schedule 1, Annex 1 and request another Adjudicator to act in accordance with the provisions of this Schedule 1, Annex 1.

1.1.5 The Adjudicator shall have power:

(i) to hold a hearing or other such meeting to take oral evidence from the Scottish Ministers and the Operating Company,

(ii) to fix the date time and place of any meetings, hearings or inspections that he deems appropriate giving the Scottish Ministers and the Operating Company reasonable notice thereof and declaring that the Scottish Ministers and the Operating Company may appoint representatives to appear on their behalf at any hearing,

(iii) to examine any witness or conduct an inspection of any property or thing relevant to the Dispute in the absence of any other representative of the Scottish Ministers or the Operating Company or any other person,

(iv) to allow at his discretion refuse or limit the appearance of witnesses whether witnesses of fact or expert witnesses,

(v) to allow any witness who gives oral evidence at a hearing to be questioned by the Scottish Ministers and the Operating Company under the control of the Adjudicator. The Adjudicator may put questions at any stage of the examination of the witness and such witness shall be obliged to answer,

(vi) to allow at his discretion the evidence of any witness to be presented in written form either as a signed statement or by a duly sworn affidavit. Either the Scottish Ministers or the Operating Company may make representations that such a witness shall attend for oral examinations at a hearing, and

(vii) If the Adjudicator so orders and if the witness thereafter fails to attend the Adjudicator may place such weight on the evidence as he considers fit or exclude it altogether.

The Adjudicator shall:

(i) at any time permit either the Scottish Ministers or the Operating Company to amend any submission,

(ii) Continue with the reference to the adjudication in default of appearance or of any act by either the Scottish Ministers or the Operating Company in like manner as a Judge of the Court of Session may continue with proceedings

in that Court when either the Scottish Ministers or the Operating Company shall fail to comply with an order of that Court or requirement of rules of Court including power to strike out any claim defence counter claim or other submission and to make any decision consequent upon any such striking out in the event that either the Scottish Ministers or the Operating Company shall fail within the timescale specified in this procedure or in any order to do any act required by this procedure or to comply with any order of the Adjudicator,

(iii) order either the Scottish Ministers or the Operating Company to produce to the other and to the Adjudicator for inspection and to supply copies of any documents in that Party's possession custody or power which in the event of a Dispute the Adjudicator determines to be relevant. Subject to the rules of privilege and in the event of privilege being claimed the Adjudicator shall have power hereunder to decide this question.

The Adjudicator shall have power:

(i) to order either the Scottish Ministers or the Operating Company to answer interrogations on the application to the other Party,

(ii) to require the Scottish Ministers or the Operating Company to submit if required in advance of any meeting or hearing or inspection a list of questions that they require him to treat with special attention,

(iii) to order the inspection preservation storage or interim custody of any property or thing relevant to the Dispute under the control of either Scottish Ministers or the Operating Company,

(iv) to order samples to be taken observations to be made and experiments to be tried that may in the Adjudicator's discretion be necessary or expedient for the purpose of obtaining full information or evidence,

(v) to require the Scottish Ministers and the Operating Company to provide written statements of their respective cases in relation to particular issues to provide written answers and to provide reasons for any disagreement,

(vi) to award simple interest to the successful Party to the adjudication on any sums held to be due from one Party to the other from any date including any date prior to the date of reference to adjudication. The rate of interest shall be at the discretion of the Adjudicator,

(vii) to ensure that all meetings hearings or inspections shall be in private unless the Scottish Ministers and the Operating Company agree otherwise, and

(viii) to allow the Scottish Ministers and the Operating Company to appoint representatives to appear on their behalf subject to such proof of authority as the Adjudicator may require.

1.1.6 Notwithstanding any of the foregoing nothing in this procedure shall be taken as conferring power upon the Adjudicator to order:

(i) either the Scottish Ministers,

(ii) the Operating Company, or

(iii) a representative of either the Scottish Ministers or the Operating Company,

to give evidence (whether in person or by way of documentary or similar evidence) that could not be ordered if the proceedings were before the Court of Session.

1.1.7 The Adjudicator may correct his decision so as to remove a clerical error or a typographical error arising by accident or omission.

1.1.8 The Dispute shall be referred to the Adjudicator within seven days of the Notice of Dispute. The Adjudicator shall issue his decision in writing to both the Scottish Ministers and the Operating Company within 28 days of referral of the Dispute to him or such longer period after referral as shall be agreed by the Scottish Ministers and the Operating Company. The period of 28 days may be extended by up to 14 days with the consent of the Party that issued the Notice of Dispute.

The Adjudicator may make separate decisions on different issues at different times.

1.1.9 The Adjudicator's decision shall be binding until the Dispute shall be finally determined by agreement, by arbitration as provided in Clause 18.3 or by legal proceedings.

1.1.10 The Adjudicator shall act impartially and may take the initiative in ascertaining the facts and the law necessary to determine the Dispute.

1.1.11 The Adjudicator shall not be liable for anything done or omitted in the discharge or purported discharge of his functions as Adjudicator unless the act or omission is in bad faith and any employee or agent of the Adjudicator shall similarly not be liable.

1.1.12 The costs of and incidental to retaining the Adjudicator in terms of this procedure and the appointment of the Adjudicator shall be within his award and failing which shall be borne equally between the Scottish Ministers and the Operating Company.

1.1.13 Unless otherwise ordered by the Adjudicator or agreed between the Scottish Ministers and the Operating Company all notices required for the adjudication procedure shall be in writing.

All notices required by this procedure shall be issued in accordance with Clause 2.11 of Schedule 1 Part 1.

1.1.14 Unless the intended recipient shall prove otherwise:

(i) documents sent by first class post shall be deemed to have been received two Working Days after posting and,

(ii) hand delivered documents shall be deemed to have been received at the time of delivery to the address stated on their face.

References in the adjudication procedure to receipt of documents shall be construed accordingly.

1.1.15 Notices shall be effective from the time of receipt.

Periods of time measured with reference to the giving sending or serving of a document shall be measured with reference to the time that the document shall have been received.

1.1.16 Unless otherwise ordered by the Adjudicator or agreed in writing between the Scottish Ministers and the Operating Company all notices and other documents received on a day which is not a Working Day or after 17:00 hours on any Working Day shall be deemed to have been received on the following Working Day.

1.1.17 Unless otherwise agreed by both the Scottish Ministers and the Operating Company any meetings called by the Adjudicator at which both the Scottish Ministers and the Operating Company shall be in attendance shall be held in Scotland.

1.1.18 In relation to this Schedule 1, Annex 1 – Adjudication Procedure, where time periods include Christmas Day, Good Friday or a day which under the Banking and Financial Dealings Act 1971 is a bank holiday in Scotland that day shall be excluded. Saturdays and Sundays are included.

This is Annex 2 to Schedule 1 referred to in the foregoing Agreement between Scottish Ministers and Amey LG Limited.

SCHEDULE 1

SCHEDULE 1 ANNEX 2 – Form of Model Bond and Undertaking

BOND AND UNDERTAKING

by

To be inserted(registered number and registered office to be included)
(hereinafter referred to as the "Guarantor")

to

The Scottish Ministers

WHEREAS

[*Name of the Operating Company to be inserted including the registered number and registered office where applicable]* (hereinafter referred to as the "Operating Company") and the Scottish Ministers have entered into a contract dated [*to be inserted*] for the management and maintenance of the Scottish Trunk Road Network - Forth Bridges Unit (hereinafter referred to as "the Contract"),

NOW THEREFORE [*Name of Guarantor to be inserted]* AND THE SCOTTISH MINISTERS HAVE AGREED AS FOLLOWS:

1. Subject to Clause 4 hereof, we, [*Name of Guarantor to be inserted]* (hereinafter referred to as the "Guarantor") give you The Scottish Ministers our bond and undertaking and bind and oblige ourselves to pay to you, The Scottish Ministers, within 10 Working Days of your first demand in writing (a **"Demand"**) stating that the Contractor is in breach of its obligations under the Contract, the sum stated in such Demand provided that such Demand:

   (a) shall be delivered to us by hand, by post or by courier service, and

   (b) shall be accompanied by a statement by you or on your behalf that the Contractor is in breach of its obligations under the Contract.

2. We hereby agree that we shall fulfil our obligation under this Bond and Undertaking without proof or conditions save as expressly provided herein and that receipt by us of a Demand in accordance with the terms of this Bond and Undertaking shall be conclusive evidence of our liability to pay the sum stated in the Demand.

3. This Bond and Undertaking shall expire and the Guarantor's liability hereinafter shall be released and discharged absolutely, at the end of the Contract Period or settlement of the final account whichever is the later except in respect of any demand in writing made before such date.

4. The Guarantor's liability under this Bond and Undertaking shall not exceed in aggregate the sum of £2,000,000.

5. This Bond and Undertaking and the benefit thereof shall not be assigned by any of the parties hereto without the prior written consent of all the parties hereto.

6. This Bond and Undertaking shall be governed by and construed in accordance with the laws of Scotland and the parties hereto submit to the jurisdiction of the Scottish Courts:

IN WITNESS WHEREOF these presents consisting of this page 2 of 2 and the preceding page 1 of 2 are duly signed and witnessed:

Dated this day of

Signature ……... in the capacity of …….

Name ……... (print in BLOCK CAPITALS)

Witness signature …….

Witness name ……. (print in BLOCK CAPITALS)

Duly authorised to sign a Bond Guarantee or Undertaking for and on behalf of:

…….

Postal Address …….

…….

Telephone No: …… Facsimile No: ……

This is Annex 3 to Schedule 1 referred to in the foregoing Agreement between Scottish Ministers and Amey LG Limited.

SCHEDULE 1

SCHEDULE 1 ANNEX 3 – Lane Occupation Charges

The Lane Occupation Charges that will be applied by the Scottish Ministers pursuant to Clause 15.5.1 are as follows:

Trunk Road	Lane Occupation Charge (per calendar day or part thereof)
M90	£13,000.00
A90	£13,000.00
A823 (M) Pitreavie Spur	£6,500.00
Any other Trunk Road on the Unit	£1,300.00

Any payments due to the Scottish Ministers from the Operating Company for Lane Occupation Charges shall be deducted from the next payment or any subsequent payment due to the Operating Company pursuant to the provisions of this Contract or, at the option of the Scottish Ministers shall be recoverable on demand from the Operating Company as a debt due to the Scottish Ministers.

This is Annex 4 to Schedule 1 referred to in the foregoing Agreement between Scottish Ministers and Amey LG Limited.

SCHEDULE 1

SCHEDULE 1 ANNEX 4 – Contract Price Fluctuations

1. WORK CATEGORY ASSIGNMENT

1.1.1 Table 1.1.1/A shows the applicable Work Category for each type of work identified in Schedule 2. Contract Price Fluctuation is only applicable to items that have Work Categories assigned.

Table 1.1.1/A – Work Category Assignment to Work Series and Sections

Series in Schedule 2	**Section –** (Item Number)	**Item Description**	**Work Category**
(1)	*(2)*	*(3)*	*(4)*
Series 100		**Preliminaries**	
	01	Recovery Vehicles	WC/9
	02	Mobilisation	WC/1
	03	Mobilisation	WC/1
Series 200		**Site Clearance**	
	01	Site Clearance	WC/1
	02	Take up or down and set aside for re-use or remove to store	WC/1
	03	Take Up or Down and Remove to Licensed Facility	WC/1
Series 300		**Fencing**	
	01	Fencing, Gates and Stiles	WC/2
	02	Repairs to Existing Fencing – Renew Components	WC/2
Series 400		**Road Restraint Systems (Vehicle and Pedestrian)**	
	01	Safety Barriers and Transitions	WC/2
	02	Terminals	WC/2
	03	Reconstruction of Concrete Ramps at Terminal Sections	WC/2

Series in Schedule 2	**Section –** (Item Number)	**Item Description**	**Work Category**
(1)	*(2)*	*(3)*	*(4)*
	04	Connection to Existing Systems	WC/2
	05	Vehicle Parapets	WC/2
	06	Pedestrian Parapets and Pedestrian Guardrails	WC/2
	07	Remove from Store and Re-erect Safety Barriers, Vehicle Parapets, Pedestrian Parapets, Pedestrian Guardrails and Pedestrian Handrails.	WC/1
	08	Temporary Safety Barriers	WC/2
	09	Painting of Safety Barriers, Pedestrian Guardrails and Handrails	WC/2
Series 500		**Drainage and Service Ducts**	
	01	Drains and Service Ducts	WC/2
	02	Filter Drains	WC/2
	03	Filter Material Contiguous with Filter Drain	WC/2
	04	Connections	WC/2
	05	Chambers and Gullies	WC/2
	06	Headwalls and Outfall Work	WC/2
	07	Soft Spots and Other Voids	WC/1
	08	Renewal, Raising or Lowering of Covers and Gratings on Existing Chambers and Gullies	WC/1

Series in Schedule 2	**Section –** (Item Number)	**Item Description**	**Work Category**
(1)	*(2)*	*(3)*	*(4)*
	09	Excavation in Hard Material	WC/1
	10	Protection to Existing Sewer, Drain or Service Duct	WC/2
	11	Drain Surveys	WC/1
	12	Setting up Closed Circuit Television Equipment for Drain Survey	WC/1
	13	Drain Survey by Closed Circuit Television Camera	WC/1
Series 600		**Earthworks**	
	01	Excavation	WC/1
	02	Excavation in Hard Material	WC/1
	03	Deposition of Fill	WC/1
	04	Disposal of Material	WC/1
	05	Imported Fill	WC/2
	06	Compaction of Fill	WC/1
	07	Geotextiles	WC/2
	08	Soft Spots and Other Voids	WC/1
	09	Topsoiling and Storage of Topsoil	WC/2
	10	Lining of Watercourses	WC/2
	11	Trial Pits	WC/1
	12	Siding out of Carriageways, Footways and Paved Areas	WC/1
Series 700		**Pavements**	
	01	Sub-base	WC/2
	02	Pavement	WC/4
	03	Regulating Course	WC/4

Series in Schedule 2	**Section –** (Item Number)	**Item Description**	**Work Category**
(1)	*(2)*	*(3)*	*(4)*
	04	Surface Treatment	WC/6
	05	Milling	WC/2
	06	Reinstatement of Paved Areas	WC/5
	07	Thin Bonded Repairs	WC/2
	08	Overband Sealing	WC/2
	09	Full Depth Repairs and Joint Repairs to Existing Concrete Carriageway	WC/2
	10	Pavement Reinforcement	WC/2
	11	Grip Testing	WC/1
Series 1100		**Kerbs, Footways and Paved Areas**	
	01	Kerbs, Channels, Edgings, Combined Kerbs and Channels, Combined Drainage and Kerb Blocks and Linear Drainage Channel Systems	WC/2
	02	Additional Concrete for Kerbs, Channels, Edgings, Combined Kerbs and Channels, Combined Drainage and Kerb Blocks, and Linear Drainage Channel Systems	WC/2
	03	Footways and Paved Areas	WC/4
	04	Remove from Store and Relay Paving Flags and Blocks	WC/1
	05	Cold Milling (Planing)	WC/1
	06	Reinstatement of Footways and	WC/5

Series in Schedule 2	**Section –** (Item Number)	**Item Description**	**Work Category**
(1)	*(2)*	*(3)*	*(4)*
		Paved Areas	
	07	Patching of Footways	WC/5
Series 1200		**Traffic Signs and Road Markings**	
	01	Traffic Sign Faces	WC/2
	02	Traffic Sign Posts	WC/2
	03	Traffic Sign Bases	WC/2
	04	Sign Lighting Units	WC/2
	05	Sign Bracket Arms	WC/2
	06	Road Markings	WC/7
	07	Removal of Road Markings	WC/1
	08	Road Studs	WC/2
	09	Marker Posts	WC/2
	10	Passively Safe Chevrons	WC/2
	11	Node Markers	WC/2
	12	Numbering of Traffic Signs	WC/1
Series 1300		**Road Lighting Columns And Brackets, CCTV Masts And Cantilever Masts**	
	01	Road Lighting Columns and, Brackets, Wall Mountings, CCTV Masts and Cantilever Masts	WC/8
	02	Remove from Store and Re-erect Road Lighting Columns and Brackets, Wall Mountings, CCTV Masts and Cantilever Masts	WC/1
	03	Luminaires	WC/8

Series in Schedule 2	**Section –** (Item Number)	**Item Description**	**Work Category**
(1)	*(2)*	*(3)*	*(4)*
	04	Numbering of Existing Road Lighting Columns	WC/1
	05	Replacement of defective CMS	WC/8
Series 1400		**Electrical Work for Road Lighting and Traffic Signs**	
	01	Trench for Cable or Duct	WC/1
	02	Cable and Duct	WC/8
	03	Terminations and Renew Terminations	WC/8
	04	Feeder Pillars	WC/8
	05	Chambers	WC/2
	06	Disconnection of Cables	WC/1
	07	Equipotential Bonding	WC/8
	08	Temporary Overhead Feed to Road Lighting Units	WC/8
Series 1500		**Motorway Communications**	
	01	Loop Detector Installations	WC/8
Series 1700		**Structural Concrete**	
	01	In situ Concrete	WC/2
	02	Precast Concrete	WC/2
	03	Surface Finish of Concrete – Formwork	WC/2
	04	Steel Reinforcement for Structures	WC/2
	05	Structural Concrete Repairs	WC/2
	06	Backfilling to Structures with	WC/2

Series in Schedule 2	**Section –** (Item Number)	**Item Description**	**Work Category**
(1)	*(2)*	*(3)*	*(4)*
		Foamed Concrete	
Series 1800		**Structural Steelwork**	
	01	Repair of Defects	WC/1
	02	Edge Trimmer Repairs	WC/1
	03	Repairs to King Posts	WC/1
Series 2000		Waterproofing for Structures	
	01	Waterproofing	WC/2
	02	Surface Impregnation	WC/1
	03	Removal of Existing Waterproofing	WC/1
	04	Repairs to existing Waterproofing System	WC/1
Series 2300		**Bridge Expansion Joints and Sealing of Gaps**	
	01	Replacement of Bridge Deck Expansion Joints	WC/2
	02	Sealing of Gaps	WC/2
Series 2400		**Brickwork, Blockwork and Stonework**	
	01	Brickwork	WC/2
	02	Blockwork and Stonework	WC/2
	03	Rebedding Precast Concrete Copings	WC/2
	04	Repointing	WC/2
Series 3000		**Landscape and Ecology**	
	01	Ground Preparation and Cultivation	WC/1
	02	Seeding and Turfing	WC/2

Series in Schedule 2	**Section –** (Item Number)	**Item Description**	**Work Category**
(1)	*(2)*	*(3)*	*(4)*
	03	Planting Cell-Grown Stock	WC/2
	04	Planting Trees	WC/2
	05	Planting Shrubs	WC/2
	06	Planting Wild Flowers	WC/2
	07	Planting Bulbs	WC/2
	08	Mulching	WC/2
	09	Weed Control	WC/1
	10	Thinning and Coppicing of Trees	WC/1
	11	Scrub Control	WC/1
	12	Tree Surgery	WC/1
	13	Removal of Branches	WC/1
	14	Tree Felling	WC/1
	15	Tree Guards, Tubes and Ties	WC/2
Series 3300		**Site Investigation**	
	01	Rotary Coring of Existing Pavement	WC/1
	02	Rotary Coring of Existing Structures	WC/1
	03	Inspection Patches on Bridge Structures	WC/1
	04	Structural Investigations	WC/1
	05	Falling Weight Deflectometer Tests	WC/1
	06	Dynamic Cone Penetrometer Tests	WC/1
Series 5000		**Maintenance Painting of Steelwork**	
	01	Surface Preparation	WC/1
	02	Protective System	WC/2

Series in Schedule 2	**Section –** (Item Number)	**Item Description**	**Work Category**
(1)	*(2)*	*(3)*	*(4)*
Series 6100		**Core Operations Monthly Sums**	
	01	Schedule 1	WC/1
	02	Schedule 3	WC/1
	03	Schedule 4	WC/1
	04	Schedule 5	WC/1
	05	Schedule 6	WC/1
	06	Schedule 7	WC/1
	07	Schedule 8	WC/1
	08	Manage and Maintain Grip Tester	WC/1
Series 6200		**Professional Services**	
	01	Professional Services	WC/3
Series 6300		**Fee Percentages for Design, Procurement and Management**	
	01	Design of Schemes to be constructed by the Operating Company	Not Eligible
	02	Design of Works Contracts	Not Eligible
	03	Procurement of Works Contracts	Not Eligible
	04	Management of Works Contracts	Not Eligible
Series 6400		**Adjustment to Schedule of Rates and Prices**	
	01	Adjustment for Time Bands	Work Category as applied to the item being adjusted
	02	Adjustment for Work Within and Below Non-Tidal Open Water or Tidal Water	Work Category as applied to the item being adjusted

Series in Schedule 2	**Section –** (Item Number)	**Item Description**	**Work Category**
(1)	*(2)*	*(3)*	*(4)*
Series 6500		**Time Work Schedule**	
	01	Labour	WC/1
	02	Plant	WC/1
	03	Materials	Not Eligible
	04	Supplementary Services	Not Eligible
Series 6700		**Changes in Scope of Operations**	
	01	Changes in the Extent of the Unit Impacting on Core Operation items in Series 6100	WC/1
Series 6800		**Miscellaneous**	
	01	Anti-Graffiti Coatings	WC/2
	02	Vehicle Restraint Systems	WC/2
	03	Drainage	WC/1
	04	Cleaning of Street Furniture	WC/1
	05	Landscape Maintenance	WC/1
	06	Validate Network Inventory	WC/1
Series 6900		**Fair Rates and Prices**	
	01	Labour	Not Eligible
	02	Plant	Not Eligible
	03	On cost Uplift for Overheads, Profit/margin etc. (including allowance for traffic management)	Not Eligible

Series in Schedule 2	**Section –** (Item Number)	**Item Description**	**Work Category**
(1)	*(2)*	*(3)*	*(4)*
<u>Series 7000</u>		**Lump Sum Prices**	
	01	Payment of Accounts	Not Eligible
	02	Lump Sum Quotations	Not Eligible

This is Annex 5 to Schedule 1 referred to in the foregoing Agreement between Scottish Ministers and Amey LG Limited.

SCHEDULE 1

SCHEDULE 1 ANNEX 5 – Insurance Requirements

1. GENERAL

1.1.1 Subject to the other provisions of this Contract this Annex 5 specifies the:

(i) minimum amount of insurance that the Operating Company shall be required to effect and maintain in force throughout the entirety of this Contract, and

(ii) maximum excesses (being that portion of each claim for which the Insurer(s) shall not be liable to the Operating Company or which the Operating Company shall pay to insurers in respect of a legal liability claim),

in respect of the insurance that shall be provided by the Operating Company under the other provisions of this Contract.

2. INSURANCE REQUIREMENTS

2.1.1 Notwithstanding any other provisions of this Contract prior to the commencement of any Operations the Operating Company shall be required to provide evidence to the Scottish Ministers that the insurance referred to in Table 2.1.1/A and Table 3.1.1/A of this Schedule 1, Annex 5 shall be in full force and effect.

Table 2.1.1/A – Required Insurances

Reference Number	Description of Insurance
1.	Contractor's all risks insurance shall be provided by the Operating Company (including terrorism cover) to the full replacement or reinstatement value of: (i) the permanent and temporary work forming any part of the Operations, (ii) Constructional Plant used in the execution of the Operations,

Reference Number	Description of Insurance
	(iii) any materials that shall be or are intended to be incorporated into the work whether on Site, off Site, or in transit to or from Site, anywhere in continental Europe, including roll on roll off ferries, (iv) any plant required for the work whether on Site, off Site, or in transit to or from Site, anywhere in continental Europe, including roll on roll off ferries, for the Contract Period. The insurance that shall be provided by the Operating Company shall be written in the names including but not limited to those of the Scottish Ministers and the Operating Company and shall include sub-contractors of any tier of the Operating Company. The insurance shall include the endorsements referred to in paragraph 4.1.1 and paragraph 4.1.3 of this Schedule 1, Annex 5.
2.	Public liability insurance in respect of loss or damage to any property, including that of the Scottish Ministers and for the avoidance of doubt including Crown Property or death or injury to any person. The minimum limit of indemnity provided by the Operating Company shall be £155,000,000 in respect of each and every occurrence and unlimited in the period of insurance. The insurance shall be written in the names including but not limited to those of the Scottish Ministers and the Operating Company and shall include sub –contractors of any tier of the Operating Company. The insurance shall include the endorsements referred to in paragraphs 4.1.1 to 4.1.3 inclusive of this Schedule 1, Annex 5.
3.	Professional indemnity insurance for all such Operations including as a minimum: (i) any Design executed by or on behalf of or procured by the Operating Company, (ii) any review of the insurances of a Works Contractor, as required by Schedule 6 Part 1, carried out by or on behalf of the Operating Company, and (iii) for the Operating Company's business in general. The minimum limit of indemnity provided by the Operating Company shall be £10,000,000 in respect of each and every occurrence and unlimited in the period of insurance but shall be limited to £10,000,000 in the aggregate in respect of pollution losses including gradual pollution in each Annual Period. The insurance that shall be provided by the Operating Company shall cover the acts of the Operating Company and the Operating Company's liability for the acts of any of its contractors and sub-contractors of any tier in accordance with the other provisions of this Contract. The insurance that shall be provided by the Operating Company shall include the endorsements referred to in paragraph 4.1.1 of this Schedule 1, Annex 5.

Reference Number	Description of Insurance
4.	Employers' liability insurance with a limit of indemnity adequate to satisfy the requirements of the *Employers Liability Compulsory Insurance Act 1969*. and all other relevant Legislation. The insurance that shall be provided by the Operating Company shall include the endorsements referred to in paragraph 4.1.1 of this Schedule 1, Annex 5.
5.	Contractor's pollution legal liability insurance including consequential clean-up of any part of the Unit. Such insurance shall be for a minimum limit of indemnity of £10,000,000 in respect of any one loss and in the aggregate in each Annual Period. The insurance shall be written in the names including but not limited to those of the Scottish Ministers and the Operating Company and shall include the endorsements referred to in paragraphs 4.1.1 to 4.1.3 inclusive of this Schedule 1, Annex 5. This insurance is in addition to, and separate from, any Environmental Impairment Liability insurance required by any lease agreement entered into by the Scottish Ministers with the Operating Company.
6.	Comprehensive motor insurance in respect of all vehicles used by the Operating Company and its sub-contractors of any tier in the execution of this Contract. The insurance shall include the endorsements referred to in paragraph 4.1.1 of this Schedule 1, Annex 5.
7.	Property damage insurance on an all risks of physical loss or damage basis including but not limited to the Insured Perils specified in the separate lease agreement(s) between the Scottish Ministers and the Operating Company and including terrorism cover to the greatest extent available in the insurance market with a sum insured adequate to: (i) repair or reinstate the buildings within the Premises, and (ii) replace any assets of the Scottish Ministers defined Schedule 5 Part 7, Schedule 7 Part 6 and or Schedule 7 Part 7 that have been taken possession of by the Operating Company and or any goods, plant or materials that have been temporarily taken down or removed on a new for old basis, for the Contract Period. The insurance that shall be provided by the Operating Company shall be written in the names including but not limited to those of the Scottish Ministers and the Operating Company. The insurance shall include the endorsements referred to in Clauses 4.1.1 and 4.1.3 of this Schedule 1, Annex 5.

Reference Number	Description of Insurance
8.	Environmental insurance in addition to and separate from the contractors pollution legal liability insurance specified in Reference Number 5. of this Table 2.1.1/A to protect against liability arising from any and all pollution events occurring at the Premises including consequential clean-up of the Premises. Such insurance shall be for a minimum limit of indemnity of £10,000,000 in respect of any one loss and in the aggregate in each Annual Period plus an adequate amount in respect of own site clean-up. The insurance that shall be provided by the Operating Company shall be written in the names including but not limited to those of the Scottish Ministers and the Operating Company and shall include the endorsements referred to in Clauses 4.1.1 to 4.1.3 inclusive of this Schedule 1, Annex 5.

3. EXCESSES

3.1.1 In respect of each insurance that shall be provided by the Operating Company as required by this Contract the amount that the insurer for such insurance shall not be liable for in respect of each and every claim or series of claims arising out of one event shall not exceed the excess sums set out in Table 3.1.1/A.

Table 3.1.1/A – Maximum Excesses

Reference Number	Type of Insurance	Excess
1.	Contractors All Risks	£50,000 in respect of each and every loss other than: (i) Defective Design materials and workmanship where the amount shall be £150,000 in respect of each and every loss, and (ii) Constructional Plant where the amount shall be 10 percent of each and every loss (with a minimum in respect of each and every loss of £10,000).
2.	Public Liability (i) Personal Injury Claims (ii) Property Damage Claims	 Nil £50,000 in respect of each and every loss or series of losses arising out of one event.
3	Professional Indemnity	£250,000 in respect of each and every loss or series of losses arising out of one event.
4.	Employers Liability	Nil

Reference Number	Type of Insurance	Excess
5.	Contractors Pollution Legal Liability	£50,000 in respect of each and every loss or series of losses arising out of one event.
6.	Comprehensive Motor	£1,000.
7.	Property Damage	£25,000 in respect of each and every loss.
8.	Environmental	£50,000 in respect of each and every loss or series of losses arising out of one event.

4. INSURANCE POLICY REQUIREMENTS

4.1.1 All the insurance referred to in Table 2.1.1/A of this Schedule 1, Annex 5 shall be endorsed by the insurers to the effect that:

(i) such insurance shall be subject to Scots Law and the exclusive jurisdiction of the Scottish Courts, and

(ii) the insurers for such insurance shall provide not less than 30 days written notice to the Scottish Ministers prior to any cancellation non-renewal or modification to any such insurance.

4.1.2 The insurance referred to in reference numbers 2 and 5 of Table 2.1.1/A of this Schedule 1, Annex 5 shall be endorsed to the effect that actions between the insured parties shall be treated as though a separate insurance had been issued to each of them.

4.1.3 The insurance referred to in reference numbers 1, 2 and 5 of Table 2.1.1/A of this Schedule 1, Annex 5 shall be endorsed such that insurers for any such insurance accept the following provisions.

(i) Waiver of Duty of Disclosure,

(a) to waive their rights to receive from the Scottish Ministers disclosure of material circumstances or information,

(b) to avoid the insurance for any non-disclosure of material circumstances or information by the Scottish Ministers or his servants or agents, and

(c) to avoid the insurance and or claim damages against the Scottish Ministers for any misrepresentation made by or on behalf of the Scottish Ministers.

(ii) Waiver of Rights of Subrogation,

To waive all rights of subrogation and or claims for contributory negligence against the Scottish Ministers.

(iii) Joint Insured Clause,

That all the provisions of the insurance (except the sums/insured limits of liability) shall operate as if there was a separate insurance with and

covering each named insured without right of contribution from any other insurance which shall be carried by an insured.

Without limitation to the foregoing this shall be on the basis that including but not limited to the non-compliance with any insurance term condition or warranty or the non-disclosure and or misrepresentation of material circumstances or information by the Operating Company or any other co-insured under any such insurance shall not affect the rights and or interests of the Scottish Ministers under the insurance.

(iv) Non-Vitiation Clause,

That a vitiating act committed by one insured party under any insurance shall not prejudice the right to indemnity of any other insured party who has an insurable interest in such insurance and who has not committed a vitiating act.

This is Annex 6 to Schedule 1 referred to in the foregoing Agreement between Scottish Ministers and Amey LG Limited.

SCHEDULE 1

SCHEDULE 1 ANNEX 6 – Flowcharts

Figure Annex 6.1 Contractual Provisions for Dealing with Incidents

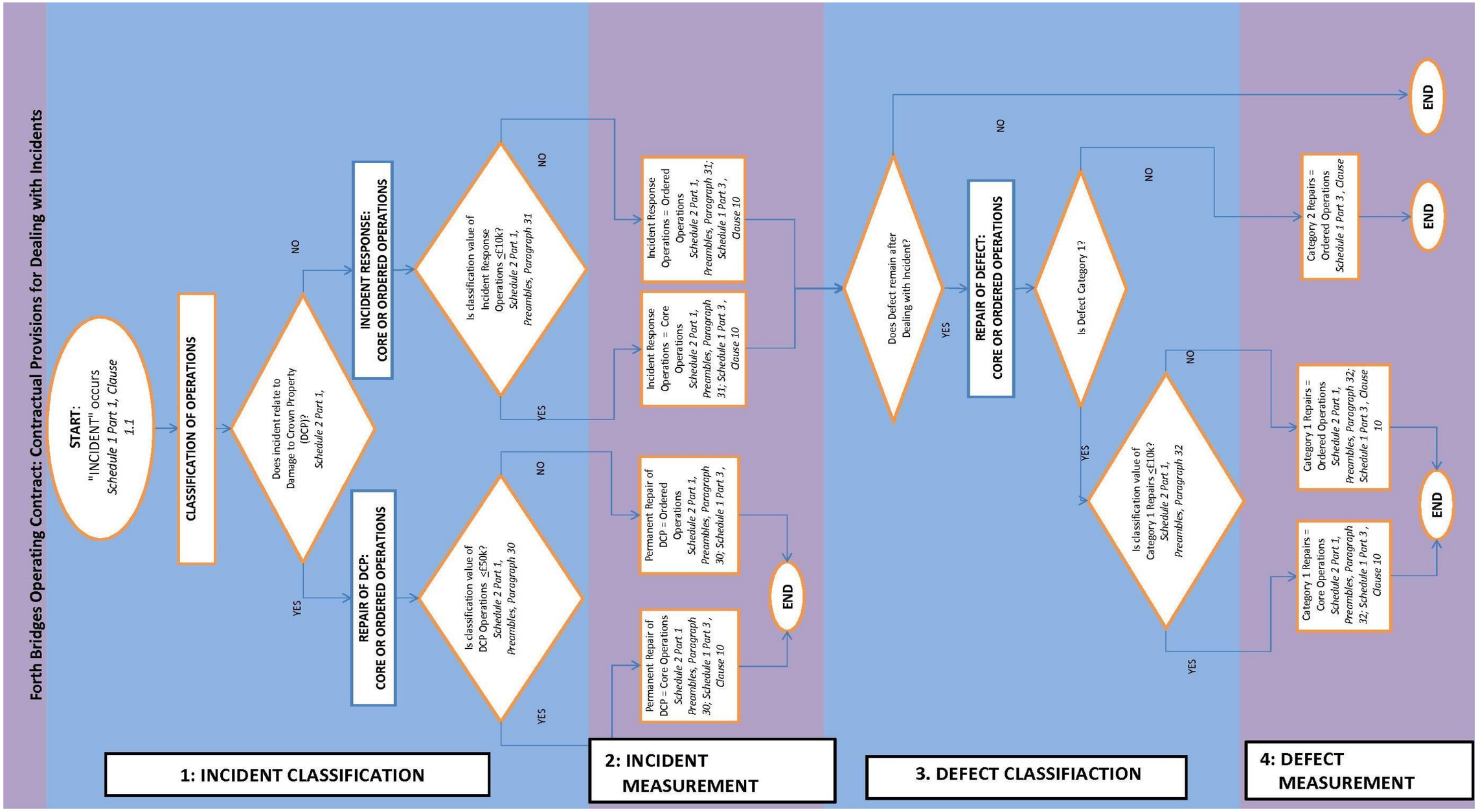

Figure Annex 6.2 Contractual Provisions for Design Associated with Schemes

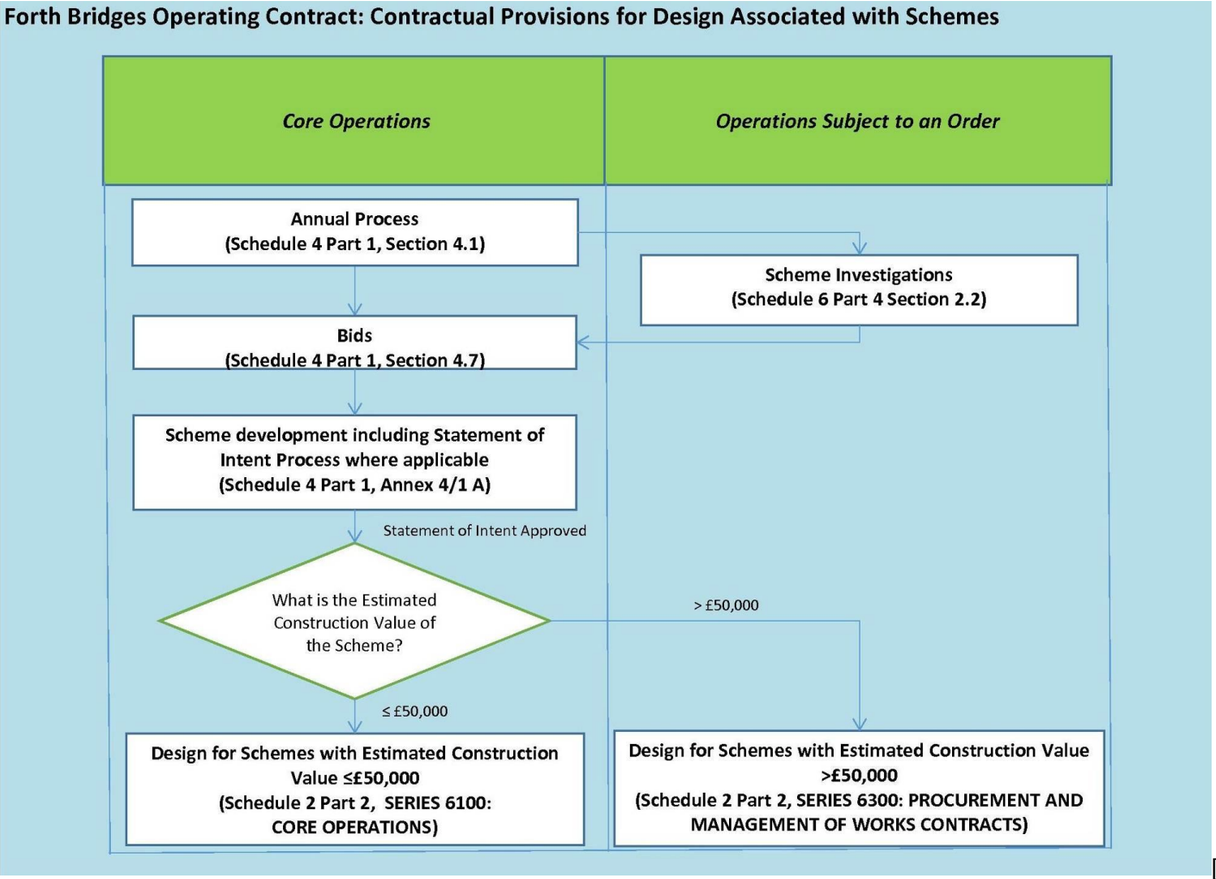

[

signed for and on behalf of The Scottish Ministers

by ……...Roy Brannen…….

on …..…….. December 2014……

at ……Glasgow……...……

……..……
Authorised Signatory

signed for and on behalf of AMEY LG Limited

by

……...……

on ……..….. December 2014……

at ……Glasgow……..….

……..…
Director/Company Secretary/
Authorised Signatory*

This is Annex 7 to Schedule 1 referred to in the foregoing Agreement between Scottish Ministers and Amey LG Limited.

SCHEDULE 1

SCHEDULE 1 ANNEX 7 – Claim Notification Form

CLAIM NOTIFICATION [*INSERT REFERENCE*]

Description of Issue	*Contractual basis for the Claim* *[Expand as necessary]*
Date [*OC to enter name***] became aware of the issue**	*Enter Date*
A 9901 activation bid has been submitted to Transport Scotland	*Yes/No*

Note: For the claim to remain valid, a full and detailed claim including appropriate supporting information and justification for entitlement to additional payment shall be submitted to the Scottish Ministers within 91 days of the date of this Claim Notification.

Signature …….

Name ……

Date……..

(To be completed by the Operating Company Representative)

SCOTTISH MINISTERS' REQUIREMENTS

SCHEDULE 2 PART 1

METHOD OF MEASUREMENT

CONTENTS **Page No.**

CHAPTER I	**1**
Definitions	1
CHAPTER II	**2**
General Principles	2
CHAPTER III	**3**
Preparation of Schedule of Rates and Prices	3
Preambles to Schedule of Rates and Prices	3
SERIES 100: PRELIMINARIES	**17**
Temporary Accommodation	17
Vehicles for the Overseeing Organisation	17
Communication System for the Overseeing Organisation	17
Operatives for the Overseeing Organisation	17
Information Boards	17
Traffic Safety and Management	17
Temporary Diversion of Traffic	17
Recovery Vehicles	17
Mobilisation	18
SERIES 200: SITE CLEARANCE	**22**
Site Clearance	22
SERIES 300: FENCING	**26**
Fencing, Gates and Stiles	26
Repairs to Existing Fencing – Renew Components	27
SERIES 400: ROAD RESTRAINT SYSTEMS (VEHICLE AND PEDESTRIAN)	**29**
Safety Barriers and Transitions	29
Terminals	29
Reconstruction of Concrete Ramps at Terminal Section	29
Connections to Existing Systems	30
Vehicle Parapets	30
Pedestrian Parapets and Pedestrian Guardrails	31
Repairs to Safety Barriers, Vehicle Parapets, Pedestrian Parapets and Pedestrian Guardrails	32
Painting of Safety Barriers, Vehicle Parapets and Pedestrian Parapets	32
Temporary Safety Barriers	33
Replacement of Central and Side Vehicle Barriers on Forth Road Bridge	34

SERIES 500: DRAINAGE AND SERVICE DUCTS **36**
Drains and Service Ducts (Excluding Filter Drains, Narrow Filter Drains and Fin Drains) 36
Filter Drains 36
Renewal, Raising or Lowering of Covers and Gratings on Existing Chambers and Gullies 37
Protection of Existing Sewer, Drain or Service Duct 38
Drain Surveys 38
Closed Circuit Television Drain Surveys 39

SERIES 600: EARTHWORKS **41**
Excavation 41
Excavation in Hard Material 41
Deposition of Fill 41
Disposal of Material 42
Imported Fill 42
Compaction of Fill 42
Soft Spots and Other Voids 42
Topsoiling and Storage of Topsoil 42
Completion of Formation and Sub-formation 42
Lining of Watercourses 42
Trial Pits 43
Siding out of Carriageways, Footways and Paved Areas 43

SERIES 700: PAVEMENTS **44**
Sub-base 44
Pavement 44
Reinstatement of Carriageway, Hardshoulder, Emergency Crossing, Hardstrip, Lay-by or Bus bay and Paved Areas 46
Repairs and Patching to Carriageways 47
Pavement Reinforcement 47
Grip Testing 47
Overband Sealing 48
Hand laid Mastic Asphalt on Forth Road Bridge 48
Removal of surfacing on Forth Road Bridge 50

SERIES 1100: KERBS, FOOTWAYS AND PAVED AREAS **51**
Kerbs, Channels, Edgings, Combined Kerbs and Channels, Combined Drainage and Kerb Blocks, and Linear Drainage Channel Systems 51
Footways and Paved Areas 51
Remove from Store or from where previously Set Aside and Relay Paving Flags and Blocks 52
Cold Milling (Planing) 53
Reinstatement of Paved Areas 53
Patching of Footways and Paved Areas 53

SERIES 1200: TRAFFIC SIGNS AND ROAD MARKINGS **55**
Traffic Signs Faces 55
Passively Safe Traffic Sign Posts 56
Traffic Sign Bases 58
Sign Lighting Units 58
Sign Bracket Arms 59

Road Markings 60
Road Studs 61
Marker Posts 61
Passively Safe Flexible Chevrons 61
Location Lettering and Marking of Existing Traffic Signs 62

SERIES 1300: ROAD LIGHTING COLUMNS AND BRACKETS, CCTV MASTS AND CANTILEVER MASTS 63
Road Lighting Columns and Brackets, Wall Mountings, CCTV Masts and Cantilever Masts 63
Remove from Store and Re-erect Road Lighting Columns and Brackets, Wall Mountings, CCTV Masts and Cantilever Masts 64
Luminaires 65
Replace Lamps 66
Marking and lettering of Existing Road Lighting Columns 66

SERIES 1400: ELECTRICAL WORK FOR ROAD LIGHTING AND TRAFFIC SIGNS 68
Locating Buried Road Lighting and Traffic Signs Cable 68
Trench for Cable or Duct 68
Cable and Duct 68
Chambers 68
Disconnection of Cables 68
Equipotential Bonding 70
Temporary Overhead Feed to Road Lighting Units 71

SERIES 1500: MOTORWAY COMMUNICATIONS 73
Loop Detector Installations 73

SERIES 1700: STRUCTURAL CONCRETE 74
Precast Concrete 74
Structural Concrete Repairs 74
Formwork for Concrete Repairs 75
Steel Reinforcement for Concrete Repairs 75
Backfilling to Structures with Foamed Concrete 76

SERIES 1800: STEELWORK FOR STRUCTURES 77
Butt weld, fillet weld and other defect repairs to steelwork 77
Welding and Flame Cutting Procedure Trials and Application Trials 78
Other Trials and Demonstrations 79
Steelwork Inspection on Forth Road Bridge 80
Edge Trimmer Repair and Replacement 81
Replacement of King Post on Forth Road Bridge 82
Tension Check of Forth Road Bridge Cable Band Bolts 83
Replacement of Packs between the Half Joints in the Longitudinal Stringers on the Forth Road Bridge 83

SERIES 2000: WATERPROOFING FOR STRUCTURES 85
Waterproofing 85
Removal of Existing Waterproofing 85
Repairs to Existing Waterproofing 86

SERIES 2300: BRIDGE EXPANSION JOINTS AND SEALING OF GAPS 87
Bridge Deck Expansion Joints 87
Sealing of Gaps 88

SERIES 2400: BRICKWORK, BLOCKWORK AND STONEWORK 91
Brickwork 91
Blockwork and Stonework 91
Remove from Store and Relay Brickwork, Blockwork or Stonework 91
Rebedding of Precast Concrete Copings 91
Repointing 92

SERIES 3000: LANDSCAPE AND ECOLOGY 94
Ground Preparation and Cultivation 94
Planting 94
Mulching 94
Weed Control 94
Maintenance of Established Trees and Shrubs 94
Maintenance of Established Wildflower Areas, Areas of Nature Conservation Value and Ornamental Planting Areas 95
Tubes, Guards and Ties and Removal of Tubes, Guards and Ties 95

SERIES 3300: SITE INVESTIGATION 97
Rotary Coring of Existing Pavement 97
Rotary Coring of Existing Structures 97
Inspection Patches on Bridge Structures 98
Structural Investigations 99
Falling Weight Deflectometer Tests 100
Dynamic Cone Penetrometer Tests 100

SERIES 5000: MAINTENANCE PAINTING OF STEELWORK 102
Surface Preparation and Protective System 102
Application of Gulf Metalcoat to hangers and main cable hand strands of Forth Road Bridge 102

SERIES 6100: CORE OPERATIONS MONTHLY SUMS 104
Core Operations Monthly Sums 104

SERIES 6200: PROFESSIONAL SERVICES 137
Professional Services 137

SERIES 6300: FEE PERCENTAGES FOR DESIGN, PROCUREMENT AND MANAGEMENT 139
Generally 139
Fee Percentages for Design of Schemes to be Constructed by the Operating Company 139
Fee Percentages for Design, Procurement and Management of Works Contracts 140

SERIES 6400: ADJUSTMENT TO SCHEDULE OF RATES AND PRICES 143
Adjustment for Time Band 143
Adjustment for Works Within and Below Non-Tidal Open Water or Tidal Water 144

SERIES 6500: TIME WORK SCHEDULE **145**
Time Work Schedule 145
Labour 145
Plant 147
Materials 149
Supplementary Services 150

SERIES 6700: CHANGES IN SCOPE OF OPERATIONS **152**
Changes in the Extent of the Unit Impacting on Core Operations Items in Series 6100 152

SERIES 6800: MISCELLANEOUS **154**
Anti-Graffiti Coatings 154
Vehicle Restraint Systems 154
Drainage 155
Cleaning of Street Furniture 156
Landscape Maintenance 156
Grass Cutting 156
Hedge Trimming 157
Litter Clearance 158

SERIES 7000: LUMP SUM PRICES **159**
Payment of Accounts 159
Lump Sum Quotations 160

SCOTTISH MINISTERS' REQUIREMENTS

SCHEDULE 2 PART 1

METHOD OF MEASUREMENT

CHAPTER I

Definitions

Definitions given in Volume 4 Section 1 Chapter I of the *Manual of Contract Documents for Highway Works* hereby apply unless amended otherwise and as stated below.

Delete all references to "Bill of Quantities" and replace with "Schedule of Rates and Prices".

Delete all references to "Contractor" and replace with "Operating Company".

Delete sub paragraph 1(c) and insert the following sub paragraph 1(c):

1(c) "Schedule of Rates and Prices" means a list of items giving brief identifying descriptions.

Quantity Band means a quantity measurement range associated with a particular item. Quantity Bands appended with "+" indicate the stated Quantity Band value or greater.

SCOTTISH MINISTERS' REQUIREMENTS

SCHEDULE 2 PART 1

METHOD OF MEASUREMENT

CHAPTER II

General Principles

General Principles given in Volume 4 Section 1 Chapter II of the *Manual of Contract Documents for Highway Works* hereby apply except as stated below.

Delete all references to "Bill of Quantities" and replace with "Schedule of Rates and Prices".

Delete all references to "Contractor" and replace with "Operating Company".

SCOTTISH MINISTERS' REQUIREMENTS

SCHEDULE 2 PART 1

METHOD OF MEASUREMENT

CHAPTER III

Preparation of Schedule of Rates and Prices

Preparation of Schedule of Rates and Prices shall be in accordance with Preparation of Bills of Quantities given in Volume 4 Section 1 Chapter III of the *Manual of Contract Documents for Highway Works* unless amended otherwise and as stated below.

Delete all references to "Bill of Quantities" and replace with "Schedule of Rates and Prices".

Delete all references to "Contractor" and replace with "Operating Company".

Preambles to Schedule of Rates and Prices

Delete preambles set down in Volume 4 Section 1 Chapter III of the Manual of Contract Documents for Highway Works and replace with the following:

General Directions

1 The Schedule of Rates and Prices has been prepared generally in accordance with the principles used in the *Method of Measurement for Highway Works published by The Stationery Office as Section 1 of Volume 4 of the Manual of Contract Documents for Highway Works* as amended by this Part of this Schedule.

The relevant publication date of each page of the *Method of Measurement for Highways Works* is given in the Schedule of Pages and Relevant Publication Dates.

2 In the Schedule of Rates and Prices the sub-headings and item descriptions identify the work covered by the respective items, read in conjunction with the matters listed against the relevant marginal headings "Item coverage" in Chapter IV of the *Method of Measurement for Highway Works*, these Preambles and the amendments to the Method of Measurement immediately following these Preambles. The nature and extent of the work and, where relevant, its frequency of execution, is to be ascertained or assessed by reference to the Scottish Ministers' Requirements and the Conditions of Contract. The rates and prices entered in the Schedule of Rates and Prices shall be deemed to be the full inclusive value of the work covered by the several items including the following, unless expressly stated otherwise:

(i) Labour and costs in connection therewith.

(ii) The supply of materials, goods, storage and costs in connection therewith including delivery to anywhere within the Unit, taking delivery of materials and goods supplied by others, unloading, storage, and costs in connection therewith.

(iii) Plant and costs in connection therewith.

(iv) Fixing, erecting and installing or placing of materials and goods in position.

(v) Temporary work including Design of temporary work.

(vi) The effect on the phasing of the Operations or any element of the Operations to the extent set forth or reasonably implied.

(vii) General obligations, liabilities and risks involved in the execution of the Operations set forth or reasonably implied in the documents on which the Final Tender Submission is based.

(viii) Establishment charges including temporary accommodation at individual Sites and all accommodation, depots, stores and other similar facilities required by the Operating Company for the duration of this Contract, overheads and profit.

(ix) Waste.

(x) Testing and measuring in accordance with this Contract including supplying results of tests and measurements including providing test certificates.

(xi) Attendance and transport for sampling and testing carried out by the Overseeing Organisation.

(xii) Checking, inspecting, examining, measuring and verifying goods, materials and workmanship including supplying results, reports and certificates.

(xiii) Traffic safety and traffic management measures as required by this Contract.

(xiv) All travelling connected with Operations.

(xv) Complying with the quality management requirements of this Contract and providing Certificates of conformity.

(xvi) Providing land for Plant, stores, working space, borrow pits or spoil dumps required.

(xvii) Communication system.

(xviii) Insurance provision.

(xix) All obligations activities duties and responsibilities of the Operating Company set out in this Contract commencing at the end of the final Annual Period until such time as such obligations activities duties and responsibilities have been executed by the Operating Company.

(xx) Vehicles, communication system and operatives for the Overseeing Organisation.

(xxi) Consultation approvals consents and any other thing required from to or with the Operational Partners to obtain access and method of working for rebuilding including but not limited to Historic Scotland to enable timescales for rebuilding to be achieved.

(xxii) Information signs and or boards on all Sites.

(xxiii) Access provision maintenance and removal including design of accesses.

(xxiv) Temporary diversion of traffic.

Mobilisation	3	Items for mobilisation are contained within Series 100 Preliminaries sub series 02 for items associated with Commencement of Service Date 1 and sub series 03 for items associated with Commencement of Service Date 2.
Measurement	4	The measurement of quantity against each item shall be computed from the dimensions stated in the Design or physically measured in the absence of such dimensions unless stated otherwise in the Method of Measurement. The measurement of quantity against each item shall be computed net to the nearest whole number, except for: 1. measurement of tonnage, hectares and kilometres in which cases the quantities shall be to three decimal places, 2. measurement of hours for which the quantity shall be to the nearest quarter hour, 3. measurement of mobilisation items which shall be a % of the item sum to the nearest whole percentage point, 4. measurement of months shall be to the nearest whole percentage point. The Schedule of Rates and Prices contains adjustment items. The purpose of the adjustment item is to vary the content of the original item to which the adjustment applies. Separate item coverage has not been included in the amendments to the method of measurement for adjustment items. Where adjustment items have been included in the Schedule of Rates and Prices they shall be deemed to include the same features and item coverage of the original Schedule of Rates and Prices item to which they apply.
Pricing of Items	5	Rates and prices are expressed to two decimal places. For items where the rate is '%', a percentage value is expressed and not a decimal equivalent. For example, five percent is expressed as '5' and not '0.05'. Where a percentage value is entered as 0% or is negative any costs and associated charges will be deemed to be included in the other rates and prices.
Schedule of Rates and Prices	6	Where provision has been made in the Schedule of Rates and Prices for items of work to be measured and paid for in various quantity bands the measurement and payment of such items for each individual Scheme shall be made using only the rate entered under the appropriate quantity band. The quantity band used shall be that obtained by the summation of the final quantities of like work within a Scheme unless a Scheme covers more than one Site and the distance between discrete Sites within the Scheme exceeds the minimum distances between traffic management measures as detailed in Table 3.3 of Chapter 8 of the *Traffic Signs Manual* in which case the quantity band used shall be that obtained by the

summation of the quantities of like work at each discrete Site within the Scheme.

Alternative Specified Materials, Designs and Options Within Types of Pavement	7	Where a choice of alternatives is permitted in this Contract, the item description and the rates and prices inserted shall be deemed to include any of the permitted alternative materials or designs the Operating Company may elect to use. In all cases the rates and prices inserted in all Series of the Schedule of Rates and Prices shall be deemed to include for any adjustments of work content, rates, costs, programming, method of working and other effect occasioned by the choice of alternatives elected to be used or constructed by the Operating Company.
Privately and Publicly Owned Services or Supplies	8	The Operating Company shall allow in the rates and prices for locating, marking and taking measures for the support and full protection of pipes, cables and other apparatus. The rates and prices shall include for obtaining the written consent and anything else required of, from, to or with the Relevant Organisation to interrupt the service or supply and for keeping the Scottish Ministers informed in writing of all arrangements it makes with owners of privately owned services or supplies, Undertakers and Statutory Authority and other parties as appropriate.
Labours	9	Labours in connection with Nominated Sub-contractors shall include but not be limited to: (i) in the case of Operations – for affording the use of existing working space, access, temporary roads, erected scaffolding, working shelters, staging, ladders, hoists, storage, latrines, messing, welfare and all other facilities existing on the Unit and the provision of protection, water, electricity for lighting and clearing away rubbish, debris and waste and other similar material arising from the Operations, (ii) in the case of goods, materials or service supplied – for taking delivery, unloading, storing, protecting and returning crates, cartons and packing materials.
Location, Frequency and timescales of Schedule items	10	The Operating Company shall allow in the rates and prices for carrying out the Operations at any location within or associated with the Unit, and shall also allow for the items in the Schedule of Rates and Prices being used only once, a number of times or not at all during this Contract. The Operating Company shall allow in the rates and prices for undertaking any Operations within the timescales prescribed in this Contract and or any Order.
Roadworks Overall Requirements	11	The Operating Company shall allow in the rates and prices for complying with requirements in respect of pavement construction, horizontal alignments, surface levels and surface regularity of pavement courses, cold weather working, use of surfaces by traffic and Plant and general requirements for sub-bases and road bases.

Work Within and Below Non-Tidal Open Water or Tidal Water	12	The Operating Company shall allow in the rates and prices for taking measures to execute all Operations above non tidal open water and above mean high water springs. All Operations executed within and below non tidal open water or between mean high water springs and mean low water springs or below mean low water springs are subject to adjustment in accordance with Series 6400. The datum for measurement of Operations executed within and below non tidal open water shall be stated in the Order. The mean high water springs and mean low water springs are equivalent levels relative to chart datum determined by the United Kingdom Hydrographic Office.
Dealing with Flow	13	The Operating Company shall allow in the rates and prices for taking measures to deal with the existing flow of water, sewage and other flowing material.
Taxes Levies Contributions Premiums Refunds or Landfill Tax	14	The Operating Company shall allow in the rates and prices for all taxes, levies, contributions, premiums, refunds or landfill tax as described in Schedule 1, ct.
Site Limitations and Constraints	15	The Operating Company shall allow in the rates and prices for complying with any limitations and constraints on the use of or connected with the Unit.
Hard Material	16	For the purposes of this Contract the following are designated as Hard Material in accordance with Chapter 1 of the *Method of Measurement for Highway Works* Definitions, paragraph 1(h): (i) material which requires the use of blasting, breakers or splitters for the removal but excluding individual masses less than 0.20 cubic metres, (ii) existing pavements, footways, paved areas (but excluding unbound materials) and foundations in masses in excess of 0.20 cubic metres.
Equivalent Products and Materials	17	Where the Operating Company offers an equivalent product or material in place of the one identified or specified, which is accepted for incorporation into the Operations by the Scottish Ministers, then the rates and prices are deemed to include for all the obligations and costs associated with the incorporation of the equivalent into the Operations, including but not limited to Design, provision of data and Drawings, Certificates, awaiting approvals consents and other similar considerations, re-submissions and modifications and amendments to the Operations. Unless specifically stated to the contrary in this Contract the measurement of the Operations affected by the incorporation of the equivalent products and materials shall be based on this Contract and not on the Operations as amended and completed to incorporate the equivalent products and materials.
Management of Operations	18	The Operating Company shall allow in the rates and prices for the supervision by the Operating Company of Operations.

Repair Work and Alterations	19	Various elements of the Schedule of Rates and Prices identify work of repair and or alteration. Notwithstanding such separately identified items the Operating Company shall allow in the rates and prices for executing any of the other items in the Schedule of Rates and Prices as repairs and or alterations to existing.
Time Bands and Percentage Adjustments	20	The Operating Company shall allow in the rates and prices in the Schedule of Rates and Prices for executing Operations during Normal Working Hours (time band reference 1), except for items in Series 6100 to 6700 (inclusive) and Series 7000 which are all deemed to be undertaken at any time and shall not be subject to any time band adjustments. Percentage adjustments do not apply to Operations undertaken in time band reference 1. Operations that are executed within Normal Working Hours but subject to working hours restrictions as referred to in the Specification shall be deemed to be in time band reference 1 and therefore are not subject to adjustment. Percentage adjustments shall be made to the rates and prices in the Schedules of Rates and Prices in respect of Operations executed outwith Normal Working Hours when the hours of working are subject to restrictions for the routes and locations referred to in Schedule 9 Part 2, Appendix 1/17. Notwithstanding the previous paragraph, Operations executed outwith Normal Working Hours shall only be measured if restrictions stated in Schedule 9 Part 2, Appendix 1/17 prohibit the Operations from being carried out within Normal Working Hours, or if the Director has given written consent that the Operations may be measured using the appropriate time band adjustments. For routes and locations where no working hours restrictions apply, Operations executed outwith Normal Working Hours shall not be subject to time band adjustments unless the Director has given written consent.
Other Work on the Unit, the Police and Emergency Services	21	The Operating Company shall allow in the rates and prices for the presence from time to time of authorised contractors and bodies and other third parties executing work on the Unit. Emergency Services require access through the Unit at all times and the Operating Company shall allow in the rates and prices for complying with this requirement.
Traffic Safety and Traffic Management	22	The Operating Company shall allow in the rates and prices for traffic safety and traffic management to undertake the Operations. The rates and prices shall include the Design, provision, maintenance and removal of and any costs related to traffic safety and traffic management measures referred to in Schedule 9 of this Contract and the following: (i) phasing the Operations in a manner acceptable to the Director, the Traffic Scotland Service and the police for the continuing flow of traffic including maintaining access to properties,

(ii) complying with the requirements of the *'Traffic Signs Regulations and General Directions'* and with the recommendations contained in Chapter 8 of the *Traffic Signs Manual* or where the circumstances of any particular case are not covered, including but not limited to any additional traffic safety and traffic management measures required by the police, submitting proposals for dealing with such situations including but not limited to risk assessments and other similar reports information and advice to the Director,

(iii) enhancement of the requirements of Chapter 8 of the *Traffic Signs Manual* as deemed necessary by the Operating Company to satisfy specific Site safety risk assessments,

(iv) continuing traffic safety and management outside the boundaries of the Unit when associated with Operations on the Unit and including all necessary liaison with relevant authorities and other third parties,

(v) requirements to deal with reduced Lane widths due to any reason including but not limited to convoy working,

(vi) alterations to traffic management measures or programmes to take account of events on or outwith the Unit that prevent or constrain the use of traffic management or planned Operations.

Measuring, Sampling and Testing	23	The Operating Company shall allow in the rates and prices for measuring, sampling and testing as required by this Contract.
Payments to Undertakers	24	The Operating Company may be required to place orders with Undertakers, holders of licences issued in accordance with Section 109 of the *New Roads and Street Works Act 1991*, franchise holders, and other similar parties for renewal, maintenance or repair of services on the Unit and the payment for such orders may well be required in advance of the work being undertaken. Such work will be subject to an Order on each occasion but the Operating Company shall allow in the percentage adjustment for all additional cost associated with the payments for such work and the fact that invoices for the Undertakers may not be immediately available. Payment of Undertakers accounts is included in Series 7000.
Disposal	25	The Operating Company shall allow in the rates and prices for disposal to a licensed disposal facility which may include a licensed recycling facility.
Remove from Store	26	The Operating Company shall allow in the rates and prices for remove from store for collecting from stores on or off the Site or from where material has been set aside for re-use.
Contract Price Fluctuations	27	The Operating Company shall allow in the rates and prices for all costs in respect of Contract Price Fluctuation that are not covered by the provisions of Schedule 1 for Contract Price Fluctuations.

Amendment to the Method of Measurement	28	For the purpose of this Contract the *Method of Measurement for Highway Works* is amended: (i) by replacing the words "Bills of Quantities" wherever they occur with the words "Schedule of Rates and Prices", (ii) by replacing the word "Contractor" wherever it occurs with the words "Operating Company", (iii) by construing any reference to "rates", "prices", "Rates", "Prices", "rates and prices" or "Rates and Prices" to mean a reference to rates and prices contained in the Schedule of Rates and Prices, (iv) by replacing the full stop to the last item in item coverages with a semi-colon in every case where additional items have been added, and (v) in accordance with the pages immediately following.
Classification of Operations associated with Repair of Damage to Crown Property, incidents, and Repair of Category 1 Defects	29	Operations associated with incidents, Repair of Category 1 Defects and Damage to Crown Property will be classified in accordance with the following protocol (refer also to Annex 6 of Schedule 1). (i) Repair of Damage to Crown Property including any associated Incident Response Operations will be classified in accordance with paragraph 30. (ii) Incident Response Operations will be classified in accordance with paragraph 31 where the incident is not associated with Damage to Crown Property. (iii) Where a Category 1 Defect exists following execution of Incident Response Operations that is not related to Damage to Crown Property repair will be classified in accordance with paragraph 32.
Repair of Damage to Crown Property	30	Repair of Damage to Crown Property will be classified as either "of value of repairs not more than £50,000" or "of value of repairs more than £50,000". The classification shall be established using applicable items contained within the following Series contained within Schedule 2 Part 2: (i) Series 100 to 5000 inclusive, (ii) Series 6400, 6500 and Series 6800. Series 6500 items shall only be used for classification when there are no applicable items in any of the other Series. The classification shall include: (i) initial, secondary, and back-up Incident Response Operations excluding traffic management measures, (ii) temporary repairs and temporary safety measures to allow safety and usability to be restored,

(iii) betterment.

The classification shall exclude:

(i) travel to and from the scene of an incident,

(ii) acting on Orders and or the instructions of the Emergency Services,

(iii) reporting to the Director details of all Operations carried out and materials used,

(iv) disruption to other work as a result of attending incidents,

(v) attending a reported incident related to Damage to Crown Property where no action is required,

(vi) maintaining temporary repairs until a permanent repair is carried out,

(vii) police reports,

(viii) establishing, maintaining and removing traffic management prior to repair Operations,

(ix) assessments and Design,

(x) removal of dead animals and objects,

(xi) cleaning and sweeping of hard areas,

(xii) recovery of the costs of repair of the damage to Crown Property from the third party which caused the damage.

If an incidence of Damage to Crown Property is classified initially as "of value of repairs more than £50,000" but subsequently has a final classification "of value of repairs not more than £50,000", the Operating Company shall reimburse the Director for any payment received.

Incidences of Damage to Crown Property which are classified "of value of repairs more than £50,000" shall be valued in accordance with the provisions of Schedule 1 Part 3 for valuation of Orders.

Incident Response Operations

31 Incident Response Operations for individual Incidents shall be classified as "of value not more than £10,000" or "of value more than £10,000". The classification shall be established using applicable items contained within the following Series contained within Schedule 2 Part 2:

(i) Series 100 to 5000 inclusive,

(ii) Series 6400, 6500 and Series 6800.

Series 6500 items shall only be used for classification when there are no applicable items in any of the other Series.

The classification shall include:

(i) initial, secondary, and back-up Incident Response Operations,

(ii) temporary repairs and temporary safety measures to allow safety and usability to be restored.

The classification shall exclude:

(i) travel to and from the scene of the Incident,

(ii) acting on Orders and or the instructions of the Emergency Services,

(iii) reporting to the Director details of all Operations carried out and materials used,

(iv) disruption to other work as a result of attending Incidents,

(v) attending a reported Incident where no action is required,

(vi) maintaining temporary repairs until a permanent repair is carried out,

(vii) assessment and Design,

(viii) removal of dead animals and objects,

(ix) cleaning and sweeping of hard areas.

If an Incident is classified initially as "of value more than £10,000" but subsequently has a final classification "of value less than or equal to £10,000", the Operating Company shall reimburse the Director for any payment received.

Incidents which are classified "of value more than £10,000" shall be valued in accordance with the provisions of Schedule 1 Part 3 for valuation of Orders.

Repairs of Category 1 Defects

32 Repairs of Category 1 Defects shall be classified as "of value of repairs not more than £10,000" or "of value of repairs more than £10,000". The classification shall be established using applicable items contained within the following Series contained within Schedule 2 Part 2:

(i) Series 100 to 5000 inclusive,

(ii) Series 6400, 6500 and Series 6800.

Series 6500 items shall only be used for classification when there are no applicable items in any of the other Series.

The classification shall include:

(i) establishing, maintaining and removing traffic management subsequent to Incident Response Operations and prior to repair Operations,

(ii) the cost of maintaining temporary repairs,

(iii) travel to and from the scene of the Category 1 Defect,

(iv) reporting to the Director details of all Operations carried out and materials used,

(v) disruption to other work as a result of attending Category 1 Defects,

(vi) attending a reported Category 1 Defect where no Defect is found,

(vii) assessment and Design,

(viii) removal of dead animals and objects,

(ix) cleaning and sweeping of hard areas.

If a Category 1 Defect is classified initially "of value of repairs more than £10,000" but subsequently has a final classification of "value of repairs less than or equal to £10,000", the Operating Company shall reimburse the Director for any payment received.

Category 1 Defects which are classified as "of value of repairs more than £10,000" shall be valued in accordance with the provisions of Schedule 1 Part 3 for valuation of Orders.

In addition to the standard Series the following additional Series are included:

3300 Site Investigations,

6100 Core Operations Monthly Sums,

6200 Professional Services,

6300 Fee Percentages for Design, Procurement and Management,

6400 Adjustment to Schedule of Rates and Prices,

6500 Time Work Schedule,

6600 Not used,

6700 Changes in Scope of Operations,

6800 Miscellaneous,

6900 Not used,

7000 Lump Sum Prices.

Method of Measurement for Highway Works

Schedule of Pages and Relevant Publication Dates

Chapter/Series		Page Number	Publication Date
Contents		1	November 2004
		2	May 2005
		3	November 2004
		4 to 7 inclusive	May 2005
Chapter I		1 to 3 inclusive	March 1998
Chapter II		1	March 1998
		2	May 2001
Chapter III		1	March 1998
		2	May 2001
		3 to 12 inclusive	May 2004
		13	November 2006
		14 to 16 inclusive	May 2005
		15 to 19 inclusive	November 2006
Chapter IV		1	March 1998
	100	1 to 2 inclusive	March 1998
		3 to 7 inclusive	May 2001
		8	November 2004
		9 to 11 inclusive	May 2001
		12	November 2004
		13 to 15 inclusive	May 2001
	200	1	May 2001
		2 to 3 inclusive	May 2004
		4	May 2001
	300	1 to 5 inclusive	May 2001
	400	1 to 2 and 4 to 8 inclusive	November 2004
		3	November 2006
	500	1 to 5 inclusive	May 2001
		6	November 2004
		7 to 13 inclusive	May 2001
		14	May 2005
		15	May 2001
		16 to 17 inclusive	May 2005
		18	May 2001

Chapter/Series	Page Number	Publication Date
	19	November 2003
600	1	May 2002
	2	May 2001
	3	March 1998
	4 to 11 inclusive	November 2004
	12	May 2002
	13 to 14 inclusive	November 2004
	15 to 38 inclusive	May 2001
	N1 to N3 inclusive	May 2002
700	1	May 2001
	2	May 2002
	3	May 2001
	4 to 5 inclusive	May 2002
	6	May 2001
	7 to 9 inclusive	May 2002
	10	May 2001
	11	May 2002
	12 to 13 inclusive	May 2001
	14	May 2002
	15 to 18 inclusive	May 2001
800	Not taken up	
900	Not taken up	
1000	Not taken up	
1100	1	May 2001
	2	November 2004
	3	May 2001
	4 to 5 inclusive	May 2002
	6	May 2001
	7 to 8 inclusive	May 2005
1200	1 to 2 inclusive	May 2001
	3 to 5 inclusive	March 1998
	6 to 11 inclusive	May 2001
1300	1 to 3 inclusive	November 2003
1400	1 to 2 inclusive	May 2001
	3	May 2005

Chapter/Series	Page Number	Publication Date
	4 to 8 inclusive	May 2001
	9	May 2005
1500	1 to 2 inclusive	May 2001
	3	May 2005
	4 to 7 inclusive	February 2003
	8 to 12 inclusive	May 2001
1600	1 to 2 inclusive	March 1998
	3 to 6 inclusive	May 2001
	7	March 1998
	8 to 19 inclusive	May 2001
1700	1	May 2004
	2	May 2001
	3	May 2004
	4 to 11 inclusive	May 2001
1800	1	March 1998
	2 to 5 inclusive	May 2001
1900	1	May 2003
2000	1	May 2002
	2 to 3 inclusive	May 2001
2100	1	March 1998
2200	Not taken up	May 2004
2300	1 to 3 inclusive	March 1998
2400	1 to 3 inclusive	May 2001
	4	March 1998
2500	1 to 2 inclusive	May 2001
2600	Not taken up	
2700	1	May 2001
3000	1 to 15 inclusive	May 2001
5000	1 to 2 inclusive	May 2003

SCOTTISH MINISTERS' REQUIREMENTS

SCHEDULE 2 PART 1

METHOD OF MEASUREMENT

SERIES 100: PRELIMINARIES

Temporary Accommodation

Delete paragraphs 2 to 6 inclusive.

Vehicles for the Overseeing Organisation

Delete paragraphs 7 to 10 inclusive.

Communication System for the Overseeing Organisation

Delete paragraphs 11 to 13 inclusive.

Operatives for the Overseeing Organisation

Delete paragraphs 14 to 17 inclusive.

Information Boards

Delete paragraphs 18 to 20 inclusive.

Traffic Safety and Management

Delete paragraphs 21 to 27 inclusive.

Temporary Diversion of Traffic

Delete paragraphs 28 to 33 inclusive.

Recovery Vehicles

Delete paragraph 34 to 39 inclusive and insert the following paragraphs 34 to 37 inclusive:

Recovery Vehicles

Units	34	The unit of measurement shall be: (i) recovery vehicle …….day.
Measurement	35	The measurement of recovery vehicles shall be for each day or part thereof during which the recovery vehicle is provided. Recovery vehicles are deemed to be Site based and not subject to a standby facility.
Itemisation	36	Separate items shall be provided for recovery vehicles in accordance with Chapter II paragraphs 3 and 4 and the following:
Recovery Vehicles	37	The items for recovery vehicles shall in accordance with the Preambles to Schedule of Rates and Prices General Directions include for:

Group	Feature	
I	1	Each type of recovery vehicle.

Item coverage

(a) equipment including communications equipment and identification sign,

(b) all taxes levies licensing certification and other similar requirements for operating on the public road or highway,

(c) comprehensive insurance,

(d) replacement vehicle including equipment,

(e) depreciation,

(f) maintenance,

(g) fuel, oil and consumables,

(h) qualified operator and safety officer and provision of documents,

(i) completion and submission of information log sheets and record sheets,

(j) vehicle inspections and submission of certificates,

(k) dealing with shed loads, broken down, accident damaged or abandoned vehicles and removal,

(l) explanatory leaflets and distribution,

(m) liaising with police,

(n) hardstandings, accommodation and servicing,

(o) locations and facilities for vehicle removal,

(p) removal of all plant, equipment, hardstandings, accommodation and locations and facilities for vehicle removal,

(q) vehicle inspection and report,

(r) lighting board,

(s) reinstatement.

After paragraph 55 add the following paragraphs 56 to 59 inclusive:

Mobilisation

Units

56 The unit of measurement shall be:

(i) mobilisation activity…….item.

Measurement

57 The maximum payment that may be made for mobilisation activities during Mobilisation Period 1 prior to the Commencement of Service Date 1 is £750,000 or 50% of the mobilisation total, whichever is lower.

The maximum payment that may be made for mobilisation activities during Mobilisation Period 2 prior to the Commencement of Service Date 2 is £300,000 or 20% of the mobilisation total, whichever is lower.

The maximum payment that may be made for mobilisation activities associated with Commencement of Service Date 1 undertaken after Commencement of Service Date 1 is £300,000 or 20% of the mobilisation total and will be made

in monthly payments following Commencement of Service Date 1 at a rate of 25% of this total per month.

The maximum payment that may be made for mobilisation activities associated with Commencement of Service Date 2 undertaken after Commencement of Service Date 2 is £150,000 or 10% of the mobilisation total and will be made in monthly payments following Commencement of Service Date 2 at a rate of 25% of this total per month.

Itemisation 58 Separate items shall be provided for mobilisation in accordance with Chapter II paragraphs 3 and 4 and the following:

Group	Feature	
I	*1*	Mobilisation activities associated with Commencement of Service Date 1.
	2	Mobilisation activities associated with Commencement of Service Date 2.

Mobilisation 59 The items for mobilisation shall in accordance with the Preambles to Schedule of Rates and Prices General Directions include for:

Item coverage	Mobilisation activities associated with Commencement of Service Date 1 (a) Provide the Quality Management System including the Quality Plan, (b) Provide Resources for Integrated Roads Information System, (c) Provide Record Referencing system and storage facilities, (d) Liaise with the previous Operating Company, FETA and Scottish Ministers and institute handover of historical records and records' registers, (e) Provide Customer Contact Services including carrying out all activities in relation to email, phone system, website, advertising signs and leaflets, (f) Provide Traffic Scotland IT and operational systems (g) Provide Central Office and facilities (to include the establishment of an interim Operating Company central office by the Operating Company), (h) Provide subordinate Offices, Depots and facilities, (i) Provide Winter Service Constructional Plant and resources, (j) Provide Incident Response resources, (k) Provide All Plans and procedures as required in the Contract, (l) Prepare Cyclic Maintenance Schedule for Management and Maintenance of Structures, (m) Provide vehicle and equipment resources for Incident Support Unit, (n) Provide all training for new staff and staff transferring from the Forth Estuary Transport Authority required to fullfill the requirements of this Contract, (o) Provide salt barn and facilities and access, (p) Provide and populate Bridge Management Database including server for Forth Road Bridge, (q) Procure software to create and analyse the structural analysis model for the Forth Road Bridge, (r) Populate Integrated Roads Information System with information provided on the Forth Road Bridge from the Scottish Ministers, (s) Provide health and safety training and Health Monitoring for Operating Company staff working on the Forth Road Bridge,

(t) Any other Mobilisation Services for Mobilisation Period 1 (to be listed by the Operating Company).

Mobilisation activities associated with Commencement of Service Date 2

(a) Populate Integrated Roads Information System and the defects management database with information provided by Scottish Ministers,
(b) Attend testing and commissioning and undertake training on monitoring, operation and maintenance of the SCADA, SHMS and all mechanical and electrical equipment on the Queensferry Crossing,
(c) Familiarisation and review of all as built and health and safety information for FRC Principal Contract,
(d) Undertake training on SHM and SCADA systems following Commencement of Service Date 2,
(e) Re-location and fitting out of the Forth Road Bridge control room equipment to the new Operating Company control room,
(f) Provide and fit out new Operating Company control room with monitoring equipment for the Forth Road Bridge,
(g) Procure software for the creation of a structural analysis model for the Queensferry Crossing,
(h) Undertake an inspection of the Queensferry Crossing following handover,
(i) Provide All Plans and procedures as Required in the Contract,
(j) Provide and Populate SQL-based Bridge Management Database for the Queensferry Crossing in accordance with Schedule 7: Part 7,
(k) Any other Mobilisation Services for Mobilisation Period 2 (to be listed by the Operating Company).

SCOTTISH MINISTERS' REQUIREMENTS

SCHEDULE 2 PART 1

METHOD OF MEASUREMENT

SERIES 200: SITE CLEARANCE

Site Clearance

Insert the following before paragraph 1:

Definitions

Delete all references to "tip" and replace with "licensed facility".

"licensed facility" means a licensed disposal facility or a licensed recycling facility.

Delete paragraphs 2 to 7 inclusive and insert the following paragraphs 2 to 5 inclusive:

Units

2 The units of measurement shall be:

(i) removing undergrowth ..... square metre,

(ii) removing hedges ..... linear metre.

Measurement

3 The measurement of removing undergrowth shall be the area to be cleared.

The height of hedges shall be measured from ground level.

Itemisation

4 Separate items shall be provided for Site clearance in accordance with Chapter II paragraphs 3 and 4 and the following:

Group	Feature	
I	1	Removing undergrowth.
	2	Removing hedges.

Site Clearance

5 The items for Site clearance shall in accordance with the Preambles to Schedule of Rates and Prices General Directions include for:

Item coverage

(a) demolition, breaking up and removal,

(b) in the case of removing undergrowth, felling trees not exceeding 500mm girth and grubbing up stumps not exceeding 160mm diameter,

(c) in the case of removing hedges, removing fencing and wires, felling trees not exceeding 500mm girth and grubbing up stumps not exceeding 160mm diameter,

(d) credit value of materials,

(e) disposal of material (as Series 600 paragraph 39),

(f) working around services,

(g) backfilling and compaction,

(h) making good to severed ends of existing fences, hedges and walls,

(i) disconnecting and sealing services,

(j) preservation of individual or groups of trees, shrubs, hedges and other features,

(k) reinstatement and making good,

(l) filling post and stump holes with acceptable material from any source and compaction,

(m) mechanical chipping of felled trees and saplings and spreading up to 25mm thick,

(n) treatment of hazardous materials,

(o) herbicide treatment.

Delete paragraph 8 and substitute the following:

Units

8 The units of measurement shall be:

Take up or down and set aside for re-use or remove to store or licensed facility the following:

(i) stonework ..... cubic metre,

(ii) paved areas and other similar hardstandings, ... square metre,

(iii) kerbs, channels, edgings, combined kerbs and channels, combined drainage and kerb blocks, fencing, safety barrier, pedestrian guardrail, parapets, parapet rails, and other similar features ..... linear metre,

(iv) road lighting columns, traffic signs, traffic sign posts, fence posts, safety barrier posts, parapet posts, parapet infill panels, sign lighting units, sign bracket arms, gates and stiles, reflecting road studs, feeder pillars, posts, brackets, and other similar features ..... number,

(v) chamber covers and frames and gully gratings and frames and other similar features ..... number,

(vii) quadrants ..... number,

(vi) individual blocks, features or ..... number.

Delete paragraph 9 and substitute the following:

Measurement

9 The measurement for take up or down and set aside for re-use or remove to store or licensed facility stonework, paved areas, kerbs, channels, edgings, combined kerbs and channels, combined drainage and kerb blocks, linear drainage channel systems, fencing, safety barrier, pedestrian guardrail, parapets, parapet rails and other similar features, road lighting columns, traffic sign faces, traffic sign posts, fence posts, safety barrier posts, parapet posts, sign lighting units, sign bracket arms, gates and stiles, reflecting road studs, feeder pillars, posts, brackets,

and other similar features, chamber covers and frames and gully gratings and frames and other similar features, individual blocks or features shall be the volumes, areas, lengths or numbers measured.

Take up or down and set aside for re-use or remove to store or licensed facility for fence posts, parapet posts and rails shall only be separately measured when they are a separate operation from the items take up or down and set aside for re-use or remove to store or licensed facility for fences and parapets.

The measurement of take up or down and set aside for re-use or remove to store or licensed facility for safety barrier shall not include the posts which are separately measured.

Delete paragraph 10 and substitute the following:

Itemisation

10 Separate items shall be provided for take up or down and set aside for re-use or remove to store or licensed facility in accordance with Chapter II paragraphs 3 and 4 and the following:

Group	Feature	
I	1	Take up or down and set aside for re-use or remove to store.
	2	Take up or down and remove to licensed facility.
II	1	stonework.
	2	Paved areas and other hardstandings.
	3	Kerbs, channels, edgings, combined kerbs and channels, combined drainage and kerb blocks, fencing, safety barrier, pedestrian guardrail, parapets, parapet rails and the like.
	4	Road lighting columns, traffic signs, traffic sign posts, fence posts, safety barrier posts, parapet posts, sign lighting units, sign bracket arms, gates and stiles, reflecting road studs and the like.
	5	feeder pillars, and the like.
	6	Chamber covers and frames and gully gratings and frames and the like.
	12	Individual blocks or features.
III	1	Any types and sizes.
	2	Any heights or mounting height.
IV	3	Different arrangements.

In paragraph 11 delete sub-paragraph (e) and replace with the following:

(e) cleaning, stacking, palletising, protecting and labelling.

Add the following sub-paragraph to paragraph 11:

(i) retrieval of displaced materials from their position after displacement (excluding fees to Network Rail).

SCOTTISH MINISTERS' REQUIREMENTS

SCHEDULE 2 PART 1

METHOD OF MEASUREMENT

SERIES 300: FENCING

Fencing, Gates and Stiles

Delete paragraphs 1, 2 and 3 and substitute the following:

Units

1 The units of measurement shall be:

(i) fencing, wire, wire mesh ..... linear metre,

(ii) gates, ... number,

Measurement

2 Temporary fencing shall not be measured.

The measurement of fencing shall be the developed length along the centre-line of the fence. The measurement of height of fencing shall be that stated in this Contract for the type of fence.

The measurement of wire and wire mesh shall be separately measurable where it is required by this Contract to be fixed to fencing, gates and the like, and shall be the developed length along the centre-line of the fence.

The measurement of width of gates shall be the distance between the outer edges of the stiles, the outer edges of hanging stiles in the case of double gates.

The measurement of height of gates shall be the distance between the upper surface of the top rail and the underside of the bottom rail.

Itemisation

3 Separate items shall be provided for fencing in accordance with Chapter II paragraphs 3 and 4 and the following:

Group	Feature	
I	1	Each type of fencing.
	2	Each type of wire to fencing, gates and the like.
	3	Each type of wire mesh to fencing, gates and the like.
	4	Each type of gate.
II	1	Fencing of different heights.
	2	Gates of different heights and widths.

Note 1: Group II feature 1 shall only apply to Group 1 feature 1.

Note 2: Group II feature 2 shall only apply to Group 1 feature 4.

Fencing 4

Item coverage

Add the following:

(y) removal of debris and other similar material on the line of the fencing.

After paragraph 16 add the following paragraphs 17 to 23 inclusive:

Repairs to Existing Fencing – Renew Components

Units

17 The units of measurement shall be:

(a) rails, wire, chain link, wire mesh .....……..... linear metre,

(b) posts and struts..... number.

Measurement

18 The measurement of renew rails, wire or mesh to existing fencing shall be the net length of rails, wire or mesh replaced.

The measurement of renew posts or struts to existing fencing shall be the number of posts or struts replaced.

Repairs to Existing Fencing – Renew Components shall not be used for replacement of complete fence.

Itemisation

19 Separate items shall be provided for repairs to existing fencing in accordance with Chapter II paragraphs 3 and 4 and the following:

Group	Feature	
I	1	Renew each type of rail or wire or mesh.
	2	Renew any type of post or strut.
II	1	Different types of post or strut.
III	1	Different types of wire or mesh.
	2	Different types of rail.

Note 1: Group II shall only apply to Group I feature 2.

Note 2: Group III shall only apply to Group I feature 1.

Note 3: Group IV shall only apply to Group I feature 2.

Renew Rails, Wire and Netting

20 The items for renew rails, wire and netting shall in accordance with the Preambles to Schedule of Rates and Prices General Directions include for:

Item coverage

(a) removal of existing fence rails, wire and netting,

(b) disposal of material (as Series 600 paragraph 39),

(c) removal of old fixings,

(d) dismantling and re-erection of existing fence to facilitate removal of components,

(e) fittings and fixings,

(f) trimming ground on line of fencing,

(g) protective system (as Series 1900 paragraph 4),

(h) preservation of timber.

Renew Posts and Struts

21 The items for renew posts and struts shall in accordance with the Preambles to Schedule of Rates and Prices General Directions include for:

Item coverage

(a) removal of existing posts and struts,

(b) removal of old fixings,

(c) dismantling and re-erection of existing fence to facilitate renewal of components,

(d) excavation of acceptable material (as Series 600 paragraphs 17 and 18),

(e) excavation of unacceptable material (as Series 600 paragraphs 19),

(f) breaking up foundations,

(g) disposal of material (as Series 600 paragraph 39),

(h) backfilling and compaction,

(i) fittings and fixings,

(j) protective system (as Series 1900 paragraph 4),

(k) preservation of timber,

(l) epoxy resin compound and mastic filler to posts fixed in sockets,

(m) concrete foundations to posts and struts.

SCOTTISH MINISTERS' REQUIREMENTS

SCHEDULE 2 PART 1

METHOD OF MEASUREMENT

SERIES 400: ROAD RESTRAINT SYSTEMS (VEHICLE AND PEDESTRIAN)

Safety Barriers and Transitions

Itemisation

4 In paragraph 4 delete Group V.

Delete Group III and replace with the following:

Group	Feature	
III	1	Each Working Width Class or range of Working Width classes.

In paragraph 5 delete (a) (f) and (h) and replace with the following:

Item coverage

5 (a) design, fabrication, installation, construction and testing,

(f) amendments to the Unit,

Terminals

Itemisation

8 In paragraph 8 delete Groups I to IV and replace with the following Groups I to III:

Group	Feature	
I	1	Terminal.
II	1	Each performance class.
III	1	Designed to be impacted on one side only.
	2	Designed to be impacted on both sides.

After paragraph 9 insert the following paragraphs 9A to 9D inclusive:

Reconstruction of Concrete Ramps at Terminal Section

Units

9A The units of measurement shall be:

(i) reconstruction of concrete ramps at terminal sections…….... number.

Measurement

9B The measurement of reconstruction of concrete ramps at terminal sections shall be the complete installation.

Itemisation

9C Separate items shall be provided for the reconstruction of concrete ramps in accordance with Chapter II paragraphs 3 and 4 and the following:

Group	Feature	
I	1	Reconstruction of concrete ramps at terminal sections.

Reconstruction of Concrete Ramps at Terminal Section

9D The items for reconstruction of concrete ramps at terminal sections shall in accordance with the Preambles to Schedule of Rates and Prices General Directions include for:

Item coverage

(a) break out existing concrete ramp and disposal of material,

(b) cut off and drill out, grout in place new reinforcing rods,

(c) design,

(d) provision of design calculations and details to the Overseeing Organisation for acceptance,

(e) reports, certificates,

(f) provision of data and drawings,

(g) re-submissions and modifications,

(h) amendments to the work,

(i) obtaining approvals,

(j) everything necessary for the design, fabrication, installation and testing of the work.

Connections to Existing Systems

Itemisation

12 In paragraph 12 delete Groups III and IV.

Vehicle Parapets

In paragraph 18 add the following:

Units

18 (ii) infill panel……square metre.

After paragraph 19 insert the following paragraph 19A:

Measurement

19A Where infill is required to vehicle parapets it shall be separately measured.

The measurement of infill shall be the developed length along the centre-line of the infill multiplied by the height of the infill.

Itemisation

20 In paragraph 20 delete Groups III, V and VI and add the following:

Group	Feature	
I	2	Infill panel to vehicle parapet.
III	1	Each Working Width Class or range of Working Width Class.
V	1	Class of infill panel.
VI	1	Type of infill panel.

Note 1: Group II, III and IV features shall only be applied to Group I feature 1 vehicle parapet.

Note 2: Group V and VI features shall only be applied to Group I feature 2 infill panel to vehicle parapet.

Pedestrian Parapets and Pedestrian Guardrails

Units 23 In paragraph 23 add the following:

(ii) infill panel……square metre.

After paragraph 24 insert the following paragraph 24A:

Measurement 24A Where infill is required to pedestrian parapets it shall be separately measured.

The measurement of infill shall be the developed length along the centre-line of the infill multiplied by the height of the infill.

Itemisation 25 In paragraph 25 delete Groups IV, V and VI and add the following:

Group	Feature	
I	3	Infill panel to pedestrian parapet.
IV	1	Class of infill panel.
V	1	Type of infill panel.

Delete Notes 1 and 2 and replace with the following:

Note 1: Group II and III features shall only apply to Group I features 1 and 2.

Note 2: Group IV and V features shall only be applied to Group I feature 3.

Delete paragraph 36 and substitute the following:

Itemisation 36 Separate items shall be provided for remove from store or from where previously set aside and re-erect safety barrier in accordance with Chapter II paragraphs 3 and 4 and the following:

Group	Feature	
I	1	Single-sided safety beam.
	2	Double-sided safety beam.
	3	Driven post.
	4	Long driven post.
	5	Post for setting in concrete or socket.

After paragraph 41 add the following paragraphs 41A.

Remove from Store and Re-erect Posts 41A The items for remove from store and re-erect posts shall in accordance with the Preambles to Schedule of Rates and Prices General Directions include for:

Item Coverage

(a) loading, transporting from store, unloading and positioning for re-erection,

(b) replacing items damaged during the foregoing operations,

(c) modification and new materials,

(d) making good to protective system,

(e) fabrication (as Series 1800 paragraph 6),

(f) protective system (as Series 1900 paragraph 4),

(g) driving in any material,

(h) fixing to structures including attachment systems,

(i) post caps, excluders, hooks and fittings,

(j) drilling or foaming holes and pockets and casting in bolts, base plates and anchorage assemblies,

(k) bedding,

(l) filling,

(m) making good protective system,

(n) facilities for proof loading.

After paragraph 47 add the following paragraphs 48 to 57 inclusive:

Repairs to Safety Barriers, Vehicle Parapets, Pedestrian Parapets and Pedestrian Guardrails

Definition

48 Repairs to safety barriers, vehicle parapets, pedestrian parapets and pedestrian guardrails shall be the complete replacement of the whole of the damaged apparatus and shall include posts and rails.

49 The measurement of repairs to safety barriers, vehicle parapets, pedestrian parapets and pedestrian guardrails shall be as follows:

(i) take up or down and remove to licensed facility (measured in Series 200 Site Clearance) for any components that cannot be re-used,

(ii) take up or down and set aside or remove to store (measured in Series 200 Site Clearance) for any components that can be re-used,

(iii) remove from store and re-erect (measured as this Series paragraphs 31 to 40) for any components that can be reused,

(iv) remove from store and re-erect (measured as this Series paragraphs 31 to 41N) for any components that are available in store,

(v) invoiced costs of materials measured in accordance with Series 6500,

(vi) percentage to be added to the basic cost of materials invoiced costs.

Painting of Safety Barriers, Vehicle Parapets and Pedestrian Parapets

Units

50 The unit of measurement shall be:

(i) painting of Safety Barriers, Vehicle Parapets , and Pedestrian Parapets ..... linear metre.

Measurement

51 The measurement of painting of Safety Barriers, Vehicle Parapets and Pedestrian Parapets, shall be the developed length along the centre-line of the units.

Painting of Safety Barriers, Vehicle Parapets and Pedestrian Parapets shall only be measured when painting in excess of the protective system is required.

Itemisation

52 Separate items shall be provided for Painting of Safety Barriers, Vehicle Parapets and Pedestrian Parapets in accordance with Chapter II paragraphs 3 and 4 and the following:

Group	Feature	
I	1	Painting of safety barrier.
	2	Painting of vehicle parapets.
	3	Painting of pedestrian parapets.

Painting of Safety Barriers, Vehicle Parapets and Pedestrian Parapets

53 The items for painting of Safety Barriers, Vehicle Parapets and Pedestrian Parapets shall in accordance with the Preambles to Schedule of Rates and Prices General Directions include for:

Item coverage

(a) protection of steelwork against corrosion (as Series 1900 paragraph 4),

(b) painting of all components.

Temporary Safety Barriers

Units

54 The units of measurement shall be:

(i) temporary safety barrier ……..... metre.

Measurement

55 The measurement of temporary safety barrier shall be the developed length along the centre-line of the temporary safety barrier including terminal sections.

Temporary safety barrier shall only be measured where the temporary safety barrier is acting as a permanent parapet. All other temporary safety barrier shall not be measured.

Itemisation

56 Separate items shall be provided for temporary safety barriers in accordance with Chapter II paragraphs 3 and 4 and the following:

Group	Feature	
I	1	Temporary Safety Barrier.
II	1	Each containment performance class.
III	1	Each Working Width Class or range of Working Width Classes.

Temporary Safety Barriers

57 The items for temporary safety barriers shall in accordance with the Preambles to Schedule of Rates and Prices General Directions include for:

Item coverage

(a) safety barriers and transitions (as this Series paragraph 5),

(b) terminals (as this Series paragraph 9),

(c) dismantling, loading, transporting removal and unloading,

(d) maintenance, which includes for all time-related costs associated with keeping the temporary safety barrier in both condition and position.

Replacement of Central and Side Vehicle Barriers on Forth Road Bridge

Units

58 The unit of measurement shall be:

(i) replacement of central and side vehicle barriers on Forth Road Bridge ..... linear metre.

Measurement

59 The measurement shall be the length of central and side vehicle barriers on Forth Road Bridge replaced.

Itemisation

60 Separate items shall be provided for replacement of central and side vehicle barriers on Forth Road Bridge in accordance with Chapter II paragraphs 3 and 4 and the following:

Group	Feature	
I	1	Replacement of central and side gratings on Forth Road Bridge.

Replacement of Central and Side vehicle barriers on Forth Road Bridge

The items for replacement of central and side vehicle barriers on Forth Road Bridge shall in accordance with the Preambles to Schedule of Rates and Prices General Directions include for:

(a) removal of existing barriers,

(b) disposal of existing barriers,

(c) fabrication of new section of vehicle barriers (as series 1800 paragraph 6),

(d) protective system to vehicle barrier (as series 1900 paragraph 4),

(e) making good ends of adjacent sections of barrier,

(f) loading, transporting, unloading, positioning and erection,

(g) connecting to structure and adjacent vehicle barrier units.

SCOTTISH MINISTERS' REQUIREMENTS

SCHEDULE 2 PART 1

METHOD OF MEASUREMENT

SERIES 500: DRAINAGE AND SERVICE DUCTS

Drains and Service Ducts (Excluding Filter Drains, Narrow Filter Drains and Fin Drains)

Units 9 Add the following sub paragraphs:

(ii) extra over drain for concrete bed and surround (bed Type Z) ……metre,

(iii) extra over drain in trench for backfilling with concrete ……cubic metre.

Itemisation 15 In paragraph 15 delete group VI, add the following:

Group	Feature	
I	3	Extra over drain for concrete bed and surround (bed Type Z).
	4	Extra over drain or service duct for backfilling with concrete to underside of pavement.

Insert "1" after "Note".

Add the following:

Note 2: Itemisation for drains includes compliance with any Groups, materials and bed types for the stated depths, excluding bed type Z which will be measured as extra over.

Note 3: Groups II, IV and V shall not apply to Group I features 3 and 4.

Filter Drains

In paragraph 17 add the following:

Units 17 (v) renew geotextile membrane to replaced filter material..... square metre.

Measurement 20 In paragraph 20 delete the last paragraph and add the following:

The measurement of excavate and replace filter material shall include contiguous filter material between the filter drain and the adjacent carriageway, hardshoulder and hardstrip.

The measurement of excavate and replace filter material excluding contiguous filter material shall be the product of the lengths, widths and depths ordered with no deduction for pipes, ducts or chambers. Lengths and widths for filter drains shall be taken as the lengths and widths at the level

of the drain invert or, in the case that partial excavation is ordered, at the depth to which excavation is ordered.

The widths of excavate and replace contiguous filter material shall be between the side of the contiguous filter material next to the filter drain which shall be taken as the vertical extension of the side at the level of the drain invert or, in the case of partial excavation, at the depth to which excavation is ordered and the adjacent carriageway, hardshoulder and hardstrip. The depth of the contiguous filter material next to the filter drain shall be taken above capping or where no capping is provided above subgrade level. Where the filter material is covered with red chippings the top surface of the excavate and replace filter material shall be the underside of the red chippings.

Itemisation 21 In paragraph 21 add the following Feature 6 to Group I and delete group V:

Group	Feature	
I	6	Renew geotextile membrane to replaced filter material.

Delete paragraph 24 and replace with the following:

Excavate and Replace Filter Material 24 The items for excavate and replace filter material shall in accordance with the Preambles to Schedule of Rates and Prices General Directions include for:

Item coverage

(a) filter drains (as this Series paragraph 22), excluding geotextile membrane,

(b) cleaning and replacing excavated filter material,

(c) new and recycled filter material.

After paragraph 24 add the following paragraph 24A:

Renew Geotextile Membrane to Replaced Filter Material 24A The items for renew geotextile membrane to replaced filter material shall in accordance with the Preambles to Schedule of Rates and Prices General Directions include for:

Item coverage

(a) regulating and preparing surfaces,

(b) laps,

(c) measures to protect material,

(d) cutting, jointing, and fixing.

Renewal, Raising or Lowering of Covers and Gratings on Existing Chambers and Gullies

Itemisation 63 In paragraph 63 delete group I to VI and add the following:

Group	Feature	
I	1	Renewal.
	2	Raising or lowering the level.
II	1	Area not exceeding 0.40 square metres.

III	1	Not exceeding 150 mm.
	2	Exceeding 150 mm but not exceeding 300 mm.

In paragraph 64 add the following:

Item coverage

(u) paving material infilling to covers.

After paragraph 80 add the following paragraphs 80A to 80D inclusive:

Protection of Existing Sewer, Drain or Service Duct

Units

80A The unit of measurement shall be:

(i) protection of existing sewer, drain or service duct …….. linear metre.

Measurement

80B The measurement of protection shall be the individual lengths of sewer, drain or service duct to be protected.

Itemisation

80C Separate items shall be provided for protection of existing sewer, drain or service duct in accordance with Chapter II paragraphs 3 and 4 and the following:

Group	Feature	
I	1	Different widths.
II	1	Different types of protection.

Protection of Existing Sewer, Drain or Service Duct

80D The items for protection of existing sewer, drain or service duct shall in accordance with the Preambles to Schedule of Rates and Prices General Directions include for:

(a) concrete (as Series 1700 paragraphs 5 and 10),

(b) formwork (as Series 1700 paragraph 15),

(c) reinforcement (as Series 1700 paragraph 26),

(d) bedding and compaction,

(e) fabric reinforcement.

After paragraph 84 add the following paragraphs 85 to 93 inclusive:

Drain Surveys

Units

85 The unit of measurement shall be:

(i) drain survey …….. kilometre.

Measurement

86 The measurement of drain survey shall be the length of carriageway.

Itemisation

87 Separate items shall be provided for drain surveys in accordance with Chapter II paragraphs 3 and 4 and the following:

Group	Feature	
I	1	Drain survey.

		II	1 Type 1.
			2 Type 3.

Drain Survey Type 1	88	The items for drain survey Type 1 shall in accordance with the Preambles to Schedule of Rates and Prices General Directions include for:
Item coverage		(a) carrying out desk study using available data, (b) locating chambers, pump chambers, balancing ponds, penstocks, flap valves, headwalls, outfalls, and the like, (c) recording, (d) reporting.
Drain Survey Type 3	89	The items for drain survey Type 3 shall in accordance with the Preambles to Schedule of Rates and Prices General Directions include for:
Item coverage		(a) locating chambers, pump chambers, balancing ponds, penstocks, flap valves, headwalls, outfalls, and the like, (b) removing and reinstalling covers and gratings, (c) measuring pipe sizes, (d) measuring invert level of pipes, (e) condition survey, (f) recording, (g) reporting.
	Closed Circuit Television Drain Surveys	
Units	90	The units of measurement shall be: (i) setting up closed circuit television equipment for drain survey …..... number, (ii) closed circuit television drain survey..... linear metre.
Measurement	91	The measurement of setting up closed circuit television equipment for drain survey shall be the number of chambers at which the equipment is set up. Any additional setting up of equipment for drain survey to suit the Operating Company's method of working shall not be measured. The measurement of drain survey by closed circuit television camera shall be the length measured along the centre-lines of the pipes between any of the following: (a) the external faces of chambers, gullies or headwalls, (b) the intersection of the centre-lines at pipe junctions, (c) the position of any known terminations.

Itemisation

92 Separate items shall be provided for closed circuit television surveys in accordance with Chapter II paragraphs 3 and 4 and the following:

Group	Feature	
I	1	Setting up closed circuit television equipment for drain survey.
	2	Closed circuit television drain survey.
II	1	All diameters

Note: Group II shall only apply to Group I feature 2.

Closed Circuit Television Drain Surveys

93 The items for closed circuit television drain surveys shall in accordance with the Preambles to Schedule of Rates and Prices General Directions include for:

Item coverage

(a) locating chambers, pump chambers, balancing ponds, penstocks, flap valves, headwalls, outfalls, and the like,

(b) removing and reinstalling covers and gratings,

(c) moving and setting up closed circuit television camera equipment,

(d) inserting equipment into drains,

(e) water supply,

(f) recording,

(g) identification of locations recorded,

(h) picture quality tests and linear measurement checks,

(i) reporting.

SCOTTISH MINISTERS' REQUIREMENTS

SCHEDULE 2 PART 1

METHOD OF MEASUREMENT

SERIES 600: EARTHWORKS

Excavation

Itemisation 16

In paragraph 16 replace Groups and Features with the following:

Group	Features	
I	1	Excavation.
II	1	Acceptable material Class 5A.
	2	Acceptable material excluding Class 5A.
	3	Unacceptable material Class U1A or U1B.
	4	Unacceptable material Class U2.

Delete Note 2.

In paragraph 18 add the following:

Excavation in Hard Material

Item coverage 18

(w) completion of formation and sub-formation.

In paragraph 22 replace Group II with the following:

Group	Features	
II	1	In ditches or watercourses.
	2	In all other locations.

In paragraph 23 add the following:

Item coverage 23

(f) completion of formation and sub-formation.

Deposition of Fill

Itemisation 32

In paragraph 32 replace Group III with the following:

Group	Features	
III	1	To any Location.

Disposal of Material

Itemisation 38 In paragraph 38 replace Group II with the following:

Group	Features	
II	1	Acceptable material Class 5A.
	2	Acceptable material excluding Class 5A.
	3	Unacceptable material Class U1A or U1B.
	4	Unacceptable material Class U2.

Imported Fill

Itemisation 44 In paragraph 44 replace Groups and Features with the following:

Group	Feature	
I	1	Imported acceptable material.
	2	Imported topsoil Class 5B.
II	1	Any location.

Compaction of Fill

Itemisation 51 In paragraph 51 replace Group III with the following:

Group	Feature	
III	1	Any location.

Soft Spots and Other Voids

Itemisation 63 In paragraph 63 replace Group II with the following:

Group	Feature	
II	1	Any location.

Topsoiling and Storage of Topsoil

Itemisation 79 In paragraph 79 delete Group II and Note.

Completion of Formation and Sub-formation

84 & 85 Delete paragraphs 84 and 85.

Lining of Watercourses

Itemisation 88 In paragraph 88 replace Group II as follows:

Group	Feature	
II	1	To inverts or side slopes.

Trial Pits

Itemisation 168 In paragraph 168 replace Group II with the following:

Group	Feature	
II	1	0 metres to 1.5 metres in depth.

Siding out of Carriageways, Footways and Paved Areas

Units 178 The units of measurement shall be:

(i) siding out of carriageways, footways and paved areas ..... linear metre.

Measurement 179 The measurement of siding out of carriageways, footways and paved areas shall be the length along the cut edge.

No deduction shall be made for gaps within the length of 2 metres or less.

Itemisation 180 Separate items shall be provided for siding out of carriageways, footways and paved areas in accordance with Chapter II paragraphs 3 and 4 and the following:

Group	Feature	
I	1	Siding out of carriageways.
	2	Siding out of footways and paved areas.

Siding out of Carriageways, Footways and Paved Areas 181 The items for siding out of carriageways, footways and paved areas shall in accordance with the Preamble to Schedule of Rates and Prices General Directions include for:

Item coverage

(a) programming the work in advance of any other operation at the Site,

(b) breaking up and removal of hardened dirt areas,

(c) prevention of damage to existing carriageways, footways and paved areas,

(d) disposal of material by spreading and levelling on verge or disposal of material (as Series 600 paragraph 39),

(e) trimming of edges to a neat line,

(f) leaving carriageway, footway and verge clear of debris.

SCOTTISH MINISTERS' REQUIREMENTS

SCHEDULE 2 PART 1

METHOD OF MEASUREMENT

SERIES 700: PAVEMENTS

Sub-base

In paragraph 4 delete Group II.

Pavement

Definition

Before paragraph 7 insert the following paragraph 6A:

6A Pavement course described as "base/binder" shall be deemed to be base course for measurement purposes.

In paragraph 7 delete the first sub-paragraph and substitute the following:

7 The measurement of base, lower base, upper base, binder course, surface course concrete slab, adjustment for each 5mm variation above or below the stated thickness, adjustment for alternative PSV and adjustment for alternative AAV on Surface Course shall be calculated using the width of the top surface of the course or slab.

After the last sub-paragraph of paragraph 7, insert the following sub-paragraphs:

(i) When base course is 150mm or less total thickness it shall be measured as a single layer of base course 100mm thick with +/- adjustments for each 5mm thickness increment where applicable.

(ii) When base course is greater than 150mm but not exceeding 250mm total thickness it shall be measured as two layers of base course with +/- adjustments for each 5mm thickness increment where applicable.

(iii) When base course is greater than 250mm but not exceeding 350mm total thickness it shall be measured as three layers of base course with +/- adjustments for each 5mm thickness increment where applicable.

(iv) When binder course is 90mm or less total thickness it shall be measured as a single layer of binder course 60mm thick with +/- adjustments for each 5mm thickness increment where applicable.

(v) When binder course is greater than 90mm but not exceeding 150mm total thickness it shall be measured as two layers of binder course with +/- adjustments for each 5mm thickness increment where applicable.

In paragraph 8:

Add to Group II the following features:

Group	Feature	
II	7	Adjustment for each 5mm variation above or below the stated thickness.
	8	Adjustment for alternative PSV on Surface Course.
	9	Adjustment for alternative AAV on Surface Course.

Delete Groups VI and VII and replace with the following:

Group	Feature	
VI	1	Each Type to which the adjustment applies.
VII	1	Each thickness to which the adjustment applies.
VIII	1	Each alternative PSV.
IX	1	Each alternative AAV.

Note 1: Groups III, IV and V shall only apply to Group II features 1 to 6.

Note 2: Group VI shall only apply to Group II features 7, 8 and 9.

Note 3: Group VII shall only apply to Group II feature 7.

Note 4: Group VIII shall only apply to Group II feature 8.

Note 5: Group IX shall only apply to Group II feature 9.

Base, Lower Base, Upper Base, Binder Course, Surface Course and Concrete Slab

Item coverage

9 Delete (aa) and replace with the following:

(aa) slurry sealing, surface dressing, bituminous spray, resin based treatment and tack coat.

Add the following after (ee):

(ff) removing loose material and water,

(gg) forming joints and sealing.

Add the following after paragraph 9:

Adjustment for each 5mm variation above or below the stated thickness, Adjustment for alternative PSV on Surface Course and Adjustment for alternative AAV on Surface Course

9A The items for the adjustment for each 5mm variation above or below the stated thickness and alternative PSV on Surface Course and alternative AAV on Surface Course shall in accordance with the Preambles to Schedule of Rates and Prices General Directions include for:

Item coverage

(a) Base, Lower Base, Upper Base, Binder Course, Surface Course and Concrete Slab (as this Series paragraph 9).

Surface Treatment

19 Add the following:

Item coverage

(f) different colours.

Tack Coat

Delete paragraph 22 and substitute the following:

22 Tack coat shall not be separately measured except where an Item description has been included in Schedule 2 Part2.

Reinstatement of Carriageway, Hardshoulder, Emergency Crossing, Hardstrip, Lay-by or Bus bay and Paved Areas

Itemisation

35 In paragraph 35 delete Group II and replace with the following:

Group	Feature	
II	1	In carriageway, hardshoulder, emergency crossing, hardstrip, lay-by or bus bay.
	2	In footway or paved area.
III	1	Not exceeding 150mm total thickness.
	2	Over 150mm but not exceeding 300mm total thickness and so on in stages of 150mm.

Reinstatement of Carriageway, Hardshoulder, Emergency Crossing, Hardstrip, Lay-by or Bus bay and Paved Area

36 In paragraph 36 add the following:

Item coverage

(m) excavation (as Series 600 paragraphs 17, 18, 19 and 23),

(n) disposal of material (as Series 600, paragraph 39).

Itemisation

42 In paragraph 42 delete Groups III and IV.

Repairs and Patching to Carriageways

Delete paragraphs 77 to 81 and replace with the following paragraphs 77 to 86 inclusive:

Measurement

77 Measurement of:

(i) permanent repairs to Category 1 Defects exceeding £10,000, and

(ii) patching to carriageways,

shall be in accordance with Series 600 and this Series paragraphs 1 to 28 inclusive.

Pavement Reinforcement

Units

78 The units of measurement shall be:

(i) pavement reinforcement…..... square metre.

Measurement

79 The measurement of pavement reinforcement shall be the area of the reinforcement.

80 No deductions shall be made for openings of 1 square metre or less.

Itemisation

81 Separate items shall be provided for pavement reinforcement in accordance with Chapter II paragraphs 3 and 4 and the following:

Group	Feature	
I	1	Pavement reinforcement.

Pavement Reinforcement

82 The items for pavement reinforcement shall in accordance with Preambles to Schedule of Rates and Prices General Directions include for:

Item coverage

(a) cleaning, trimming, regulating and preparing surfaces,

(b) laps,

(c) measures to protect material,

(d) cutting, jointing, sealing and fixing,

(e) securing material in place,

(f) tensioning of reinforcement,

(g) tack coat (as this Series paragraph 24).

Grip Testing

Units

83 The units of measurement shall be:

(i) grip testing..... km.

Measurement

84 Each carriageway lane tested shall be separately measured. The measurement shall be computed net to the nearest whole number.

Itemisation

85 Separate items shall be provided for grip testing in accordance with Chapter II paragraphs 3 and 4 and the following:

Group	Feature	
I	1	Grip testing.

Grip Testing

86 The items for grip testing shall in accordance with Preambles to Schedule of Rates and Prices General Directions include for:

Item Coverage

(a) calibration checks,

(b) pre-survey,

(c) testing each section twice where required,

(d) multiple and repeat testing,

(e) recording of GPS data,

(f) reporting.

Overband Sealing

Units

87 The units of measurement shall be:

(i) overband sealing of cracks and joints in pavements ..... linear metre.

Itemisation

88 Separate items shall be provided for overband sealing of cracks and joints in pavements in accordance with Chapter II
paragraphs 3 and 4 and the following:

Group	Feature	
I	1	Overband sealing of cracks in pavements.
	2	Overband sealing of joints in pavements.

Overband Sealing of Cracks and Joints in Pavements

89 The items for overband sealing of cracks and joints in pavements shall in accordance with Preambles to Schedule of Rates and Prices General Directions include for:

Item coverage

a) cleaning and drying of cracks and joints,

(b) filling and sealing of cracks and joints,

(c) removal of all debris and materials from cracks and joints,

(d) disposal of material (as Series 600 paragraph 39).

Hand laid Mastic Asphalt on Forth Road Bridge

Units

90 The units of measurement shall be:

(i) hand laid mastic asphalt surface course on Forth Road Bridge.....square metre.

Itemisation

91 Separate items shall be provided for hand laid mastic asphalt on Forth Road Bridge to surface course in accordance with Chapter II
paragraphs 3 and 4 and the following:

Group	Feature	
I	1	In carriageway on Forth Road Bridge on main spans to the specified thickness.
	2	In carriageway on Forth Road Bridge on concrete deck on viaducts.
	3	In carriageway on Forth Road Bridge side spans to the specified thickness.

Hand laid Mastic Asphalt on Forth Road Bridge

92 The items for hand laid mastic asphalt on Forth Road Bridge shall in accordance with Preambles to Schedule of Rates and Prices General Directions include for:

Item coverage

(a) trial areas and trials,
(b) making good after sampling and testing,
(c) protection of material in transit and while awaiting tipping,
(d) designing and verifying mixes,
(e) grading, measuring, reclaiming, mixing and depositing materials,
(f) spreading and compaction,
(g) cutting back, saw cutting, cleaning, preparing and working on or up to existing surfaces and features,
(h) edge support,
(i) waterproof and separation membranes,
(j) surface texturing,
(k) making joints,
(l) forming or sawing grooves, cleaning, grit blasting, priming, caulking, temporary and permanent sealing of joints,
(m) hand spreading,
(n) shaping to cambers, falls and crowns,
(o) forming sockets, recesses, openings, and bays,
(p) curing and protection,
(q) protection and masking and unmasking of kerbs, drainage channels, chamber covers, gully gratings, expansion joints, and the like,
(r) maintenance of surface,
(s) taking measures to protect and maintain the pavement from deterioration by the use of constructional plant and the ingress of water and other materials,
(t) melding the mastic asphalt into any existing surfacing material on top of the waterproofing,

(u) measures required for aftercare and opening the road to traffic,
(v) slurry sealing, surface dressing, bituminous spray, resin based treatment and tack coat forming integral part of the pavement,
(w) admixtures and additives.

Removal of surfacing on Forth Road Bridge

Units

93 The units of measurement shall be:

(i) removal of surfacing on Forth Road Bridge.....square metre.

Itemisation

94 Separate items shall be provided for removal of surfacing on Forth Road Bridge in accordance with Chapter II paragraphs 3 and 4 and the following:

Group	Feature	
I	1	removal of surfacing on concrete deck on side spans.
	2	removal of surfacing on steel deck on main span.
	3	Removal of surfacing on concrete deck on viaducts.

Removal of surfacing

95 The items for removal of surfacing on Forth Road Bridge shall in accordance with Preambles to Schedule of Rates and Prices General Directions include for:

Item coverage

(a) shaping to cambers, falls and crowns,
(b) removal of the existing surfacing material above the existing waterproofing system including all unsound or cracked material,
(c) multiple handling of material,
(d) loading into transport,
(e) disposal of material (as Series 600 paragraph 39),
(f) working around drainage channels, chamber covers, gully gratings,
(g) expansion joints and the like,
(h) Ramps,
(i) taking all protective measures to avoid damage to the deck plate,
(j) taking all protective measures to avoid damage to the concrete deck
(k) taking all protective measures to avoid damage to the waterproofing system.

SCOTTISH MINISTERS' REQUIREMENTS

SCHEDULE 2 PART 1

METHOD OF MEASUREMENT

SERIES 1100: KERBS, FOOTWAYS AND PAVED AREAS

Kerbs, Channels, Edgings, Combined Kerbs and Channels, Combined Drainage and Kerb Blocks, and Linear Drainage Channel Systems

Itemisation

3 In paragraph 3 delete Group III.

Delete paragraphs 13 to 22 and insert the following paragraphs 13 to 17 inclusive:

Footways and Paved Areas

Units

13 The units of measurement shall be:

(i) bituminous material, in-situ concrete paving, precast concrete paving and lean mix …… square metre,

(ii) sub-base …… cubic metre.

Measurement

14 The measurement of footways and paved areas shall be the area of the top surface of the layer.

15 No deduction shall be made for openings of 1 square metre or less.

Itemisation

16 Separate items shall be provided for footways and paved areas in accordance with Chapter II paragraphs 3 and 4 and the following:

Group	Feature	
I	1	Bituminous material layer.
	2	In-situ concrete layer.
	3	Precast concrete layer.
	4	Lean mix concrete layer.
	5	Sub-base layer.
	6	Stone chippings layer.
II	1	Different materials.
III	1	Different thicknesses.
		Note: Group III feature 1 shall not apply to Group I feature 5.

Footways and Paved Areas

17 The items for footways and paved areas shall in accordance with the Preambles to Schedule of Rates and Prices General Directions include for:

Item coverage

(a) edge support,

(b) concrete (as Series 1700 paragraphs 5 and 10),

(c) formwork (as Series 1700 paragraph 15),

(d) void formers (as Series 1700 paragraph 16),

(e) working round obstructions,

(f) reinforcement (as Series 1700 paragraph 26),

(g) joint filler and sealant (as Series 2300 paragraphs 9 and 10),

(h) mortar and sand beds,

(i) surface finishes,

(j) trial mixes,

(k) regulating, laying to levels and falls,

(l) bedding, laying course, jointing and pointing,

(m) straight, circular and radial cutting and fitting,

(n) rough and fair cutting and fitting,

(o) not used,

(p) not used,

(q) compacting,

(r) membrane,

(s) topsoiling (as Series 600 paragraph 80),

(t) grass seeding (as Series 3000 paragraph 9),

(u) compliance with Series 700 paragraph 5,

(v) compliance with Series 700 paragraph 9.

Delete paragraphs 23 to 29 inclusive and substitute the following paragraphs 23 to 29 inclusive:

Remove from Store or from where previously Set Aside and Relay Paving Flags and Blocks

Units

23 The unit of measurement shall be:

(i) remove from store and relay paving flags and blocks ……..... square metre.

Measurement

24 The measurement of remove from store and relay paving flags and blocks shall be the area of the top surface of the work.

No deduction shall be made for openings of 1 square metre or less.

25 Separate items shall be provided for remove from store and relay paving flags and blocks in accordance with Chapter II paragraphs 3 and 4 and the following:

Group	Feature	
I	1	Remove from store or where previously set aside and relay paving in footways and paved areas.
II	1	Different materials.

Remove from Store and Relay Paving Flags and Blocks

The items for remove from store and relay paving flags and blocks shall in accordance with the Preambles to Schedule of Rates and Prices General Directions include for:

Item coverage

26 (a) loading, transporting from store or from where previously set aside, unloading and positioning for relaying,

(b) replacing items damaged during the foregoing operations,

(c) modification and new materials,

(d) footways and paved areas (as this Series paragraph 18).

Cold Milling (Planing)

34 The units, measurement, itemisation and item coverage for cold milling (planing) shall be as Series 700 paragraphs 25 to 28 inclusive.

Reinstatement of Paved Areas

35 The units, measurement, itemisation and item coverage for reinstatement of paved areas shall be as Series 700 paragraphs 33 to 36 inclusive.

Patching of Footways and Paved Areas

Definition

36 Patching covers the replacement of surfacing materials in any number of individual areas of not exceeding 5 square metres.

Units

37 The unit of measurement shall be:

(i) patching, ... square metre.

Measurement

38 The measurement of patching shall be the area of the top surface of the patch.

Where several patches are in a single Scheme the measurement shall be the summated area of all the patches in that Scheme.

Itemisation

39 Separate items shall be provided for patching in accordance with Chapter II paragraphs 3 and 4 and the following:

Group	Feature	
I	1	Patching in existing footway or paved area.
II	1	Surface course.
	2	Binder course.
III	1	Different thicknesses.

Patching of Footways and Paved Areas

40 The items for patching of footways and paved areas shall in accordance with the Preambles to Schedule of Rates and Prices General Directions include for:

Item coverage

(a) excavation (as Series 600 paragraphs 17, 18, 19 and 23),

(b) breaking out each course of existing pavement to defined depths and lines, stepped back between successive courses,

(c) milling (as this Series paragraph 35),

(d) disposal of material (as Series 600 paragraph 39),

(e) trimming and protecting vertical edges,

(f) making good up to adjacent courses, cleaning and painting with bitumen,

(g) regulating,

(h) temporary and permanent reinstatement (as Series paragraph 36),

(i) tack coat (as Series 700 paragraph 24),

(j) all of the above if the patching fails within 12 months.

SCOTTISH MINISTERS' REQUIREMENTS

SCHEDULE 2 PART 1

METHOD OF MEASUREMENT

SERIES 1200: TRAFFIC SIGNS AND ROAD MARKINGS

Delete heading "Traffic Signs" and replace with:

Traffic Signs Faces

Delete paragraph 1 to 5 and replace with the following paragraphs 1 to 5P inclusive:

Units

1 The unit of measurement shall be:

(i) traffic sign faces……..square metre.

(ii) extra over traffic sign faces for dew resistant sheeting……..square metre.

Measurement

2 The measurement of traffic sign faces shall be the surface area of the sign.

Itemisation

3 Separate items shall be provided for traffic signs faces in accordance with Chapter II paragraphs 3 and 4 and the following:

Group	Feature	
I	1	Permanent traffic sign faces.
	2	Extra over traffic sign faces for dew resistant sheeting.
II		
	1	Microprismatic Grade retroreflective.
III	1	Sign face not exceeding 0.50 square metres in area.
	2	Sign face exceeding 0.5 but not exceeding 1.0 square metres in area.
	3	Sign face exceeding 1.0 but not exceeding 2.0 square metres in area.
	4	Sign face exceeding 2.0 but not exceeding 5.0 square metres in area.
	5	Sign face exceeding 5.0 square metres in area.

Traffic Sign Faces

4 The items for traffic sign faces shall in accordance with the Preambles to Schedule of Rates and Prices General Directions include for:

Item coverage

(a) covering and removal of coverings of signs,

(b) location lettering and marking,

(c) drilling or forming holes and pockets in Structures or lighting columns and casting in bolts, sockets and anchorage assemblies,

(d) sign plates,

(e) rivets, bolts nuts and other fastenings,

(f) purlins and fixings,

(g) protective treatment,

(h) notices and recording,

(i) preparation and supply of record drawings,

(j) fixing to Structures including attachment systems and additional materials for hinges.

Passively Safe Traffic Sign Posts

Definitions

'Passively safe traffic sign posts' refers to posts compliant with BS EN 12767.

Units

5 The unit of measurement shall be:

i) passively safe traffic sign posts…….linear metre,

ii) extra over for electrical housing……..number.

Measurement

5A The measurement of Passively Safe Traffic Sign Posts shall be the complete installation.

'Cross-sectional area' shall be measured as:

1 For triangular and quadrilateral profiles the cross-sectional area shall be the external area of the triangle or quadrilateral.

2 For all other profiles the cross-sectional area will be the minimum area of a quadrilateral that the profile may be contained within.

Itemisation

5B Separate items shall be provided for Passively Safe Traffic Sign Posts in accordance with Chapter II paragraphs 3 and 4 and the following:

Group	Feature	
I	1	Passively safe traffic sign posts.
	2	Extra over passively safe traffic sign posts for electrical housing.
II	1	Circular.
	2	Other profile.
III	1	Planted.
	2	Flanged base.
IV	1	Diameter.
V	1	Cross-sectional area not exceeding 0.05 square metres.

	2	Cross-sectional area exceeding 0.05 but not exceeding 0.10 square metres.
	3	Cross-sectional area exceeding 0.10 square metres but not exceeding 0.15 square metres.
VI	1	Post length not exceeding 4 metres.
	2	Post length exceeding four metres.

Note 1: Group IV shall only apply to Group II feature 1.

Note 2: Group V shall only apply to Group II features 2.

Note 3: Group III to V shall not apply to Group I feature~~s~~ 2

Traffic Sign Posts and Passively Safe Traffic Sign Posts 5C The items for traffic sign posts shall in accordance with the Preambles to Schedule of Rates and Prices General Directions include for:

Item coverage

(a) location lettering and marking,

(b) electrical equipment, wiring, and connections, excluding supply and control cable,

(c) conduit including screwed and threaded connections, bends, tees and other similar features draw wires,

(d) backboard, fixing, protective caps, sealing, grommets, spacers, mounting plates and strips,

(e) doors, locks and keys,

(f) drilling or forming holes and pockets in Structures or foundations,

(g) base plates, bolts, sockets and anchorage assemblies,

(h) top plates and caps,

(i) aligning, fixing and casting into foundations,

(j) cutting post to length,

(k) bedding and grouting,

(l) protective system (as Series 1900 paragraph 4),

(m) identification numbers,

(n) threading cable through ducts sleeves and conduits,

(o) complying with wiring regulations, earthing (other than earth electrodes),

(p) protective treatment,

(q) notices and recording,

(r) preparation and supply of record drawings.

Traffic Sign Bases

Units 5D The unit of measurement shall be:

(i) small traffic sign bases ...……number,

(ii) large traffic sign bases……..cubic metres,

Measurement 5E The measurement of traffic sign bases shall be the complete installation. Small concrete traffic sign bases shall be those not exceeding 1.2 cubic metres. Large concrete traffic sign bases shall be those exceeding 1.2 cubic metres.

Itemisation 5F Separate items shall be provided for traffic sign bases in accordance with Chapter II paragraphs 3 and 4 and the following:

Group	Feature	
I	1	Small concrete traffic sign bases.
	2	Large concrete traffic sign bases.
II	1	Not exceeding 0.3 cubic metres.
	2	Exceeding 0.3 cubic metres but not exceeding 0.6 cubic metres.
	3	Exceeding 0.6 cubic metres but not exceeding 1.2 cubic metres.

Note: Group II shall only apply to Group I feature 1.

Small and Large Traffic Sign Bases 5G The items for small and large traffic sign bases shall in accordance with the Preambles to Schedule of Rates and Prices General Directions include for:

Item coverage

(a) excavation of any material (as Series 600 paragraphs 17, 18, 19 and 23),

(b) disposal of material (as Series 600 paragraph 39),

(c) backfilling and compaction,

(d) in situ concrete (as Series 1700 paragraph 5),

(e) formwork (as Series 1700 paragraph 15),

(f) reinforcement (as Series 1700 paragraph 26),

(g) ducts, sleeves, sockets and anchorages in bases,

(h) reinstatement of surfaces,

(i) preparation and supply of record drawings.

Sign Lighting Units

Units 5I The unit of measurement shall be:

(i) sign lighting units..... number.

Measurement 5J The measurement for sign lighting units shall be of the complete installation.

The measurement of traffic sign lighting units shall be the complete installation except for earth electrodes which shall be measured separately under Series 1400 (paragraphs 24 to 27).

Itemisation 5K Separate items shall be provided for sign lighting units in accordance with Chapter II paragraphs 3 and 4 and the following:

Group	Feature	
I	1	Sign lighting units.
III	1	Mounting height not exceeding 2 metres.
	2	Mounting height exceeding 2 metres.

Sign Lighting Units 5L The items for sign lighting units shall in accordance with the Preambles to Schedule of Rates and Prices General Directions include for:

Item coverage

(a) electrical equipment, wiring, and connections, excluding supply and control cable,

(b) conduit including screwed and threaded connections, bends, tees and other similar features draw wires,

(c) threading cable through ducts, sleeves and conduits,

(d) complying with wiring regulations, earthing (other than earth electrodes), and inspection,

(e) earth block and earthing of sign post and equipment,

(f) light spill screens.

Sign Bracket Arms

Units 5M The unit of measurement shall be:

(i) sign bracket arms ..... number.

Measurement 5N The measurement for sign bracket arms shall be of the complete installation.

Itemisation 5O Separate items shall be provided for sign bracket arms in accordance with Chapter II paragraphs 3 and 4 and the following:

Group	Feature	
I	1	Sign bracket arms.
II	2	Different types.

Sign Bracket Arms 5P The items for sign bracket arms shall in accordance with the Preambles to Schedule of Rates and Prices General Directions include for:

Item coverage

(a) earthing of sign post and equipment,

(b) fixtures and fittings,

(c) protective system (as Series 1900 paragraph 4),

(d) threading cable through ducts sleeves, conduit and the like.

Delete paragraphs 6 to 9 inclusive and replace with the following paragraph 9 inclusive:

Road Markings

Units

9 The unit of measurement shall be:

(i) marking of solid areas ……..square metre,

(ii) marking of lines……..……..linear metre,

(iii) marking of triangles, circles, circles with enclosing arrows, arrows, kerb markings, symbols, nodes, letters and numerals …….number,

(iv) removal of solid areas, lines, triangles, circles, circles with enclosing arrows, arrows, kerb markings, symbols, letters and numerals …… square metre.

Measurement

In paragraph 11 delete the following from the second paragraph:

'but the length of the mark and gap shall be stated'.

Delete paragraph 16 and substitute the following paragraph 16:

Itemisation

16 Separate items shall be provided for marking and removal of road markings in accordance with Chapter II paragraphs 3 and 4 and the following:

Group	Features	
I	1	Removal of road markings.
	2	Road markings.
II	1	Solid areas.
	2	Continuous lines.
	3	Intermittent lines.
	4	Ancillary lines.
	5	Raised rib lines.
	6	Triangles.
	7	Arrows.
	8	Letters and numerals.
III	1	Different materials.
IV	1	Different widths of lines.
	2	Different lengths of arrows.
	3	Different heights of letters and numerals.
V	1	Different diagram numbers for arrows.
VI	1	Screed
	2	Screed or Spray

	3	Extrusion
VII	1	Reflectorised.
VIII	1	Any line, solid area symbol or letter excluding raised rib lines.
	2	Raised rib lines.

Note 1: Group III to VII shall only apply to Group I feature 2.

Note 2: Group VIII shall only apply to Group I feature 1.

Road Studs

In paragraph 19 add the following:

Units

(ii) road stud cylinders……..number,

(iii) replace rubber pads……..number.

In paragraph 21 add the following Group I features and delete Group IV:

Itemisation

Group	Features	
I	2	Road Stud cylinders.
	3	Replace rubber pads.

Road Studs

In paragraph 22 add the following:

Item coverage

(f) surface preparation,

(g) cleaning out existing sockets.

Marker Posts

Marker Posts

39 In paragraph 39 delete sub paragraph (c) and substitute the following:

Item coverage

(c) driving or excavating in acceptable material and driving or excavating in any material (as Series 600 paragraphs 17, 18, 19 and 23).

After paragraph 45 add the following paragraphs 46 to 57 inclusive:

Passively Safe Flexible Chevrons

Units

46 The unit of measurement shall be:

(i) flexible chevrons ..... linear metre.

Measurement

47 Measurement shall be the horizontal length of the complete chevron installation.

Itemisation

48 Separate items shall be provided for flexible chevrons in accordance with Chapter II paragraphs 3 and 4 and the following:

Group	Feature	
I	1	Passively safe RA2 retroreflective rebound chevrons to BS EN 12767.
II	1	Different heights of chevron symbol.

Item coverage 49 (a) traffic signs faces (as this Series paragraph 4),

(b) traffic sign posts (as this Series paragraph 5C),

(c) traffic sign bases (as this Series paragraph 5G).

Location Lettering and Marking of Existing Traffic Signs

Units 50 The units of measurement shall be:

(i) location lettering and marking of existing traffic signs ……number.

Measurement 51 The measurement of location lettering and marking of existing traffic signs shall be for the complete installation.

The location lettering and marking of traffic signs shall not be separately measured for Sign Faces measured in accordance with this Series, paragraphs 1 to 4.

Itemisation 52 Separate items shall be provided for location lettering and marking of existing traffic signs in accordance with Chapter II paragraphs 3 and 4 and the following:

Group	Feature	
I	1	Location lettering and marking.
II	1	Existing traffic signs.

Location lettering and marking of Existing Traffic Signs 53 The item for location lettering and marking of existing traffic signs shall in accordance with the Preamble to Schedule of Rates and Prices General Directions include for:

Item Coverage (a) preparing surface,

(b) removing old number,

(c) marking and lettering,

(d) recording,

(e) reporting.

SCOTTISH MINISTERS' REQUIREMENTS

SCHEDULE 2 PART 1

METHOD OF MEASUREMENT

SERIES 1300: ROAD LIGHTING COLUMNS AND BRACKETS, CCTV MASTS AND CANTILEVER MASTS

Road Lighting Columns and Brackets, Wall Mountings, CCTV Masts and Cantilever Masts

Definitions

'Passively Safe Lighting Columns' refers to columns compliant with BS EN 12767.

Delete paragraphs 2 and 3, and substitute the following paragraphs 2 and 3:

Measurement

2 The measurement of road lighting columns and brackets~~,~~ wall mountings, CCTV masts and cantilever masts shall be the complete installation except for:

(i) earth electrodes which shall be measured separately (under Series 1400 paragraphs 24 to 27),

(ii) earth equipotential bonding which shall be measured separately (under Series 1400 paragraphs 37 to 40),

(iii) luminaires which shall be measured separately (under this Series paragraphs 9 to 12).

Itemisation

3 Separate items shall be provided for road lighting columns and brackets, wall mountings, CCTV masts and cantilever masts in accordance with Chapter II paragraphs 3 and 4 and the following:

Group	Feature	
I	1	road lighting columns.
	2	CCTV masts
	3	cantilever masts
II	1	Passively safe.
III	1	Not exceeding 10 metres nominal height.
	2	Exceeding 10 metres nominal height.
IV	1	Any types of base.
V	1	Single bracket.

Note 1: Groups III and IV shall only apply to Group I features 1 and 4.

Note 2: Group V shall only apply to Group I feature 1.

Remove from Store and Re-erect Road Lighting Columns and Brackets, Wall Mountings, CCTV Masts and Cantilever Masts

Delete paragraphs 5 to 7 inclusive and replace with the following paragraphs 5 to 20 inclusive:

Units

5 The unit of measurement shall be:

(i) remove from store and re-erect road lighting columns and brackets, wall mountings CCTV masts and cantilever masts..... number.

Measurement

6 The measurement of remove from store and re-erect road lighting columns and brackets, wall mountings, CCTV masts and cantilever masts shall be the complete installation except for:

(i) earth electrodes which shall be measured separately (under Series 1400 paragraphs 24 to 27),

(ii) earth equipotential bonding which shall be measured separately (under Series 1400 paragraphs 37 to 40).

Itemisation

7 Separate items shall be provided for remove from store and re-erect road lighting columns and brackets, wall mountings, CCTV masts and cantilever masts in accordance with Chapter II paragraphs 3 and 4 and the following:

Group	Feature	
I	1	Remove from store and re-erect road lighting columns and brackets.
II	1	Any height.
III	3	Any types of bases.

Remove from Store and Re-Erect Road Lighting Columns and Brackets, Wall Mountings, CCTV Masts and Cantilever Masts

8 The items for remove from store and re-erect road lighting columns, brackets and wall mountings, CCTV masts and cantilever masts shall in accordance with the Preambles to Schedule of Rates and Prices General Directions include for:

Item coverage

(a) loading, transporting from store, unloading and positioning for re-erection,

(b) replacing items damaged during the foregoing operation,

(c) modification and new materials,

(d) painting existing painted items,

(e) road lighting columns and brackets, wall mountings, CCTV masts and cantilever masts (as this Series paragraph 4).

Luminaires

Units 9 The units of measurement shall be:

(i) luminaires, ……..... number,

(ii) photo-electric control unit …… number.

Measurement 10 The measurement of luminaires shall be the complete installation.

Itemisation 11 Separate items shall be provided for luminaires, in accordance with Chapter II paragraphs 3 and 4 and the following:

Group	Feature	
I	1	Luminaires.
	2	Photo-electric control unit.
II	2	Different types.

Note: Group II shall only apply to Group I feature 1.

Luminaires 12 The items for luminaires, shall in accordance with the Preambles to Schedule of Rates and Prices General Directions include for:

Item coverage

(a) electrical equipment, wiring and making connections, excluding network cabling,

(b) remote or integral control gear,

(c) wiring from lighting unit to cut-out,

(d) conduit including draw wires, screwed and threaded connections, bends, tees, and other similar features,

(e) threading cable through ducts sleeves, conduit and the like,

(f) fixings, protective caps, sealing grommets, spacers, mountings, plates and strips,

(g) notices, recording and preparation and supply of record drawings,

(h) complying with wiring regulations, earthing (other than earth electrodes),

(i) complying with required lighting levels of all Scheme designs.

Photo-electric control Unit 13 The items for photo-electric control units shall in accordance with the Preambles to Schedule of Rates and Prices General Directions include for:

Item coverage

(a) electrical equipment, wiring and making connections, excluding network cabling,

(b) remote or integral control gear,

(c) wiring from lighting unit, conduit including draw wires, screwed and threaded connections, bends, tees, and other similar features,

(d) threading cable through ducts sleeves, conduit and the like,

(e) fixings, protective caps, sealing grommets, spacers, mountings, plates and strips,

(f) recording and preparation and supply of record drawings,

(g) complying with wiring regulations, earthing (other than earth electrodes).

Replace Lamps

Units

13 A The units of measurement shall be:

(i) replace lamps, ……..... number.

Measurement

14 Replacement of lamps shall only be measured for lamp outages; provided the outage has occurred prior to the due date for bulk lamp change and the outage occurs within a 30mph zone.

Itemisation

15 Separate items shall be provided for replace lamps, in accordance with Chapter II paragraphs 3 and 4 and the following:

Group	Feature	
I	1	Replace high-intensity discharge lamp within 30mph zone.

Replace Lamps

16 The items for replace lamps, shall in accordance with the Preambles to Schedule of Rates and Prices General Directions include for:

Item coverage

(a) removal of existing lamp,

(b) disposal of material.

Marking and lettering of Existing Road Lighting Columns

Units

17 The units of measurement shall be:

(i) marking and lettering of existing road lighting columns …….number.

Measurement

18 The measurement of marking and lettering of existing road lighting columns shall be for the complete installation.

Marking and lettering of lighting columns shall not be separately measured for road lighting columns measured in accordance with this Series, paragraphs 1 to 4.

Itemisation

19 Separate items shall be provided for marking and lettering of existing road lighting columns in accordance with Chapter II paragraphs 3 and 4 and the following:

Group	Feature	
I	1	Marking and lettering existing road lighting columns.

Marking and lettering of Existing Road Lighting Columns

20 The item for numbering of existing road lighting columns shall in accordance with the Preamble to Schedule of Rates and Prices General Directions include for:

Item Coverage

(a) preparing surface (as Series 5000 paragraph 5),

(b) removing old number,

(c) making good protective system (as Series 5000 paragraph 6),

(d) marking and lettering,

(e) recording,

(f) reporting,

(g) conspicuity banding.

SCOTTISH MINISTERS' REQUIREMENTS

SCHEDULE 2 PART 1

METHOD OF MEASUREMENT

SERIES 1400: ELECTRICAL WORK FOR ROAD LIGHTING AND TRAFFIC SIGNS

Locating Buried Road Lighting and Traffic Signs Cable

Delete paragraphs 1 to 4 inclusive.

Trench for Cable or Duct

Itemisation

7 In paragraph 7 delete Groups I, II, III and IV and replace with the following:

Group	Feature	
I	1	Trench for cable or duct.
II	1	Not exceeding 500mm wide.
	2	Exceeding 500mm but not exceeding 1000mm wide.
III	1	Trench depth not exceeding 600mm.
	2	Trench depth exceeding 600mm but not exceeding 900mm and so on in steps of 300mm.

Cable and Duct

Cable and Duct

9 In paragraph 9 delete sub paragraph (g) and substitute the following:

Item coverage

(g) scheduled and unscheduled joints.

Chambers

Itemisation

31 In paragraph 31 delete Group II and substitute the following:

Group	Feature	
II	1	Not exceeding 0.30 square metres internal area.

After paragraph 35 add the following paragraphs 36 to 47 inclusive:

Disconnection of Cables

Units

36 The unit of measurement shall be:

(i) disconnection of cables ..... number.

Measurement

37 The measurement for disconnection of cables from equipment shall be for the complete operation.

Disconnection of cables shall not be separately measured where removal of equipment taken up or down and set aside for re-use or remove to store or licensed facility measured in accordance with Series 200.

Itemisation

38 Separate items shall be provided for disconnection of cables in accordance with Chapter II paragraphs 3 and 4 and the following:

Group	Feature	
I	1	Disconnection of cables.
II	1	Permanent.
	2	Temporary.
III	1	Different sizes.
IV	1	Different types.

Disconnection of Cables

39 The items for disconnection of cables shall in accordance with the Preambles to Schedule of Rates and Prices General Directions include for:

Item coverage

(a) excavation of acceptable material (as Series 600 paragraphs 17 and 18),

(b) excavation of unacceptable material (as Series 600 paragraph 19),

(c) excavation in Hard Material (as Series 600 paragraph 23),

(d) backfilling, compaction and making good of the surface,

(e) disposal of materials (as Series 600 paragraph 39),

(f) locating, working around and supporting pipes, cables, services, apparatus and other similar features,

(g) isolating cables at feeder pillar,

(h) disconnecting cables from termination unit and withdrawing of cable from equipment,

(i) temporary sealing of cable ends,

(j) permanent sealing of cable ends,

(k) cleaning trimming, taping, sealing and capping including clamps,

(l) complying with wiring regulations,

(m) reconnect at feeder pillar,

(n) loading, transporting from store unloading and positioning of materials for erection,

(o) replacing items damaged during operations in (l) above,

(p) take up or down termination unit and remove to licensed facility (as Series 200 paragraph 11),

(q) providing new Site records and updating existing Site records,

(r) reports,

(s) reinstatement of surfaces.

Equipotential Bonding

Units

40 The units of measurement shall be:

(i) earth pits and rods ..... number,

(ii) additional earth conductors ..... linear metre.

Measurement

41 The measurement of earth conductors shall be the summation of the distance along the centre-line of the route between the earth pit and the column earth block.

The measurement of earth conductors shall include the terminations to the earth rods and column earth blocks.

Itemisation

42 Separate items shall be provided for equipotential bonding in accordance with Chapter II paragraphs 3 and 4 and the following:

Group	Feature	
I	1	Equipotential bonding.
II	1	Earth pits and rods.
	2	Additional earth conductors.

Equipotential Bonding

43 The items for equipotential bonding shall in accordance with the Preambles to Schedule of Rates and Prices General Directions include for:

Item coverage

(a) trench for cable or duct (as this Series, paragraph 8),

(b) intermediate supports and fixing devices where cables leave trench and prior to entry into equipment,

(c) twisting and snaking,

(d) preparing, stripping and cleaning ends,

(e) glands and clamps,

(f) driving,

(g) clamps, cables and making connections,

(h) covers frames seating and bedding,

(i) earth rods including pressure plates, glands and clamps,

(j) conduit including draw wires, all purpose made screwed and threaded connections, bends, tees and other similar features,

(k) threading cable through ducts, sleeves, conduit and the like,

(l) conductor cable including preparing, stripping and cleaning ends and connections,

(m) markers, notices, recording and reports,

(n) preparation and supply of record drawings.

Temporary Overhead Feed to Road Lighting Units

Units

44 The unit of measurement shall be:

(i) temporary overhead feed to road lighting units ..... linear metre.

Measurement

45 The measurement of temporary overhead feed to road lighting units shall be the distance between supports.

Itemisation

46 Separate items shall be provided for temporary overhead feed to road lighting units in accordance with Chapter II paragraphs 3 and 4 and the following:

Group	Feature	
I	1	Temporary overhead feed to road lighting units.
II	1	Not exceeding 10 metres nominal height.

		2	10 metres to 15 metres nominal height.
		3	Exceeding 15 metres nominal height.
Temporary Overhead Feed to Road Lighting Units	47	The items for temporary overhead feed to road lighting units shall in accordance with the Preambles to Schedule of Rates and Prices General Directions include for:	
Item coverage		(a)	fixing brackets and supports,
		(b)	catenary wire,
		(c)	replacement of faulty fuses,
		(d)	fit wiring,
		(e)	connectors, glands, clamps, sleeves, cleats, tags, terminal blocks,
		(f)	connecting conductors to terminals, removing knock-outs and drilling backboard, insulating ends of unused conductors, bonding, numbering and lettering, removal of temporary supply,
		(g)	markers,
		(h)	complying with wiring regulations, earthing (other than earth electrodes),
		(i)	Site records and reports,
		(j)	disconnection of cables (as this Series paragraph 39).

SCOTTISH MINISTERS' REQUIREMENTS

SCHEDULE 2 PART 1

METHOD OF MEASUREMENT

SERIES 1500: MOTORWAY COMMUNICATIONS

Loop Detector Installations

Delete paragraph 29 and replace with the following:

Measurement	29	The measurement of loop detector installations shall be the complete installation from the joint with the feeder cable in the communications cabinet, chamber, box or pit within which the loop installation or feeder cable is terminated.

In paragraph 31 add the following:

Loop Detector Installations		
Item coverage	(r)	joints or terminations to feeder cable within communications cabinet, chamber, box or pit.

SCOTTISH MINISTERS' REQUIREMENTS

SCHEDULE 2 PART 1

METHOD OF MEASUREMENT

SERIES 1700: STRUCTURAL CONCRETE

Precast Concrete

Itemisation

9 In paragraph 9 add the following Group V:

Group	Feature	
V	1	Cross sectional area not exceeding 0.025m².
	2	Cross sectional area exceeding 0.025m² but not exceeding 0.05m².
	3	Cross sectional area exceeding 0.05m² but not exceeding 0.10m².

Note 1: Group III shall only apply to Group I features 1 and 3.

Note 2: Group V shall only apply to Group I feature 2.

27 In paragraph 27 add the following

Item coverage

(c) bending dowel bars.

After paragraph 39 add the following new paragraphs 40 to 49 inclusive:

Structural Concrete Repairs

Units

40 The units of measurement shall be:

(i) structural concrete repairs using normal flow concrete and high flow repair concrete, structural concrete repairs using proprietary sprayed concrete …….. cubic metre,

(ii) structural concrete repairs using proprietary repair mortars ..... litre,

(iii) crack injection using proprietary resins ……litre.

Measurement

41 Measurement of structural concrete repairs shall be the volume of the void to be filled with repair mortar resin or concrete.

Itemisation

42 Separate items shall be provided for structural concrete repairs in accordance with Chapter II paragraphs 3 and 4 and the following:

Group	Feature	
I	1	Structural concrete repairs.
	2	Crack injection.
II	1	Using proprietary repair mortars.

2	Using normal flow concrete.
3	Using high flow concrete.
4	Using proprietary sprayed concrete.
5	Using proprietary resins.

Structural Concrete Repairs

43 The items for structural concrete repairs shall in accordance with the Preambles to Schedule of Rates and Prices General Directions include for:

Item coverage

(a) saw cutting,

(b) removal of defective concrete,

(c) breaking out of sound concrete,

(d) disposal of material (as Series 600 paragraph 39),

(e) protective sheeting or shielding against debris and or spray and its removal,

(f) blast cleaning reinforcement,

(g) preparation of concrete surfaces to receive concrete repair materials including protecting untreated areas,

(h) concrete repair materials (as Series 1700 paragraph 5) including sealants, priming and bonding agents,

(i) finishing,

(j) mixing, placing in or against any surface, curing and protection of concrete repair materials,

(k) falls, cambers and shaped profiles

(l) procedure trials,

(m) sample panels,

(n) masking adjacent areas,

(o) removal of rust and chloride deposits from reinforcement,

(p) production tests,

(q) water supply.

Formwork for Concrete Repairs

44 The units, measurement, itemisation and item coverage for formwork for concrete repairs shall be as this Series paragraphs 11-21 inclusive.

Steel Reinforcement for Concrete Repairs

45 The units, measurement, itemisation and item coverage for steel reinforcement for concrete repairs shall be as this Series, paragraphs 22 to 27 inclusive.

Backfilling to Structures with Foamed Concrete

Units

46 The units of measurement shall be:

(i) backfilling to Structures with foamed concrete …. cubic metre.

Measurement

47 The Measurement of backfilling to Structures with foamed concrete will be the volume of the void to be filled.

Itemisation

48 Separate items shall be provided for backfilling to Structures with foamed concrete in accordance with Chapter II paragraphs 3 and 4 and the following:

Group	Feature	
I	1	Backfilling to Structures with foamed concrete.

Backfilling to Structures with Foamed Concrete

49 The items for the backfilling to Structures with foamed concrete shall in accordance with the Preambles to Schedule of Rates and Prices General Direction include for:

Item Coverage

(a) in situ concrete (as this Series paragraph 5),

(b) formwork (as this Series paragraph 15).

SCOTTISH MINISTERS' REQUIREMENTS

SCHEDULE 2 PART 1

METHOD OF MEASUREMENT

SERIES 1800: STEELWORK FOR STRUCTURES

Butt weld, fillet weld and other defect repairs to steelwork

After paragraph 22 add the following paragraphs 23 to 56 inclusive:

Units

23 The units of measurement for butt weld, fillet weld and other
defect repairs to steelwork shall be:

i) defect removal placement of new weld (up to and including lengths up to 250mm)..... number ,

ii) defect removal placement of new weld (lengths over 250mm)..... linear metre

Measurement

24 The measurement of fillet weld and other defect repairs shall be measured as the nominal lengths including any addition to cater for existing root gaps.

Fillet welds: the repair shall be in two parts; removal of defective weld or Defect and placement of new weld. The removal of defective weld or Defect and the placement of weld shall be measured separately and once only.

Lengths of defects and replaced welds shall be measured to the nearest 10mm.

Itemisation

25 Separate items shall be provided for butt weld, fillet weld and other defect repairs in accordance with Chapter II paragraphs 3 and 4 and the following:

Group	Feature	
I	1	Defect repair.
II	1	Butt weld.
	2	Fillet weld.
	3	Other defect.
III	1	Defect removal
	2	Placement of weld

Butt weld, fillet weld and other

26 The items for defect repairs shall be in accordance with the Preambles to Schedule of Rates and Prices General Directions include in:

defect Repairs to Steelwork

Item coverage

(a) gaining access to existing structure surfaces, working in confined spaces, and including all necessary temporary lighting and ventilation,

(b) provision of qualified inspection personnel including the submission of reports,

(c) approval of pre-qualified welding procedural trials and welders,

(d) approval of pre-qualified welding, flame cutting and grinding procedures,

(e) provision of pre-heat and shelters for welding,

(f) provision of all plant, equipment and consumables for grinding, welding and inspection,

(g) all non-destructive testing including that to existing steelwork to demonstrate removal of defect, new welds,

(h) all measures necessary to protect the existing structure against damage,

(i) the removal of defect and the placement of weld,

(j) reinstatement of corrosion protection (as Series 5000 paragraph 6),

(j) dressing existing welds within 100mm of removed or placed weld to blend into repaired area,

(k) disposal or storage of removed steelwork (Temporary Attachments).

Welding and Flame Cutting Procedure Trials and Application Trials

Units

27 The unit measurement shall be:

(i) procedure trials, application trials ..... number.

Measurement

28 The measurement of procedure trials and application trials shall be the number of trials ordered and accepted by the Engineer as giving satisfactory results.

Itemisation

29 Separate items shall be provided for procedure trials and application trials in accordance with Chapter II paragraphs 3 and 4 and the following:

Group	Feature	
I	1	Procedure trial at place of fabrication.
	2	Procedure trial on Site.
	3	Application trial on Site.
II	1	Welding.

		2	Flame cutting.
		3	Shearing.

Procedure trials 30 The items for procedure trials shall in accordance with the shall in accordance with the Preambles to Schedule of Rates and Prices General Directions include for:

Item coverage

(a) tensile tests, bend tests, impact tests and macro examination tests,

(b) fillet weld fracture tests and macro examination tests,

(c) tests to determine the Vickers hardness value,

(d) radiographic, ultrasonic and MPI of welds as appropriate,

(e) taking measurements and observations and recording and supplying one copy of the record to the Engineer,

(f) preparation of existing steel removed from the works for a trial,

(g) trials ordered by the Engineer and not accepted as satisfactory.

Application Trials 31 The items for application trials shall in accordance with the Preambles to Schedule of Rates and Prices General Directions include for:

Item coverage

a) macro examination tests,

(b) tests to determine the Vickers hardness value,

(c) taking measurements and observations and recording and supplying one copy of the record to the Engineer,

(d) preparation of existing steel removed from the works for a trial,

(e) trials ordered by the Engineer and not accepted as satisfactory.

Other Trials and Demonstrations

Units 32 The unit measurement shall be:

(i) carry out trial, demonstration, *etc.* ..... number.

Measurement 33 The measurement of other trials shall be the number of trials ordered and accepted by the Engineer as giving satisfactory results.

Itemisation 34 Separate items shall be provided for other trials in accordance with Chapter II paragraphs 3 and 4 and the following:

Group	Feature	
I	1	Trial or demonstration as specified for each activity.

Other trials and demonstrations

35 The items for other trials and demonstrations shall in accordance with the Preambles to Schedule of Rates and Prices General Directions include for:

Item coverage

(a) simulating the most unfavourable conditions liable to occur in practice with the most unfavourable combination of variables,

(b) all necessary equipment, temporary works, access staging and shelters (if appropriate) for the performance of the trial,

(c) all necessary personnel, equipment and facilities to carry out readings, measurements and observations during the trial, together with any destructive and non-destructive tests ordered by the Overseeing Organisation and supplying one copy of the record of each test to the Engineer,

(d) preparation of existing material for the trial,

(e) trials or parts of trials and tests or parts of tests ordered by the Engineer and not accepted as satisfactory.

Steelwork Inspection on Forth Road Bridge

Units

36 The units of measurement of Steelwork Inspection on Forth Road Bridge shall be:

i) visual inspection of steel deck…….square metre,

ii) magnetic particle inspection …linear metre,

iii) ultrasonic inspection ……linear metre,

Measurement

37 Measurement of steelwork inspection shall be for the inspection of the deck plate, deck plate welds and deck to trough welds on Forth Road Bridge by appropriately qualified and experienced persons.

Itemisation

38 Separate items shall be provided for steelwork inspection on Forth Road Bridge in accordance with Chapter II paragraphs 3 and 4 and the following:

Group	Feature	
I	1	visual inspection.
	2	magnetic particle inspection.
	3	ultrasonic inspection
II	1	steel deck plate
	2	fillet weld
	3	butt weld

Steelwork Inspection on Forth Road Bridge

39 The items for steelwork inspection on Forth Road Bridge shall in accordance with the Preambles to Schedule of Rates and Prices General Directions include for:

Item coverage

a) Undertaking the inspections using suitably qualified and experienced persons;
b) The use of properly calibrated and certified equipment;
c) Proposing and agreeing with the Overseeing Organisation a suitable method of locating and recording defects found;
d) Marking out defects;
e) Reporting of results of inspection to the Overseeing Organisation.

Edge Trimmer Repair and Replacement

Definitions

40 Edge trimmers repairs are where parts of the existing edge trimmer are removed and new sections of edge trimmer are inserted. If more than three metres of any one edge trimmer require replacement then it shall be measured under edge trimmer replacement.

Edge trimmer replacement is where an entire existing edge trimmer is removed and a new trimmer is erected in its place.

Edge trimmer stiffener repairs are stiffeners inserted onto an existing edge trimmer and include replacement of existing stiffeners.

Units

41 The units of measurement of Edge Trimmer Repair and Replacement shall be:

i) edge trimmer stiffener repairs……..number,

ii) edge trimmers repairs…linear metre,

iii) edge trimmer replacement ……number.

Measurement

42 Edge trimmer replacement shall be measured as the number of edge trimmers replaced, measured only once.

Edge trimmer repairs shall be measured as the number of linear metres of edge trimmer replaced rounded up to the nearest metre, measured once only.

Edge trimmer stiffener repairs shall be the number of edge trimmer stiffeners repaired or replaced.

Itemisation

43 Separate items shall be provided for Edge Trimmer Repair and Replacement in accordance with Chapter II paragraphs 3 and 4 and the following:

Group	Feature	
I	1	Edge trimmer repair.
	2	Edge trimmer replacement.
	3	Edge trimmer stiffener repair

Edge Trimmer Repair and Replacement

44 The items for Edge Trimmer Repair and Replacement shall in accordance with the Preambles to Schedule of Rates and Prices General Directions include for:

Item coverage

(a) fabrication (as this series, paragraph 6),

(b) erection (as this series, paragraph 9),

(c) breaking out existing bituminous and concrete materials,

(d) removal of existing edge trimmers or lengths of edge trimmers and preparing existing surfaces to receive new edge trimmers or new lengths of edge trimmers,

(e) on site bending and/or welding edge trimmers to suit the profile of the deck,

(f) non-destructive testing of welds (g) application trials to demonstrate repair methods including further application when trials not carried out successfully,

(h) inspections of infill material and repairs of same until adjacent permanent works complete,

(i) phasing of edge trimmer work with other work,

(j) traffic management,

(k) all access required,

(l) disposal of material,

(m) protective coating as series 1900 Paragraph 4,

(n) surface preparation and protective coating as Series 5000 paragraph 6.

Replacement of King Post on Forth Road Bridge

Units

45 The units of measurement shall be:

(i) replacement of king post ……number.

Measurement

46 Measurement of replacement of king post on Forth Road Bridge shall be the replacement of the complete unit.

Itemisation

47 Separate items shall be provided for replacement of king post on Forth Road Bridge in accordance with Chapter II paragraphs 3 and 4 and the following:

Group	Feature	
I	1	Replacement of king post.

Replacement of King Post

48 The items for replacement of king post on Forth Road Bridge shall in accordance with the Preambles to

Schedule of Rates and Prices General Directions include for:

Item coverage

(a) all access required,

(b) removal of the existing king post,

(c) disposal of the existing king post,

(d) fabrication of the replacement king post as this series paragraph 6,

(e) erection of the replacement king post as this series paragraph 9,

(f) protective coating as series 1900 paragraph 4.

Tension Check of Forth Road Bridge Cable Band Bolts

Units

49 The units of measurement shall be:

(i) Tension check of Forth Road Bridge cable band bolts……No

Measurement

50 Measurement of tension check of cable band bolts shall be checking and if necessary adjusting the tension in all the bolts in each cable band.

Itemisation

51 Separate items shall be provided for tension check of Forth Road Bridge cable band bolts in accordance with Chapter II paragraphs 3 and 4 and the following:

Group	Feature	
I	1	Tension check of cable band bolts

Tension check of Forth Road Bridge Cable Band Bolts

Item coverage

52 The items for tension check of Forth Road Bridge cable band bolts shall in accordance with the Preambles to Schedule of Rates and Prices General Directions include for:

(a) all access required,

(b) all tools and equipment necessary to check and adjust the tension in the bolts,

(c) measuring the tension in all bolts in each cable band,

(d) adjusting the tension in all bolts in each cable band to the required tension,

(e) recording and reporting results.

Replacement of Packs between the Half Joints in the Longitudinal Stringers on the Forth Road Bridge

Units

53 The units of measurement shall be:

(i) Replacement of packs between half joints in the longitudinal stringers on the Forth Road Bridge ……No

Measurement	54	Measurement of replacement of packs between the half joints in the longitudinal stringers on the Forth Road Bridge shall be the replacement of all the packs within the half joint.
Itemisation	55	Separate items shall be provided for replacement of the packs between the half joints in the longitudinal stringers on the Forth Road Bridge in accordance with Chapter II Paragraphs 3 and 4 and the following:

Group	Feature	
I	1	Replacement of packs in main span
	2	Replacement of packs in side span
II	1	during night shift
	2	during day shift

Replacement of packs between the half joint in the longitudinal stringers	56	The items for replacement of packs between the half joints of the longitudinal stringers on the Forth Road Bridge shall in accordance with the Preambles to Schedule of Rates and Prices General Directions include for:
Item coverage		a all access required, b removal of existing packs including breaking out existing welds, c disposal of existing packs, d fabrication of the packs as this series Paragraph 6, e installation of the existing packs as this series Paragraph 9 including adjusting pack height as required, f all wedges, jacks, jacking stools and plant required for replacement of packs including installation and removal, g preparation of surfaces to receive new packs, h drilling holes in existing steelwork, i checking deck levels before and during replacement of packs, j recording loads in jacks and measurement of deck levels and gaps, k loosening and re-tightening billets l surface preparation and protective coating as series 5000, Paragraphs 5 and 6.

SCOTTISH MINISTERS' REQUIREMENTS

SCHEDULE 2 PART 1

METHOD OF MEASUREMENT

SERIES 2000: WATERPROOFING FOR STRUCTURES

Waterproofing

Itemisation 3 In paragraph 3 delete Group III.

Item coverage Add the following sub-paragraphs to paragraph 4:

(p) application of aggregate (Flintag or equivalent),

(q) provision of at least 3 number sample boards, each 800mm x 800mm, on which the minimum, average and maximum application rate of aggregate is applied. These boards to be available on site for use by the Overseeing Organisation's site supervisory staff,

(r) removal of excess aggregate,

(s) application of tack coat.

Removal of Existing Waterproofing

Add the following to paragraph 10:

Measurement 10 Structural repairs required to the existing deck shall be measured in accordance with Series 1700 (Structural Concrete).

Itemisation 11 In paragraph 11 delete Group II and substitute the following:

Group	Feature	
II	1	Different types.

Removal of Existing Waterproofing

In paragraph 12, delete (d) and substitute the following:

Item coverage 12 (d) additional preparation of bridge decks to receive new waterproofing.

Add the following sub-paragraphs to paragraph 12:

(h) removal of residual bituminous material attached to waterproofing membrane and checking the integrity of the bituminous materials that remains attached to the waterproofing to ensure it is acceptable to be overlaid with mastic asphalt,

(i) maintaining water supply to water jetting equipment;

(j) dealing with water from the water jetting process and disposing in accordance with the requirements of Scottish Environmental Protection Agency,

(k) inspecting, cutting out and repair of areas of damaged existing waterproofing.

Repairs to Existing Waterproofing

Units

13 The units of measurement shall be:

(i) repairs to existing waterproofing ……square metre.

Measurement

14 Measurement of repairs to existing waterproofing shall be the area of existing waterproofing to be repaired.

Itemisation

15 Separate items shall be provided for repairs to existing waterproofing in accordance with Chapter II paragraphs 3 and 4 and the following:

Group	Feature	
I	1	Repairs to existing waterproofing.

Repairs to Existing Waterproofing

Item coverage

16 The items for repairs to existing waterproofing shall in accordance with the Preambles to Schedule of Rates and Prices General Directions include for:

(a) marking out the areas of waterproofing to be repaired,

(b) removal of surfacing,

(c) removal of protective layer,

(d) removal of existing waterproofing,

(e) removal of primer,

(f) disposal of materials (as Series 600 paragraph 39),

(g) making good edges of repair,

(h) preparation of existing surfaces to receive new waterproofing,

(i) measures to prevent damage to existing surfaces,

(j) trials and approval tests,

(k) removal of residual bituminous material attached to waterproofing membrane and checking the integrity of the bituminous materials that remains attached to the waterproofing to ensure it is acceptable to be overlaid with mastic asphalt,

(l) maintaining water supply to water jetting equipment,

(m) dealing with water from the water jetting process and disposing in accordance with the requirements of Scottish Environmental Protection Agency,

(n) new waterproofing (as Series 2000 paragraph 4).

SCOTTISH MINISTERS' REQUIREMENTS

SCHEDULE 2 PART 1

METHOD OF MEASUREMENT

SERIES 2300: BRIDGE EXPANSION JOINTS AND SEALING OF GAPS

Bridge Deck Expansion Joints

Definition 1 Add the following to paragraph 1:

Types of replacement bridge expansion joints and abbreviations used in the descriptions in the Schedule of Rates and Prices are as follows:

Type	Abbreviation	Description
1	BJUCS	Buried joint under continuous surfacing.
2	APJ	Asphaltic plug joint.
3	NJWPS	Nosing joint with poured sealant.
4	NWPCS	Nosing with preformed compression seal.
5	RE	Reinforced elastomeric.
6	EIMR	Elastomeric in metal runners.

In paragraph 2 add the following:

Units 2 (ii) replacement bridge deck expansion joints ……..... linear metre.

In paragraph 3 add the following:

Measurement 3 The measurement of replacement bridge deck expansion joints shall be the complete installation measured along the centre-line of the joint.

Alterations and or repairs to the Structure excluding any damage caused by the removal of the existing bridge expansion joint, shall be measured under Series 1700 concrete repairs.

Delete paragraph 4 and substitute the following:

Itemisation 4 Separate items shall be provided for replacement of bridge expansion joints in accordance with Chapter II paragraphs 3 and 4 and the following:

Group	Feature	
I	1	Bridge deck expansion joints.
	2	Replacement bridge expansion joints.
II	1	Different types or materials.

III	1	Different lengths.
IV	1	Different gap widths.
V	1	Movement range not exceeding 30mm.
	2	Movement range exceeding 30mm but not exceeding 100mm.
	3	Movement range exceeding 100mm but not exceeding 200mm.
VI	1	Cross sectional area not exceeding 0.05 square metres.
	2	Cross sectional area exceeding 0.05 square metres but not exceeding 0.10 square metres.
	3	Cross sectional area exceeding 0.10 square metres but not exceeding 0.15 square metres.
	4	Cross sectional area exceeding 0.15 square metres but not exceeding 0.20 square metres.

Note 1: Group III feature 1 and Group IV feature 1 shall only apply to Group 1 feature 1.

Note 2: Groups V and VI shall only apply to Group 1 feature 2.

Note 3: Groups V shall not apply to asphalt plug joints (APJ).

Note 4: Groups VI shall only apply to asphalt plug joints (APJ).

Bridge Expansion Joints

5 In paragraph 5 add the following:

Item coverage

(q) removing existing bridge expansion joints including sealants, metalwork and joint filler, sub-surface drainage, below joint drainage and in situ nosings,

(r) cutting out and making good existing pavements, footways, kerbs, structures and the like,

(s) making good any damage caused by the foregoing operations,

(t) disposal of material (as Series 600 paragraph 39),

(u) removal and renewal of broken studs,

(v) additional bedding and nosing material.

After paragraph 5 add the following paragraph 5A:

Replacement Bridge Deck Expansion Joints

5A The items for replacement bridge deck expansion joints shall in accordance with the Preambles to Schedule of Rates and Prices General Direction include for:

Item coverage

(a) as this Series paragraph 5.

Sealing of Gaps

In paragraph 6 add the following:

Units 6 (iii) renew joint filler ..... square metre,

(iv) renew joint sealant, water bar, water stop ..... linear metre.

Delete paragraph 7 to 10 and substitute the following:

Measurement 7 The measurement of joint filler and renew joint filler shall be the area of the surface to be covered as stated in this Contract.

The measurement of joint sealant and renew joint sealant shall be the length of the joint on the external face of the sealant.

The measurement of water bar or water stop and renew water bar and water stop shall be the length along the axis.

Joint filler and joint sealant to bridge deck expansion joints shall not be separately measured.

Itemisation 8 Separate items shall be provided for renew joint sealants in accordance with Chapter II paragraphs 3 and 4 and the following:

Group	Feature	
I	1	Joint filler.
	2	Joint sealant.
	3	Water bar or water stop.
	4	Renew joint filler.
	5	Renew joint sealant.
	6	Renew water bar or water stop.
II	1	Different types or materials.
III	1	Different sizes.
IV	1	Different thicknesses.
V	1	Not exceeding 250mm² cross sectional area.
	2	Exceeding 250mm² but not exceeding 500mm² cross sectional area.
	3	Exceeding 500mm² but not exceeding 750mm² cross sectional area.
VI	1	Not exceeding 25mm thick.
	2	Exceeding 25mm but not exceeding 50mm thick.

Note 1: Group III shall only apply to Group I features 2, 3 and 6.

Note 2: Group IV shall only apply to Group I features 1 and 4.

Note 3: Group V shall only apply to Group I features 1 and 4.

Note 4: Group VI shall only apply to Group I features 2 and 5.

Joint Filler and Renew Joint Filler	9	The items for joint filler and renew joint filler shall in accordance with the Preambles to Schedule of Rates and Prices General Directions include for:
Item coverage		(a) cutting and shaping, (b) preparing, cleaning and priming surfaces, (c) adhesives and the like, (d) applying, inserting and casting in, (e) compressible strip, (f) masking and protection, (g) complying with temperature constraints, (h) removal of existing sealants, fillers, metalwork, and backing strips, (i) making good any damage caused by the foregoing operations, (j) disposal of material (as Series 600 paragraph 39).
Joint Sealant and Renew Joint Sealants	10	The items for joint sealant and renew joint sealants shall in accordance with the Preambles to Schedule of Rates and Prices General Directions include for:
Item coverage		(a) preparing and cleaning surfaces, (b) priming the surface of the joint, (c) compressible strip, (d) masking and protection, (e) complying with temperature constraints, (f) removal of existing sealants, metalwork, and backing strips, (g) making good any damage caused by the foregoing operations, (h) disposal of material (as Series 600 paragraph 39).

SCOTTISH MINISTERS' REQUIREMENTS

SCHEDULE 2 PART 1

METHOD OF MEASUREMENT

SERIES 2400: BRICKWORK, BLOCKWORK AND STONEWORK

Brickwork

Itemisation 3 In paragraph 3 delete Features 1 to 4 from Group IX and replace with Feature 1 as follows:

Group	Feature	
IX	1	In walls and in facework to concrete.

Blockwork and Stonework

Itemisation **7** In paragraph 7 delete Features 1 to 4 from Group VIII and replace with Features 1 and 2 as follows:

Group	Feature	
VIII	1	In walls and in facework to concrete.
	2	In arches.

Remove from Store and Relay Brickwork, Blockwork or Stonework

Itemisation 11 In paragraph 11 delete Features 1 to 4 from Group IX and replace with Features 1 to 2 as follows:

Group	Feature	
IX	1	In walls or in facework to concrete.2 In arches.

Remove from Store and Relay Brickwork, Blockwork or Stonework

12 In paragraph 12 add the following:

Item coverage (f) retrieval of displaced materials from their position after displacement (excluding fees to Network Rail).

After paragraph 12 add the following paragraphs 13 to 20 inclusive:

Rebedding of Precast Concrete Copings

Units 13 The unit of measurement shall be:

(i) rebedding of precast concrete coping ..... linear metre.

Measurement 14 The measurement of rebedding of precast concrete copings shall be the length of the work required.

Itemisation 15 Separate items shall be provided for rebedding of precast concrete copings in accordance with Chapter II paragraphs 3 and 4 and the following:

Group	Feature	
I	1	Rebedding precast concrete coping.

Rebedding Precast Concrete Coping 16 The items for rebedding precast concrete copings shall in accordance with the Preambles to Schedule of Rates and Prices General Directions include for:

Item coverage

(a) take up or down and set aside for re-use or remove to store or licensed facility (as Series 200 paragraph 11),

(b) loading, transporting from store unloading and positioning for rebedding,

(c) removal of old mortar,

(d) bedding in any mortar.

Repointing

Units 17 The units of measurement shall be:

(i) repointing in walls, arches and in facework to concrete and arches ……..... square metre,

(ii) repointing in string courses and copings ……..... linear metre.

Measurement 18 The measurement of repointing in walls, arches and in facework to concrete and in arches shall be the superficial area of brickwork, blockwork and stonework required by this Contract. No deductions shall be made for openings of 0.10 square metres or less.

The measurement of repointing in string courses and copings shall be the length of the joints in the brickwork, blockwork and stonework required by this Contract.

All items in this Series shall be deemed to cover alteration and repair work as well as new work.

Itemisation 19 Separate items shall be provided for repointing in accordance with Chapter II paragraphs 3 and 4 and the following:

Group	Feature	
I	1	Brickwork or blockwork.
	2	Stonework.
II	1	Any Different types of mortar.
III	1	In walls, arches and in facework to concrete and in arches.
	2	In string courses and in copings.
IV	1	Not exceeding 300mm girth.
	2	Exceeding 300mm girth.

Note: Group IV shall only apply to Group III feature 2.

Repointing	20	The items for repointing shall in accordance with the Preambles to Schedule of Rates and Prices General Directions include for:
Item coverage		(a) sample panels, (b) grinding out or raking out joints, (c) removing loose material and washing clean, (d) curing and protection, (e) admixtures and additives, (f) disposal of material (as Series 600 paragraph 39), (g) multiple operations for deep cavities, (h) replacing items damaged during the foregoing operations.

SCOTTISH MINISTERS' REQUIREMENTS

SCHEDULE 2 PART 1

METHOD OF MEASUREMENT

SERIES 3000: LANDSCAPE AND ECOLOGY

Ground Preparation and Cultivation

Definitions

Delete paragraph 1 and replace with the following:

1 Landscape and ecology work in this Series shall comprise new work and maintenance of existing areas that are outwith the items in Series 6100 and 6800.

Itemisation

In paragraph 4 delete Group II and substitute the following:

Group	Feature	
II	1	Any density of cover.

Planting

Itemisation

In paragraph 12 delete Groups IV and Group V and replace with the following:

Group	Feature	
IV	1	Transplanted.

Mulching

Itemisation

In paragraph 15 delete Group VI.

Weed Control

Units

In paragraph 17 delete (i) and (ii) and replace with the following:

(i) weed control …….. square metre.

Measurement

Delete paragraph 18 and substitute the following:

18 The measurement of weed control shall be the plan area.

Itemisation

In paragraph 19 delete Groups II, III, IV and V and replace with the following:

Group	Feature	
II	1	Different types of herbicide.

Maintenance of Established Trees and Shrubs

In paragraph 21 add new paragraph (iv):

(iv) removal of branches……..number.

Measurement

Add to paragraph 22 the following:

The girth of trees for felling shall be measured at a height of 1 metre above ground level.

The girth of branches to be removed shall be measured at the severance point and at right angles to the branch.

Removal of branches not exceeding 300mm girth will be deemed to be tree surgery and measured under the applicable items for tree surgery.

Where five or more branches exceeding 300mm girth are to be removed from a single tree this will be deemed to be tree surgery and will be measured under the applicable items for tree surgery.

Itemisation

In paragraph 23 Group I add the following:

Group	Feature	
I	9	Removal of branches.

In paragraph 23 delete Group II, III, IV, V, VI and VII and replace with the following:

Group	Feature	
II	1	Different size categories.
III	1	Exceeding 300mm not exceeding 900mm girth.
	2	Exceeding 900mm girth.
IV	1	Different density of cover.
V	1	Type of felling.
VI	1	Arisings spread on Site.
	2	Arisings removed from Site.

Note 1: Group II and Group V shall only apply to Group I feature 8.

Note 2: Group III shall only apply to Group I feature 9.

Note 3: Group IV shall only apply to Group I feature 3.

Note 3: Group VI shall only apply to Group I features 2 and 3.

Item coverage

In paragraph 25 add the following:

(h) spreading of arisings on Site.

Item coverage

In paragraph 26 add the following:

(g) spreading of arisings on Site,

(h) grubbing out or treating stumps.

After paragraph 30 add the following new paragraph 30A:

Removal of Branches

30A The items for removal of branches shall in accordance with the Preambles to Schedule of Rates and Prices General Directions include for:

Item coverage

(a) as paragraph 29 items (a) to (l).

Maintenance of Established Wildflower Areas, Areas of Nature Conservation Value and Ornamental Planting Areas

Itemisation

In paragraph 37 delete Group III.

After paragraph 52 add the following paragraphs 53 to 56 inclusive:

Tubes, Guards and Ties and Removal of Tubes, Guards and Ties

Units

53 The units of measurement shall be:

(i) tree tubes, guards and ties and removal of tree tubes, guards and ties ……..…..... number.

Measurement 54 The measurement shall be the number of individual tubes, guards and ties provided or removed.

Itemisation 55 Separate items shall be provided for replacement and removal of tree tubes, guards and ties in accordance with Chapter II paragraphs 3 and 4 and the following:

Group	Feature	
I	1	Tree tube.
	2	Tree guard.
	3	Tree tie.
	4	Remove tree tube.
	5	Remove tree guard.
	6	Remove tree tie.

Tree Tubes, Guards and Ties and Removal of Tubes Guards and Ties 56 The items for tree tubes, guards and ties and removal of tubes, guards and ties shall in accordance with the Preambles to Schedule of Rates and Prices General Directions include for:

Item coverage

(a) removal of existing tree tubes, guards and ties,

(b) take up or down and set aside for re-use or remove to store or licensed facility (as Series 200 paragraph 11),

(c) transportation, packing and unpacking,

(d) storage, handling and distribution,

(e) multiple handling,

(f) labelling, strapping and spacers.

SCOTTISH MINISTERS' REQUIREMENTS

SCHEDULE 2 PART 1

METHOD OF MEASUREMENT

SERIES 3300: SITE INVESTIGATION

Rotary Coring of Existing Pavement

Units

1 The unit of measurement shall be:

(i) rotary coring of existing pavement and extra over for each increase in depth ..……... number.

Measurement

2 The measurement of rotary coring of existing pavement and extra over for each increase in depth shall be for the complete operation and the depth of core shall be taken as the overall length of the extracted core.

Itemisation

3 Separate items shall be provided for rotary coring of existing pavement in accordance with Chapter II paragraphs 3 and 4 and the following:

Group	Feature	
I	1	Rotary coring of existing pavement depth of core not exceeding 150mm.
	2	Extra over for each increase in depth of core of 150mm or part thereof.
II	1	Not exceeding 150mm diameter.

Rotary Coring of Existing Pavement

4 The items for rotary coring of existing pavement and extra over for each increase in depth shall in accordance with the Preambles to Schedule of Rates and Prices General Directions include for:

Item coverage

(a) cutting and extracting sample,

(b) labelling, packaging and delivery to the Operating Company's store,

(c) recording data analysing interpreting and reporting,

(d) supplying the Overseeing Organisation with copies of the data and reports,

(e) protecting and storing samples,

(f) removing all loose or superfluous material,

(g) disposal of material (as Series 600 paragraph 39),

(h) reinstatement of paved area (as Series 700 paragraph 36).

Rotary Coring of Existing Structures

Units

5 The unit of measurement shall be:

(i) rotary coring of existing Structures and extra over for each increase in depth ..... number.

Measurement 6 The measurement of rotary coring of existing Structures and extra over for each increase in depth shall be the complete operation and the depth of core shall be taken as the overall length of the extracted core.

Itemisation 7 Separate items shall be provided for rotary coring of existing Structures in accordance with Chapter II paragraphs 3 and 4 and the following:

Group	Feature	
I	1	Rotary coring of existing Structures depth of core not exceeding 150mm.
	2	Extra over for each increase in depth of core of 150mm or part thereof.
II	1	Not exceeding 150mm diameter.

Rotary Coring of Existing Structures 8 The items for rotary coring of existing Structures and extra over for each increase in depth shall in accordance with the Preambles to Schedule of Rates and Prices General Directions include for:

Item coverage

(a) locating reinforcement,

(b) cutting and extracting sample,

(c) labelling, packaging and delivery to the Operating Company's store,

(d) recording data analysing interpreting and reporting,

(e) supplying the Overseeing Organisation with copies of the data and reports,

(f) protecting and storing samples,

(g) removing all loose or superfluous material,

(h) disposal of material (as Series 600 paragraph 39),

(i) reinstatement.

Inspection Patches on Bridge Structures

Units 9 The unit of measurement shall be:

(i) excavate inspection patches, reinstate inspection patches ..... number.

Measurement 10 The measurement of excavate and reinstate inspection patches shall be for the complete operation.

Itemisation 11 Separate items shall be provided for excavate and reinstate inspection patches on bridge Structures in accordance with Chapter II paragraphs 3 and 4 and the following:

Group	Feature	
I	1	Excavate inspection patches on bridge Structures.
	2	Reinstate inspection patches on bridge Structures.

II	1	Not exceeding 0.25 square metres in area.
	2	Over 0.25 square metres but not exceeding 0.50 square metres in area, and so on in steps of 0.50 square metres.
III	1	Not exceeding 150mm deep.
	2	Over 150mm but not exceeding 300m deep.

Excavate and Reinstate Inspection Patches on Bridge Structure

12 The items for excavate and reinstate inspection patches on bridge Structure shall in accordance with the Preambles to Schedule of Rates and Prices General Directions include for:

Item coverage

(i) in the case of excavate:

(a) excavation (as Series 600 paragraphs 17, 18, 19 and 23),

(b) removal of waterproofing system (as Series 2000 paragraph 12),

(c) disposal of material (as Series 600 paragraph 39).

(ii) in the case of reinstate:

(a) reinstatement of paved area (as Series 700 paragraph 36),

(b) waterproofing (as Series 2000 paragraph 4).

Structural Investigations

Units

13 The unit of measurement shall be:

(i) half cell potential survey, cover survey, delamination/soundness survey, exposing reinforcement …….. square metre,

(ii) other surveys, tests and examinations ..…… number.

Measurement

14 The measurement of half cell potential surveys, cover surveys, delamination/soundness surveys and exposing reinforcement shall be the area surveyed or exposed.

The measurement of other surveys tests and examinations shall be the number of surveys tests and examinations performed.

Itemisation

15 Separate items shall be provided for structural investigations in accordance with Chapter II paragraphs 3 and 4 and the following:

Group	Feature	
I	1	Surveys.
	2	Tests.
	3	Examinations and assessments.

	II	Different types.

Structural Investigations

16 The items for structural investigations shall in accordance with the Preambles to Schedule of Rates and Prices General Directions include for:

Item coverage

(a) obtaining samples,

(b) protecting and storing samples,

(c) labelling, packaging and delivery of samples to the laboratory,

(d) testing at an accredited laboratory,

(e) recording data analysing interpreting and reporting,

(f) supplying the Overseeing Organisation with advance copies of the results,

(g) supplying the Overseeing Organisation with copies of the data and reports,

(h) disposal of material (as Series 600 paragraph 39),

(i) reinstatement.

Falling Weight Deflectometer Tests

Units

17 The unit of measurement shall be:

(i) falling weight deflectometer test ..……... number.

Measurement

18 The measurement of falling weight deflectometer tests shall be for the complete operation.

Itemisation

19 Separate items shall be provided for falling weight deflectometer in accordance with Chapter II paragraphs 3 and 4 and the following:

Group	Feature	
I	1	Falling weight deflectometer tests.
II	1	Location.

Falling Weight Deflectometer Tests

20 The items for falling weight deflectometer tests shall in accordance with the Preambles to Schedule of Rates and Prices General Directions include for:

Item coverage

(a) temperature measurements including repairs to pavement,

(b) recording required data analysing interpretation and supplying the Overseeing Organisation with a copy of the data and reports.

Dynamic Cone Penetrometer Tests

Units

21 The unit of measurement shall be:

(a) dynamic cone penetrometer testing of unbound carriageway sub-base, capping layer, subgrade and verges ..... number.

Measurement

22 The measurement of dynamic cone penetrometer tests of unbound carriageway sub-base, capping layer, subgrade and verges shall be for the complete operation.

Itemisation

23 Separate items shall be provided for dynamic cone penetrometer tests of unbound carriageway sub-base, capping layer, subgrade and verges in accordance with Chapter II paragraphs 3 and 4 and the following:

Group	Feature	
I	1	Dynamic cone penetrometer testing of unbound carriageway sub-base, capping layer, subgrade and verges.

Dynamic Cone Penetrometer Tests of Unbound Carriageway Sub-base/Capping Layer/Subgrade and Verges

24 The items for dynamic cone penetrometer tests of unbound carriageway sub-base, capping layer, subgrade and verges shall in accordance with the Preambles to Schedule of Rates and Prices General Directions include for:

Item coverage

(a) drilling or coring,

(b) repeating failed tests,

(c) recording data, analysing, interpreting and reporting,

(d) supplying the Overseeing Organisation with copies of the data and reports,

(e) disposal of material (as Series 600 paragraph 39),

(f) reinstatement.

SCOTTISH MINISTERS' REQUIREMENTS

SCHEDULE 2 PART 1

METHOD OF MEASUREMENT

SERIES 5000: MAINTENANCE PAINTING OF STEELWORK

Surface Preparation and Protective System

Itemisation

In paragraph 4 delete Groups III, V and VI, and amend the Note at the bottom of the paragraph to 'Group IV shall be applied only to Group II Feature 1'.

Re-number Group IV as Group III and insert new Group IV.

Group	Feature	
IV	1	Forth Road Bridge approach viaducts
	2	Other locations

Surface preparation

Item coverage

In paragraph 5 delete sub paragraph (h) and substitute the following:

(h) abrading and bevelling of edges into sound and firmly adhering material,

In paragraph 5 add the following:

(n) merging with existing treatment,

(o) access, excluding provision, operation and maintenance of access for Feature 1 – Forth Road Bridge approach viaducts.

Protective system

Item coverage

In paragraph 6 add the following:

(d) merging with existing treatment,

(e) marking and lettering,

(f) access, excluding provision, operation and maintenance of access for Feature 1 – Forth Road Bridge approach viaducts.

After paragraph 6 insert the following paragraphs

Application of Gulf Metalcoat to hangers and main cable hand strands of Forth Road Bridge

Units

7 The Units of measurement for surface preparation and protective system comprising Gulf Metalcoat to hangers and main cable hand strands of Forth Road Bridge shall be:

(i) surface preparation and protective system comprising Gulf Metalcoat to hangers and main cable handstrands……. linear metre

Measurement 8 The measurement of surface preparation and protective system comprising Gulf Metalcoat shall be the length of the hangers and main cable handstrands.

Itemisation 9 Separate items shall be provided for surface preparation and protective system comprising Gulf Metalcoat to hangers and main cable hand strands of Forth Road Bridge in accordance with Chapter II paragraphs 3 and 4 and the following:

Group	Feature	
I	1	surface preparation,
	2	Protective system comprising Gulf Metalcoat.
II	1	Different methods
III	1	Forth Road Bridge hangers
	2	Forth Road Bridge main cable handstrands

Application of Gulf Metalcoat to hangers 10 The items for surface preparation and protective system comprising Gulf Metalcoat to hangers and main cable hand strands of Forth Road Bridge shall in accordance with the Preambles to Schedule of Rates and Prices General Directions include for:

Item coverage

(a) provision of suspended platform,

(b) operation and maintenance of suspended platform,

(c) trial on a low level suspender location,

(d) provision of radio communication,

(e) mechanical agitation of paint,

(f) provision of safe accesses to cradles,

(g) operation of cradles,

(h) prevention of paint drips from falling onto live traffic,

(i) surface preparation of cables,

(j) application by hand using either brush or suitable-lined gloves,

(k) brushes to be secured with small lanyard and attached to person or cradle prior to painting.

SCOTTISH MINISTERS' REQUIREMENTS

SCHEDULE 2 PART 1

METHOD OF MEASUREMENT

SERIES 6100: CORE OPERATIONS MONTHLY SUMS

Core Operations Monthly Sums

Definitions	1	Except for mobilisation, which is to be paid in accordance with Series 100, the Core Operations to be provided under this Contract shall be measured in accordance with this Series.
	2	Any Operations that are additional to Core Operations will be subject to an Order and shall be measured in accordance with the appropriate Series in this Schedule of Rates and Prices.
Units	3	The units of measurement shall be: (i) management, inspection and maintenance Core Operations ...……....month.
Measurement	4	The measurement of: (i) inspections and safety patrols, (ii) Detailed Inspections, (iii) Repair of Category 1 Defects of value of repair not more than £10,000, (iv) Drainage System linear drainage systems, (v) Drainage System gullies, catchpits, interceptors, soakaways, manholes and oil separators, (vi) Drainage System drainage grips, (vii) Drainage System filter material, (viii) high, medium, low and minimal frequency grass cutting, (ix) vehicle restraint systems, (x) road traffic signs, (xi) Incident Response Operations of value not more than £10,000, that have a Payment Adjustment Factor for each month, shall be 1 multiplied by the Payment Adjustment Factor (Detailed in Schedule 5 Part 6, Annex C) for that month. The measurement of populate network inventory shall not exceed a cumulative total of 12 months. Measurement will only be permitted during the 12 month period following Commencement of Service

Date 1 for Network 1 and Commencement of Service Date 2 for Network 2.

The measurement of items which are described as "Extra over" other items shall be measured for the duration of Service Delivery Period 2 only.

Itemisation 5 Separate items shall be provided for management, inspection and maintenance operations in accordance with Chapter II paragraphs 3 and 4 and the following:

Group	Feature	
I	1	Schedule and Part number.
	2	Extra over Schedule and Part number.
II	1	Different management, inspection and maintenance Operations.

Provide, Maintain and Update Register of staff and Professional Services staff 6 The item for provide, maintain and update register of staff and Professional Services staff shall in accordance with the Preambles to the Schedule of Rates and Prices General Directions include for:

Item coverage

(a) compliance with Clause 4.2 of Schedule 1 Part 1 excluding all additional Operations required for Service Delivery Period 2.

Extra over Provide, Maintain and Update Register of staff and Professional Services staff 7 The item for extra over provide, maintain and update register of staff and Professional Services staff shall in accordance with the Preambles to the Schedule of Rates and Prices General Directions include for:

Item coverage

(a) compliance with Clause 4.2 of Schedule 1 Part 1 for all additional Operations required for Service Delivery Period 2.

Overall Requirements 8 The item for overall requirements shall in accordance with the Preambles to the Schedule of Rates and Prices General Directions include for:

Item coverage

(a) compliance with Schedule 3 Part 1 excluding all additional Operations required for Service Delivery Period 2.

Extra over Overall Requirements 9 The item for extra over overall requirements shall in accordance with the Preambles to the Schedule of Rates and Prices General Directions include for:

Item coverage

(a) compliance with Schedule 3 Part 1 for all additional Operations required for Service Delivery Period 2.

Extent of the Unit 10 The item for the extent of the Unit shall in accordance with the Preambles to the Schedule of Rates and Prices General Directions include for:

Item coverage

(a) compliance with Schedule 3 Part 2 excluding all additional Operations required for Service Delivery Period 2.

Extra over Extent of the Unit	11	The item for extra over the extent of the Unit shall in accordance with the Preambles to the Schedule of Rates and Prices General Directions include for: (a) compliance with Schedule 3 Part 2 for all additional Operations required for Service Delivery Period 2.
Reference Documents	12	The item for the reference documents shall in accordance with the Preambles to the Schedule of Rates and Prices General Directions include for:
Item coverage		(a) compliance with Schedule 3 Part 3 excluding all additional Operations required for Service Delivery Period 2.
Extra over Reference Documents	13	The item for extra over the reference documents shall in accordance with the Preambles to the Schedule of Rates and Prices General Directions include for:
Item coverage		(a) compliance with Schedule 3 Part 3 for all additional Operations required for Service Delivery Period 2.
Other Contracts within the Unit	14	The item for other contracts within the Unit shall in accordance with the Preambles to Schedule of Rates and Prices General Directions include for:
Item coverage		(a) compliance with Schedule 3 Part 4 excluding all additional Operations required for Service Delivery Period 2. Where the Director appoints the Operating Company to procure or manage a Works Contracts which the previous operating company or FETA was procuring or managing the Operating Company shall be paid separately under Series 6200.
Extra over Other Contracts within the Unit	15	The item for extra over other contracts within the Unit shall in accordance with the Preambles to Schedule of Rates and Prices General Directions include for:
Item coverage		(a) compliance with Schedule 3 Part 4 for all additional Operations required for Service Delivery Period 2. Where the Director appoints the Operating Company to procure or manage a Works Contracts which the previous operating company or FETA was procuring or managing the Operating Company shall be paid separately under Series 6200.
Communications Strategy, Correspondence Enquiries and Complaints	16	The item for communications strategy, correspondence, enquiries and complaints shall in accordance with the Preambles to Schedule of Rates and Prices General Directions include for:
Item coverage		(a) compliance with Schedule 3 Part 5 excluding all additional Operations required for Service Delivery Period 2.

Extra over Communications Strategy, Correspondence Enquiries and Complaints	17	The item for extra over communications strategy, correspondence, enquiries and complaints shall in accordance with the Preambles to Schedule of Rates and Prices General Directions include for:
Item coverage		(a) compliance with Schedule 3 Part 5 for all additional Operations required for Service Delivery Period 2.
Customer Contact Services	18	The item for customer contact services shall in accordance with the Preambles to the Schedule of Rates and Prices General Directions include for:
Item coverage		(a) compliance with Schedule 3 Part 6 excluding all additional Operations required for Service Delivery Period 2.
Extra over Customer Contact Services	19	The item for extra over customer contact services shall in accordance with the Preambles to the Schedule of Rates and Prices General Directions include for:
Item coverage		(a) compliance with Schedule 3 Part 6 for all additional Operations required for Service Delivery Period 2.
Network Operations Services	20	The item for network operations services shall in accordance with the Preambles to the Schedule of Rates and Prices General Directions include for:
Item coverage		(a) compliance with Schedule 3 Part 7 excluding all additional Operations required for Service Delivery Period 2.
Extra over Network Operations Services	21	The item for extra over network operations services shall in accordance with the Preambles to the Schedule of Rates and Prices General Directions include for:
Item coverage		(a) compliance with Schedule 3 Part 7 for all additional Operations required for Service Delivery Period 2.
Statutory Functions	22	The item for Statutory Functions shall in accordance with the Preambles to Schedule of Rates and Prices General Directions include for:
Item coverage		(a) compliance with Schedule 3 Part 8 excluding all additional Operations required for Service Delivery Period 2.
Extra over Statutory Functions	23	The item for extra over Statutory Functions shall in accordance with the Preambles to Schedule of Rates and Prices General Directions include for:
Item coverage		(a) compliance with Schedule 3 Part 8 for all additional Operations required for Service Delivery Period 2.

Collaboration Requirements	24	The item for collaboration requirements shall in accordance with the Preambles to Schedule of Rates and Prices General Directions include for:
Item coverage		(a) compliance with Schedule 3 Part 9 excluding all additional Operations required for Service Delivery Period 2.
Extra over Collaboration Requirements	25	The item for extra over collaboration requirements shall in accordance with the Preambles to Schedule of Rates and Prices General Directions include for:
Item coverage		(a) compliance with Schedule 3 Part 9 for all additional Operations required for Service Delivery Period 2.
Partnering	26	The item for partnering shall in accordance with the Preambles to Schedule of Rates and Prices General Directions include for:
Item coverage		(a) compliance with Schedule 3 Part 10 excluding all additional Operations required for Service Delivery Period 2.
Extra over Partnering	27	The item for extra over partnering shall in accordance with the Preambles to Schedule of Rates and Prices General Directions include for:
Item coverage		(a) compliance with Schedule 3 Part 10 for all additional Operations required for Service Delivery Period 2.
Community Benefits	28	The item for community benefits shall in accordance with the Preambles to Schedule of Rates and Prices General Directions include for:
Item coverage		(a) compliance with Schedule 3 Part 11 excluding all additional Operations required for Service Delivery Period 2.
Extra over Community Benefits	29	The item for extra over community benefits shall in accordance with the Preambles to Schedule of Rates and Prices General Directions include for:
Item coverage		(a) compliance with Schedule 3 Part 11 for all additional Operations required for Service Delivery Period 2.
Financial and Contract Management	30	The item for financial and contract management shall in accordance with the Preambles to the Schedule of Rates and Prices General Directions include for:
Item coverage		24. (a) compliance with Schedule 4 Part 1 excluding all additional Operations required for Service Delivery Period 2 and excluding provision of resources for Integrated Roads Information System measured as mobilisation under Series 100. (b) compliance with paragraph 4.32.2 of Schedule 7 Part 1.

Extra over Financial and Contract Management	31	The item for extra over financial and contract management shall in accordance with the Preambles to the Schedule of Rates and Prices General Directions include for:
Item coverage		a) compliance with Schedule 4 Part 1 for all additional Operations required for Service Delivery Period 2 excluding provision of resources for Integrated Roads Information System measured as mobilisation under Series 100. (b) compliance with paragraph 4.32.2 of Schedule 7 Part 1.
Integrated Roads Information System	32	The item for Integrated Roads Information System shall in accordance with the Preambles to the Schedule of Rates and Prices General Directions include for:
Item coverage		(a) compliance with Schedule 4 Part 2 excluding paragraph 2.4 and excluding all additional Operations required for Service Delivery Period 2.
Extra over Integrated Roads Information System	33	The item for extra over Integrated Roads Information System shall in accordance with the Preambles to the Schedule of Rates and Prices General Directions include for:
Item coverage		(a) compliance with Schedule 4 Part 2 excluding paragraph 2.4 for all additional Operations required for Service Delivery Period 2.
Inventory Requirements	34	The item for inventory requirements shall in accordance with the Preambles to the Schedule of Rates and Prices General Directions include for:
Item coverage		(a) compliance with paragraph 2.4 of Schedule 4 Part 2, and excluding all additional Operations required for Service Delivery Period 2.
Extra over Inventory Requirements	35	The item for extra over inventory requirements shall in accordance with the Preambles to the Schedule of Rates and Prices General Directions include for:
Item coverage		(a) compliance with paragraph 2.4 of Schedule 4 Part 2, , for all additional Operations required for Service Delivery Period 2.
Roadside Electrical Assets, and Power Supplies	36	The item for roadside electrical assets and power supplies shall in accordance with the Preambles to the Schedule of Rates and Prices General Directions include for:
Item coverage		(a) compliance with Schedule 4 Part 3 excluding all additional Operations required for Service Delivery Period 2.
Extra over Roadside Electrical Assets, and Power Supplies	37	The item for extra over roadside electrical assets and power supplies shall in accordance with the

		Preambles to the Schedule of Rates and Prices General Directions include for:
Item coverage		(a) compliance with Schedule 4 Part 3 for all additional Operations required for Service Delivery Period 2.
Damage To Crown Property and Third Party Claims	38	The item for Damage to Crown Property and third party claims shall in accordance with the Preambles to the Schedule of Rates and Prices General Directions include for:
Item coverage		(a) compliance with Schedule 4 Part 4, excluding paragraph 3.2,
Repair of Damage to Crown Property of Value of Repairs of not more than £50,000	39	The item for repair of Damage to Crown Property of value of repairs of not more than £50,000 shall in accordance with the Preambles to the Schedule of Rates and Prices General Directions include for:
Item coverage		(a) initial, secondary, and back-up Incident Response Operations, (b) temporary repairs and temporary safety measures to allow safety and usability to be restored, (c) compliance with paragraph 3.2 of Schedule 4 Part 4, excluding removal of graffiti, (d) police reports, (e) establishing, maintaining and removing traffic management while the Design and Operations are completed to allow the repair to be executed, (f) recovery of the costs of repair of the damage to Crown Property from the third party which caused the damage, (g) betterment, (h) assessment and Design, (i) non-recovery of any costs of repair from any third party including the Motor Insurance Bureau.
Management System	40	The item for management system shall in accordance with the Preambles to the Schedule of Rates and Prices General Directions include for:
Item coverage		(a) compliance with Schedule 5 Part 1 and paragraph 1.10 of Schedule 7 Part 1 excluding all additional Operations required for Service Delivery Period 2.
Extra over Management System	41	The item for extra over management system shall in accordance with the Preambles to the Schedule of Rates and Prices General Directions include for:
Item coverage		(a) compliance with Schedule 5 Part 1 and paragraph 1.10 of Schedule 7 Part 1 for all

		additional Operations required for Service Delivery Period 2.
Records, Information and communication Technology	42	The item for records, information and communication technology shall in accordance with the Preambles to Schedule of Rates and Prices General Directions include for:
Item coverage		(a) compliance with Schedule 5 Part 2 excluding all additional Operations required for Service Delivery Period 2.
Extra over Records, Information and communication Technology	43	The item for extra over records, information and communication technology shall in accordance with the Preambles to Schedule of Rates and Prices General Directions include for:
Item coverage		(a) compliance with Schedule 5 Part 2 for all additional Operations required for Service Delivery Period 2.
Reporting and Submission Requirements and Progress Meetings	44	The item for reporting and submission requirements and progress meetings shall in accordance with the Preambles to Schedule of Rates and Prices General Directions include for:
Item coverage		(a) compliance with Schedule 5 Part 3 excluding all additional Operations required for Service Delivery Period 2.
Extra over Reporting and Submission Requirements and Progress Meetings	45	The item for extra over reporting and submission requirements and progress meetings shall in accordance with the Preambles to Schedule of Rates and Prices General Directions include for:
Item coverage		(a) compliance with Schedule 5 Part 3 for all additional Operations required for Service Delivery Period 2.
Operating Company's Representative, Core Management Team and Key Staff	46	The item for Operating Company's Representative, Core Management Team and Key Staff shall in accordance with the Preambles to Schedule of Rates and Prices General Directions include for:
Item coverage		(a) compliance with Schedule 5 Part 4 excluding all additional Operations required for Service Delivery Period 2.
Extra over Operating Company's Representative, Core Management Team and Key Staff	47	The item for extra over Operating Company's Representative, Core Management Team and Key Staff shall in accordance with the Preambles to Schedule of Rates and Prices General Directions include for:
Item coverage		(a) compliance with Schedule 5 Part 4 for all additional Operations required for Service Delivery Period 2.
Audits by the Performance Audit Group	48	The item for audits by the Performance Audit Group shall in accordance with the Preambles to Schedule of Rates and Prices General Directions include for:
Item coverage		(a) compliance with Schedule 5 Part 5.

Performance Measurement	49	The item for performance measurement shall in accordance with the Preambles to Schedule of Rates and Prices General Directions include for:
Item coverage		(a) compliance with Schedule 5 Part 6 excluding all additional Operations required for Service Delivery Period 2.
Extra over Performance Measurement	50	The item for extra over performance measurement shall in accordance with the Preambles to Schedule of Rates and Prices General Directions include for:
Item coverage		(a) compliance with Schedule 5 Part 6 for all additional Operations required for Service Delivery Period 2.
Operating Company's Offices and Depots	51	The item for Operating Company's offices and depots shall in accordance with the Preambles to Schedule of Rates and Prices General Directions include for:
Item coverage		(a) compliance with Schedule 5 Part 7 excluding all additional Operations required for Service Delivery Period 2 and excluding all of the buildings and areas of land being leased to the Operating Company which do not form part of the Unit and which shall be subject to a separate lease agreement(s) between the Scottish Ministers and the Operating Company.
Extra over Operating Company's Offices and Depots	52	The item for extra over Operating Company's offices and depots shall in accordance with the Preambles to Schedule of Rates and Prices General Directions include for:
Item coverage		(a) compliance with Schedule 5 Part 7 for all additional Operations required for Service Delivery Period 2 excluding all of the buildings and areas of land being leased to the Operating Company which do not form part of the Unit and which shall be subject to a separate lease agreement(s) between the Scottish Ministers and the Operating Company.
Environmental Sustainability and Waste	53	The item for environmental sustainability and waste shall in accordance with the Preambles to the Schedule of Rates and Prices General Directions include for:
Item coverage		(a) compliance with Schedule 5 Part 8 excluding all additional Operations required for Service Delivery Period 2.
Extra over Environmental Sustainability and Waste	54	The item for extra over environmental sustainability and waste shall in accordance with the Preambles to the Schedule of Rates and Prices General Directions include for:
Item coverage		(a) compliance with Schedule 5 Part 8 for all additional Operations required for Service Delivery Period 2.

Procurement and Management of Schemes	55	The item for procurement and management of schemes shall in accordance with the Preambles to Schedule of Rates and Prices General Directions include for:
Item coverage		(a) compliance with Schedule 6 Part 1 excluding procurement and management of Works Contracts measured under Series 6300.
Construction (Design and Management) Regulations 2007	56	The item for *Construction (Design and Management) Regulations 2007* shall in accordance with the Preambles to Schedule of Rates and Prices General Directions include for:
Item coverage		(a) compliance with Schedule 6 Part 2 excluding all additional Operations required for Service Delivery Period 2.
Extra over Construction (Design and Management) Regulations 2007	57	The item for extra *over Construction (Design and Management*) *Regulations 2007* shall in accordance with the Preambles to Schedule of Rates and Prices General Directions include for:
Item coverage		(a) compliance with Schedule 6 Part 2 for all additional Operations required for Service Delivery Period 2.
Road Safety Audits	58	The item for road safety audits shall in accordance with the Preambles to Schedule of Rates and Prices General Directions include for:
Item coverage		(a) compliance with Schedule 6 Part 3 excluding all additional Operations required for Service Delivery Period 2.
Extra over Road Safety Audits	59	The item for extra over road safety audits shall in accordance with the Preambles to Schedule of Rates and Prices General Directions include for:
Item coverage		(a) compliance with Schedule 6 Part 3 for all additional Operations required for Service Delivery Period 2.
Design	60	The item for Design shall in accordance with the Preambles to Schedule of Rates and Prices General Directions include for:
Item coverage		(a) compliance with Schedule 6 Part 4 excluding all additional Operations required for Service Delivery Period 2.
Extra over Design	61	The item for extra over Design shall in accordance with the Preambles to Schedule of Rates and Prices General Directions include for:
Item coverage		(a) compliance with Schedule 6 Part 4 for all additional Operations required for Service Delivery Period 2.
Routine Maintenance and Management Function	62	The item for Routine Maintenance and Management Function shall in accordance with the Preambles to Schedule of Rates and Prices General Directions include for:

Item coverage		(a) compliance with paragraph 1.2 of Schedule 7 Part 1 excluding all additional Operations required for Service Delivery Period 2.
Extra over Routine Maintenance and Management Function	63	The item for extra over Routine Maintenance and Management Function shall in accordance with the Preambles to Schedule of Rates and Prices General Directions include for:
Item coverage		(a) compliance with paragraph 1.2 of Schedule 7 Part 1 for all additional Operations required for Service Delivery Period 2.
Defect Categories and Response Times	64	The item for Defect categories and response times shall in accordance with the Preambles to Schedule of Rates and Prices General Directions include for:
Item coverage		(a) compliance with paragraph 2 of Schedule 7 Part 1, excluding permanent repair Operations, and excluding all additional Operations required for Service Delivery Period 2.
Extra over Defect Categories and Response Times	65	The item for extra over defect categories and response times shall in accordance with the Preambles to Schedule of Rates and Prices General Directions include for:
Item coverage		(a) compliance with paragraph 2 of Schedule 7 Part 1, excluding permanent repair Operations, for all additional Operations required for Service Delivery Period 2.
Hazard Notices and Observations Identified by Performance Audit Group	66	The item for Hazard Notices and observations identified by Performance Audit Group shall in accordance with the Preambles to Schedule of Rates and Prices General Directions include for:
Item coverage		(a) compliance with paragraph 3 of Schedule 7 Part 1 excluding all additional Operations required for Service Delivery Period 2.
Extra over Hazard Notices and Observations Identified by Performance Audit Group	67	The item for extra over Hazard Notices and observations identified by Performance Audit Group shall in accordance with the Preambles to Schedule of Rates and Prices General Directions include for:
Item coverage		(a) compliance with paragraph 3 of Schedule 7 Part 1 for all additional Operations required for Service Delivery Period 2.
Inspections and Safety Patrols	68	The item for inspections and safety patrols shall in accordance with the Preambles to Schedule of Rates and Prices General Directions include for:

Item coverage		(a) compliance with all Safety Inspections, Safety Patrols, ad-hoc inspections and Audit Inspection requirements of Schedule 7 Part 1, (b) compliance with paragraphs 1.1.7 to 1.1.10 of Schedule 7 Part 1, (c) entering any Defects identified into the system in paragraph 1.1.7 of Schedule 7 Part 1 within the timescales stated in Schedule 7 Part 1, excluding all additional Operations required for Service Delivery Period 2.
Extra over Inspections and Safety Patrols	69	The item for extra over inspections and safety patrols shall in accordance with the Preambles to Schedule of Rates and Prices General Directions include for:
Item coverage		a) compliance with all Safety Inspections, Safety Patrols, ad-hoc inspections and Audit Inspection requirements of Schedule 7 Part 1, (b) compliance with paragraphs 1.1.7 to 1.1.10 of Schedule 7 Part 1, (c) entering any Defects identified into the system in paragraph 1.1.7 of Schedule 7 Part 1 within the timescales stated in Schedule 7 Part 1, for all additional Operations required for Service Delivery Period 2.
Repair of Category 1 Defects of Value Not More Than £10,000	70	The item for Repair of Category 1 Defects of value of repairs not more than £10,000 shall in accordance with the Preambles to Schedule of Rates and Prices General Directions include for:
Item coverage		(a) compliance with paragraph 2, Schedule 7 Part 1, in respect of permanent repair Operations of value not more than £10,000, (b) the cost of maintaining temporary repairs, (c) all traffic management required in connection with making safe and the repair of a Category 1 Defect, (d) travel to and from the scene of the Category 1 Defect, (e) reporting to the Director details of all Operations carried out and materials used, (f) disruption to other work as a result of attending Category 1 Defects, (g) attending a reported Category 1 Defect where no defect is found, (h) Professional Services and Design, excluding all additional Operations required for Service Delivery Period 2.

Extra over Repair of Category 1 Defects of Value Not More Than £10,000

71 The item for extra over Repair of Category 1 Defects of value of repairs not more than £10,000 shall in accordance with the Preambles to Schedule of Rates and Prices General Directions include for:

Item coverage

(a) compliance with paragraph 2, Schedule 7 Part 1, in respect of permanent repair Operations of value not more than £10,000,

(b) the cost of maintaining temporary repairs,

(c) all traffic management required in connection with making safe and the repair of a Category 1 Defect,

(d) travel to and from the scene of the Category 1 Defect,

(e) reporting to the Director details of all Operations carried out and materials used,

(f) disruption to other work as a result of attending Category 1 Defects,

(g) attending a reported Category 1 Defect where no defect is found,

(h) Professional Services and Design,

for all additional Operations required for Service Delivery Period 2.

Detailed Inspections

72 The item for Detailed Inspections shall in accordance with the Preambles to Schedule of Rates and Prices General Directions include for:

Item coverage

(a) compliance with all Detailed Inspection requirements of Schedule 7 Part 1, excluding paragraphs 1.8.14 and 1.8.15 in respect of inventory validation, and excluding all additional Operations required for Service Delivery Period 2.

(b) reports and recording of results and data in routine maintenance and management function of the Integrated Roads and Information System excluding all additional Operations required for Service Delivery Period 2.

Extra over Detailed Inspections

73 The item for extra over Detailed Inspections shall in accordance with the Preambles to Schedule of Rates and Prices General Directions include for:

Item coverage

(a) compliance with all Detailed Inspection requirements of Schedule 7 Part 1, excluding paragraphs 1.8.14 and 1.8.15 in respect of inventory validation, for all additional Operations required for Service Delivery Period 2.

(b) reports and recording of results and data in routine maintenance and management function of the Integrated Roads and

		Information System for all additional Operations required for Service Delivery Period 2.
Carriageway	74	The item for carriageway shall in accordance with the Preambles to Schedule of Rates General Directions include for:
Item coverage		(a) compliance with paragraph 4.1 of Schedule 7 Part 1 excluding Detailed Inspections and excluding all additional Operations required for Service Delivery Period 2.
Extra over Carriageway	75	The item for extra over carriageway shall in accordance with the Preambles to Schedule of Rates General Directions include for:
Item coverage		(a) compliance with paragraph 4.1 of Schedule 7 Part 1 excluding Detailed Inspections, for all additional Operations required for Service Delivery Period 2.
Pedestrian and Cycle Facilities	76	The item for pedestrian and cycle facilities shall in accordance with the Preambles to Schedule of Rates General Directions include for:
Item coverage		(a) compliance with paragraph 4.2 of Schedule 7 Part 1 excluding Detailed Inspections and excluding all additional Operations required for Service Delivery Period 2.
Extra over Pedestrian and Cycle Facilities	77	The item for extra over pedestrian and cycle facilities shall in accordance with the Preambles to Schedule of Rates General Directions include for:
Item coverage		(a) compliance with paragraph 4.2 of Schedule 7 Part 1 excluding Detailed Inspections, for all additional Operations required for Service Delivery Period 2.
Covers, Gratings and Frames	78	The item for covers, gratings and frame shall in accordance with the Preambles to Schedule of Rates General Directions include for:
Item coverage		(a) compliance with paragraph 4.3 of Schedule 7 Part 1 excluding Detailed Inspections and excluding all additional Operations required for Service Delivery Period 2.
Extra over Covers, Gratings and Frames	79	The item for extra over covers, gratings and frame shall in accordance with the Preambles to Schedule of Rates General Directions include for:
Item coverage		(a) compliance with paragraph 4.3 of Schedule 7 Part 1 excluding Detailed Inspections, for all additional Operations required for Service Delivery Period 2.
Kerbs, Channels Edgings and Quadrants	80	The item for kerbs, channels, edgings and quadrants shall in accordance with the Preambles to Schedule of Rates and Prices General Directions include for:

Item coverage		(a) compliance with paragraph 4.4 of Schedule 7 Part 1 excluding Detailed Inspections and excluding all additional Operations required for Service Delivery Period 2.
Extra over Kerbs, Channels Edgings and Quadrants	81	The item for extra over kerbs, channels, edgings and quadrants shall in accordance with the Preambles to Schedule of Rates and Prices General Directions include for:
Item coverage		(a) compliance with paragraph 4.4 of Schedule 7 Part 1 excluding Detailed Inspections, for all additional Operations required for Service Delivery Period 2.
Linear Drainage Systems	82	The item for linear drainage systems shall in accordance with the Preambles to Schedule of Rates and Prices General Directions include for:
Item coverage		(a) compliance with paragraph 4.5 of Schedule 7 Part 1 excluding Detailed Inspections and excluding all additional Operations required for Service Delivery Period 2.
Extra over Linear Drainage Systems	83	The item for extra over linear drainage systems shall in accordance with the Preambles to Schedule of Rates and Prices General Directions include for:
Item coverage		(a) compliance with paragraph 4.5 of Schedule 7 Part 1 excluding Detailed Inspections, for all additional Operations required for Service Delivery Period 2.
Gullies, Catchpits, Interceptors, Soakaways, Manholes and Oil Separators	84	The item for gullies, catchpits, interceptors, soakaways, manholes and oil separators shall in accordance with the Preambles to Schedule of Rates and Prices General Directions include for:
Item coverage		(a) compliance with paragraph 4.6 of Schedule 7 Part 1 excluding Detailed Inspections and excluding all additional Operations required for Service Delivery Period 2.
Extra over Gullies, Catchpits, Interceptors, Soakaways, Manholes and Oil Separators	85	The item for extra over gullies, catchpits, interceptors, soakaways, manholes and oil separators shall in accordance with the Preambles to Schedule of Rates and Prices General Directions include for:
Item coverage		(a) compliance with paragraph 4.6 of Schedule 7 Part 1 excluding Detailed Inspections, for all additional Operations required for Service Delivery Period 2.
Drainage Grips	86	The item for drainage grips shall in accordance with the Preambles to Schedule of Rates and Prices General Directions include for:
Item coverage		(a) compliance with paragraph 4.7 of Schedule 7 Part 1 excluding Detailed Inspections and

excluding all additional Operations required for Service Delivery Period 2.

Extra over Drainage Grips	87	The item for extra over drainage grips shall in accordance with the Preambles to Schedule of Rates and Prices General Directions include for:
Item coverage		(a) compliance with paragraph 4.7 of Schedule 7 Part 1 excluding Detailed Inspections, for all additional Operations required for Service Delivery Period 2.
Ditches	88	The item for ditches shall in accordance with the Preambles to Schedule of Rates and Prices General Directions include for:
Item coverage		(a) compliance with paragraph 4.8 of Schedule 7 Part 1 excluding Detailed Inspections and excluding all additional Operations required for Service Delivery Period 2.
Extra over Ditches	89	The item for extra over ditches shall in accordance with the Preambles to Schedule of Rates and Prices General Directions include for:
Item coverage		(a) compliance with paragraph 4.8 of Schedule 7 Part 1 excluding Detailed Inspections, for all additional Operations required for Service Delivery Period 2.
Filter Material	90	The item for filter material shall in accordance with the Preambles to Schedule of Rates and Prices General Directions include for:
Item coverage		(a) compliance with paragraph 4.9 of Schedule 7 Part 1 excluding Detailed Inspections and excluding all additional Operations required for Service Delivery Period 2.
Extra over Filter Material	91	The item for extra over filter material shall in accordance with the Preambles to Schedule of Rates and Prices General Directions include for:
Item coverage		(a) compliance with paragraph 4.9 of Schedule 7 Part 1 excluding Detailed Inspections, for all additional Operations required for Service Delivery Period 2.
Drainage Structures	92	The item for drainage Structures shall in accordance with the Preambles to Schedule of Rates and Prices General Directions include for:
Item coverage		(a) compliance with paragraph 4.10 of Schedule 7 Part 1 excluding Detailed Inspections and excluding all additional Operations required for Service Delivery Period 2.
Extra over Drainage Structures	93	The item for extra over drainage Structures shall in accordance with the Preambles to Schedule of Rates and Prices General Directions include for:
Item coverage		(a) compliance with paragraph 4.10 of Schedule 7 Part 1 excluding Detailed Inspections, for

		all additional Operations required for Service Delivery Period 2.
Balancing Ponds	94	The item for balancing ponds shall in accordance with the Preambles to Schedule of Rates and Prices General Directions include for:
Item coverage		(a) compliance with paragraph 4.11 of Schedule 7 Part 1 excluding Detailed Inspections and excluding all additional Operations required for Service Delivery Period 2.
Extra over Balancing Ponds	95	The item for extra over balancing ponds shall in accordance with the Preambles to Schedule of Rates and Prices General Directions include for:
Item coverage		(a) compliance with paragraph 4.11 of Schedule 7 Part 1 excluding Detailed Inspections, for all additional Operations required for Service Delivery Period 2.
Ancillary Drainage Items	96	The item for ancillary drainage items shall in accordance with the Preambles to Schedule of Rates and Prices General Directions include for:
Item coverage		(a) compliance with paragraph 4.12 of Schedule 7 Part 1 excluding Detailed Inspections and excluding all additional Operations required for Service Delivery Period 2.
Extra over Ancillary Drainage Items	97	The item for extra over ancillary drainage items shall in accordance with the Preambles to Schedule of Rates and Prices General Directions include for:
Item coverage		(a) compliance with paragraph 4.12 of Schedule 7 Part 1 excluding Detailed Inspections, for all additional Operations required for Service Delivery Period 2.
Communications and Miscellaneous Equipment	98	The item for communications and miscellaneous equipment shall in accordance with the Preambles to Schedule of Rates and Prices General Directions include for:
Item coverage		(a) compliance with paragraph 4.13 of Schedule 7 Part 1 excluding all additional Operations required for Service Delivery Period 2.
Extra over Communications and Miscellaneous Equipment	99	The item for extra over communications and miscellaneous equipment shall in accordance with the Preambles to Schedule of Rates and Prices General Directions include for:
Item coverage		a) compliance with paragraph 4.13 of Schedule 7 Part 1 for all additional Operations required for Service Delivery Period 2.
Geotechnical Assets	100	The item for geotechnical assets shall in accordance with the Preambles to Schedule of Rates and Prices General Directions include for:
Item coverage		(a) compliance with paragraph 4.14 of Schedule 7 Part 1 excluding Detailed Inspections and

excluding all additional Operations required for Service Delivery Period 2.

Extra over Geotechnical Assets

101 The item for extra over geotechnical assets shall in accordance with the Preambles to Schedule of Rates and Prices General Directions include for:

Item coverage

(a) compliance with paragraph 4.14 of Schedule 7 Part 1 excluding Detailed Inspections, for all additional Operations required for Service Delivery Period 2.

Grassed Areas

102 The items for grassed areas shall in accordance with the Preambles to Schedule of Rates and Prices General Directions include for:

Item coverage

(a) compliance with paragraph 4.15 of Schedule 7 Part 1 excluding Detailed Inspections and excluding all additional Operations required for Service Delivery Period 2.

Extra over Grassed Areas

103 The items for extra over grassed areas shall in accordance with the Preambles to Schedule of Rates and Prices General Directions include for:

Item coverage

(a) compliance with paragraph 4.15 of Schedule 7 Part 1 excluding Detailed Inspections, for all additional Operations required for Service Delivery Period 2.

Bulb and Wildflower Areas

104 The item for bulb and wildflower areas shall in accordance with the Preambles to Schedule of Rates and Prices General Directions include for:

Item coverage

(a) compliance with paragraph 4.16 of Schedule 7 Part 1 excluding Detailed Inspections and excluding all additional Operations required for Service Delivery Period 2.

Extra over Bulb and Wildflower Areas

105 The item for extra over bulb and wildflower areas shall in accordance with the Preambles to Schedule of Rates and Prices General Directions include for:

Item coverage

(a) compliance with paragraph 4.16 of Schedule 7 Part 1 excluding Detailed Inspections, for all additional Operations required for Service Delivery Period 2.

Woodland Areas and Trees

106 The item for woodland areas and trees shall in accordance with the Preambles to Schedule of Rates and Prices General Directions include for:

Item coverage

(a) compliance with paragraph 4.17 of Schedule 7 Part 1 excluding Detailed Inspections and excluding all additional Operations required for Service Delivery Period 2.

Extra over Woodland Areas and Trees

107 The item for extra over woodland areas and trees shall in accordance with the Preambles to Schedule of Rates and Prices General Directions include for:

Item coverage

(a) compliance with paragraph 4.17 of Schedule 7 Part 1 excluding Detailed Inspections, for

		all additional Operations required for Service Delivery Period 2.
Scrub Areas, Shrub Areas and Hedges	108	The item for scrub areas shrub areas and hedges shall in accordance with the Preambles to Schedule of Rates and Prices General Directions include for:
Item coverage		(a) compliance with paragraph 4.18 of Schedule 7 Part 1 excluding Detailed Inspections and excluding all additional Operations required for Service Delivery Period 2.
Extra over Scrub Areas, Shrub Areas and Hedges	109	The item for extra over scrub areas shrub areas and hedges shall in accordance with the Preambles to Schedule of Rates and Prices General Directions include for:
Item coverage		(a) compliance with paragraph 4.18 of Schedule 7 Part 1 excluding Detailed Inspections, for all additional Operations required for Service Delivery Period 2.
Wetland Areas	110	The item for wetland areas shall in accordance with the Preambles to Schedule of Rates and Prices General Directions include for:
Item coverage		(a) compliance with paragraph 4.19 of Schedule 7 Part 1 excluding Detailed Inspections and excluding all additional Operations required for Service Delivery Period 2.
Extra over Wetland Areas	111	The item for extra over wetland areas shall in accordance with the Preambles to Schedule of Rates and Prices General Directions include for:
Item coverage		(a) compliance with paragraph 4.19 of Schedule 7 Part 1 excluding Detailed Inspections, for all additional Operations required for Service Delivery Period 2.
Special Ecological Measures	112	The item for special ecological measures shall in accordance with the Preambles to Schedule of Rates and Prices General Directions include for:
Item coverage		(a) compliance with paragraph 4.20 of Schedule 7 Part 1 excluding Detailed Inspections and excluding all additional Operations required for Service Delivery Period 2.
Extra over Special Ecological Measures	113	The item for extra over special ecological measures shall in accordance with the Preambles to Schedule of Rates and Prices General Directions include for:
Item coverage		(a) compliance with paragraph 4.20 of Schedule 7 Part 1 excluding Detailed Inspections, for all additional Operations required for Service Delivery Period 2.
Invasive Species	114	The item for invasive species shall in accordance with the Preambles to Schedule of Rates and Prices General Directions include for:
Item coverage		(a) compliance with paragraph 4.21 of Schedule 7 Part 1 excluding Detailed Inspections and

excluding all additional Operations required for Service Delivery Period 2.

Extra over Invasive Species

115 The item for extra over invasive species shall in accordance with the Preambles to Schedule of Rates and Prices General Directions include for:

Item coverage

(a) compliance with paragraph 4.21 of Schedule 7 Part 1 excluding Detailed Inspections, for all additional Operations required for Service Delivery Period 2.

Vehicle Restraint Systems and Pedestrian Restraint Systems

116 The item for vehicle restraint systems and pedestrian restraint systems shall in accordance with the Preambles to Schedule of Rates and Prices General Directions include for:

Item coverage

(a) compliance with paragraphs 4.22 and 4.23 of Schedule 7 Part 1 excluding Detailed Inspections and excluding all additional Operations required for Service Delivery Period 2.

Extra over Vehicle Restraint Systems and Pedestrian Restraint Systems

117 The item for extra over vehicle restraint systems and pedestrian restraint systems shall in accordance with the Preambles to Schedule of Rates and Prices General Directions include for:

Item coverage

(a) compliance with paragraphs 4.22 and 4.23 of Schedule 7 Part 1 excluding Detailed Inspections, for all additional Operations required for Service Delivery Period 2.

Fences, Walls, Screens and Noise Barriers

118 The item for fences, walls, screens and noise barriers shall in accordance with the Preambles to Schedule of Rates and Prices General Directions include for:

Item coverage

(a) compliance with paragraph 4.24 of Schedule 7 Part 1 excluding all additional Operations required for Service Delivery Period 2.

Extra over fences, Walls, Screens and Noise Barriers

119 The item for extra over fences, walls, screens and noise barriers shall in accordance with the Preambles to Schedule of Rates and Prices General Directions include for:

Item coverage

(a) compliance with paragraph 4.24 of Schedule 7 Part 1 for all additional Operations required for Service Delivery Period 2.

Road Studs

120 The item for road studs shall in accordance with the Preambles to Schedule of Rates and Prices General Directions include for:

Item coverage

(a) compliance with paragraph 4.26 of Schedule 7 Part 1 excluding Detailed Inspections and excluding all additional Operations required for Service Delivery Period 2.

Extra over Road Studs	121	The item for extra over road studs shall in accordance with the Preambles to Schedule of Rates and Prices General Directions include for:
Item coverage		(a) compliance with paragraph 4.26 of Schedule 7 Part 1 for all additional Operations required for Service Delivery Period 2.
Road Traffic Signs	122	The item for road traffic signs shall in accordance with the Preambles to Schedule of Rates and Prices General Directions include for:
Item coverage		(a) compliance with paragraph 4.27 of Schedule 7 Part 1 excluding Detailed Inspections and excluding all additional Operations required for Service Delivery Period 2.
Extra over Road Traffic Signs	123	The item for extra over road traffic signs shall in accordance with the Preambles to Schedule of Rates and Prices General Directions include for:
Item coverage		(a) compliance with paragraph 4.27 of Schedule 7 Part 1 excluding Detailed Inspections, for all additional Operations required for Service Delivery Period 2.
Traffic Signals	124	The item for traffic signals shall in accordance with the Preambles to Schedule of Rates and Prices General Directions include for:
Item coverage		(a) compliance with paragraph 4.28 of Schedule 7 Part 1 excluding Detailed Inspections and excluding all additional Operations required for Service Delivery Period 2.
Extra over Traffic Signals	125	The item for extra over traffic signals shall in accordance with the Preambles to Schedule of Rates and Prices General Directions include for:
Item coverage		(a) compliance with paragraph 4.28 of Schedule 7 Part 1 excluding Detailed Inspections, for all additional Operations required for Service Delivery Period 2.
Roadside Electrical Assets and Power Supplies	126	The item for roadside electrical assets and power supplies shall in accordance with the Preambles to Schedule of Rates and Prices General Directions include for:
Item coverage		(a) compliance with paragraph 4.29 of Schedule 7 Part 1 excluding Detailed Inspections and excluding all additional Operations required for Service Delivery Period 2.
Extra over Roadside Electrical Assets and Power Supplies	127	The item for extra over roadside electrical assets and power supplies shall in accordance with the Preambles to Schedule of Rates and Prices General Directions include for:
Item coverage		(a) compliance with paragraph 4.29 of Schedule 7 Part 1 excluding Detailed Inspections, for all additional Operations required for Service Delivery Period 2.

Weather Stations	128	The item for weather stations shall in accordance with the Preambles to Schedule of Rates and Prices General Directions include for:
Item coverage		(a) compliance with paragraph 4.30 of Schedule 7 Part 1 excluding Detailed Inspections and excluding all additional Operations required for Service Delivery Period 2.
Extra over Weather Stations	129	The item for extra over weather stations shall in accordance with the Preambles to Schedule of Rates and Prices General Directions include for:
Item coverage		(a) compliance with paragraph 4.30 of Schedule 7 Part 1 excluding Detailed Inspections, for all additional Operations required for Service Delivery Period 2.
Traffic Control Barriers	130	The item for traffic control barriers shall in accordance with the Preambles to Schedule of Rates and Prices General Directions include for:
Item coverage		(a) compliance with paragraph 4.33 of Schedule 7 Part 1 excluding Detailed Inspections and excluding all additional Operations required for Service Delivery Period 2.
Extra over Traffic Control Barriers	131	The item for extra over traffic control barriers shall in accordance with the Preambles to Schedule of Rates and Prices General Directions include for:
Item coverage		(a) compliance with paragraph 4.33 of Schedule 7 Part 1 excluding Detailed Inspections, for all additional Operations required for Service Delivery Period 2.
Litter and Refuse	132	The item for litter and refuse shall in accordance with the Preambles to Schedule of Rates and Prices General Directions include for:
Item coverage		(a) compliance with paragraph 4.34 of Schedule 7 Part 1 excluding Detailed Inspections and excluding all additional Operations required for Service Delivery Period 2.
Extra over Litter and Refuse	133	The item for extra over litter and refuse shall in accordance with the Preambles to Schedule of Rates and Prices General Directions include for:
Item coverage		(a) compliance with paragraph 4.34 of Schedule 7 Part 1 excluding Detailed Inspections, for all additional Operations required for Service Delivery Period 2.
Dead Animals Objects and Cleaning	134	The item for dead animals, objects and cleaning shall in accordance with the Preambles to Schedule of Rates and Prices General Directions include for:
Item coverage		(a) compliance with paragraph 4.35 of Schedule 7 Part 1 excluding all additional Operations required for Service Delivery Period 2.

Extra over Dead Animals Objects and Cleaning	135	The item for extra over dead animals, objects and cleaning shall in accordance with the Preambles to Schedule of Rates and Prices General Directions include for:
Item coverage		(a) compliance with paragraph 4.35 of Schedule 7 Part 1 for all additional Operations required for Service Delivery Period 2.
Removal of Graffiti	136	The item for removal of graffiti shall in accordance with the Preambles to Schedule of Rates and Prices General Directions include for:
Item coverage		(a) compliance with paragraph 4.36 of Schedule 7 Part 1 excluding Detailed Inspections and excluding all additional Operations required for Service Delivery Period 2.
Extra Removal of Graffiti	137	The item for extra over removal of graffiti shall in accordance with the Preambles to Schedule of Rates and Prices General Directions include for:
Item coverage		(a) compliance with paragraph 4.36 of Schedule 7 Part 1 excluding Detailed Inspections, for all additional Operations required for Service Delivery Period 2.
Node Markers	138	The item for node markers shall in accordance with the Preambles to Schedule of Rates and Prices General Directions include for:
Item coverage		(a) compliance with paragraph 4.37 of Schedule 7 Part 1 excluding Detailed Inspections and excluding all additional Operations required for Service Delivery Period 2.
Extra over Node Markers	139	The item for extra over node markers shall in accordance with the Preambles to Schedule of Rates and Prices General Directions include for:
Item coverage		(a) compliance with paragraph 4.37 of Schedule 7 Part 1 excluding Detailed Inspections, for all additional Operations required for Service Delivery Period 2.
Flooding	140	The item for flooding shall in accordance with the Preambles to Schedule of Rates and Prices General Directions include for:
Item coverage		(a) compliance with paragraph 4.38 of Schedule 7 Part 1 excluding Detailed Inspections and excluding all additional Operations required for Service Delivery Period 2.
Extra over Flooding	141	The item for extra over flooding shall in accordance with the Preambles to Schedule of Rates and Prices General Directions include for:
Item coverage		(a) compliance with paragraph 4.38 of Schedule 7 Part 1 excluding Detailed Inspections, for all additional Operations required for Service Delivery Period 2.

Populate Network Inventory for Network 1	142	The item for populate network inventory for Network 1 shall in accordance with the Preambles to Schedule of Rates and Prices General Directions include for:
Item coverage		(a) compliance with paragraph 1.8.14 of Schedule 7 Part 1.
Populate Network Inventory for Network 2	143	The item for populate network inventory for Network 2 shall in accordance with the Preambles to Schedule of Rates and Prices General Directions include for:
Item coverage		(a) compliance with paragraph 1.8.15 of Schedule 7 Part 1.
Winter Service	144	The item for Winter Service shall in accordance with the Preambles to Schedule of Rates and Prices General Directions include for:
Item coverage		(a) compliance with Schedule 7 Part 2 excluding all additional Operations required for Service Delivery Period 2.
Extra over Winter Service	145	The item for extra over Winter Service shall in accordance with the Preambles to Schedule of Rates and Prices General Directions include for:
Item coverage		(a) compliance with Schedule 7 Part 2 for all additional Operations required for Service Delivery Period 2.
Incident Response excluding Incident Response Operations for Incidents of Value not more than £10,000	146	The item for Incident Response shall in accordance with the Preambles to Schedule of Rates and Prices General Directions include for:
Item coverage		(a) compliance with Schedule 7 Part 3 excluding Incident Response Operations, Vehicle Recovery Service and excluding all additional Operations required for Service Delivery Period 2.
Extra over Incident Response excluding Incident Response Operations for Incidents of Value not more than £10,000	147	The item for extra over Incident Response shall in accordance with the Preambles to Schedule of Rates and Prices General Directions include for:
Item coverage		(a) compliance with Schedule 7 Part 3 excluding Incident Response Operations and Vehicle Recovery Service for all additional Operations required for Service Delivery Period 2.
Incident Response Operations for Incidents of Value not more than £10,000	148	The item for Incident Response Operations for Incidents of value not more than £10,000 shall in accordance with the Preambles to the Schedule of Rates and Prices General Directions include for:
Item coverage		(a) compliance with Schedule 7 Part 3 Incident Response Operations,
		(b) travel to and from the scene of the Incident,

(c) acting on Orders and or the instructions of the Emergency Services,

(d) reporting to the Overseeing Organisation details of all Operations carried out and materials used,

(e) disruption to other work as a result of attending Incidents,

(f) attending a reported Incident or Category 1 Defect where no defect is found,

(g) maintaining temporary repairs until a permanent repair is carried out,

(h) Professional Services,

excluding all additional Operations required for Service Delivery Period 2.

Extra over Incident Response Operations for Incidents of Value not more than £10,000

149 The item for extra over Incident Response Operations for Incidents of value not more than £10,000 shall in accordance with the Preambles to the Schedule of Rates and Prices General Directions include for:

Item coverage

(a) compliance with Schedule 7 Part 3 Incident Response Operations,

(b) travel to and from the scene of the Incident,

(c) acting on Orders and or the instructions of the Emergency Services,

(d) reporting to the Overseeing Organisation details of all Operations carried out and materials used,

(e) disruption to other work as a result of attending Incidents,

(f) attending a reported Incident or Category 1 Defect where no defect is found,

(g) maintaining temporary repairs until a permanent repair is carried out,

(h) Professional Services,

for all additional Operations required for Service Delivery Period 2.

Light Recovery Vehicle, Motorcycle Recovery Facility and Impact Protection Vehicle

150 The item for light recovery vehicle, motorcycle recovery facility and impact protection vehicle shall in accordance with the Preambles to the Schedule of Rates and Prices General Directions include for:

Item coverage

(a) compliance with Schedule 7 Part 3 and Schedule 9 Part 2 excluding all additional Operations required for Service Delivery Period 2.

Extra over Light Recovery Vehicle, Motorcycle Recovery

151 The item for extra over light recovery vehicle, motorcycle recovery facility and impact protection vehicle shall in accordance with the Preambles to the

Facility and Impact Protection Vehicle		Schedule of Rates and Prices General Directions include for:
Item coverage		(a) compliance with Schedule 7 Part 3 and Schedule 9 Part 2 for all additional Operations required for Service Delivery Period 2.
Heavy Recovery Vehicle and Impact Protection Vehicle	152	The item for heavy recovery vehicle and impact protection vehicle shall in accordance with the Preambles to the Schedule of Rates and Prices General Directions include for:
Item coverage		(a) compliance with Schedule 7 Part 3 and Schedule 9 Part 2 excluding all additional Operations required for Service Delivery Period 2.
Not Used	153	Item not taken up
Landscape Development Process and Deliverables	154	The item for landscape development process and deliverables shall in accordance with the Preambles to Schedule of Rates and Prices General Directions include for:
Item coverage		(a) compliance with Schedule 7 Part 4 excluding all additional Operations required for Service Delivery Period 2.
Extra over Landscape Development Process and Deliverables	155	The item for extra over landscape development process and deliverables shall in accordance with the Preambles to Schedule of Rates and Prices General Directions include for:
Item coverage		(a) compliance with Schedule 7 Part 4 for all additional Operations required for Service Delivery Period 2.
New Roads and Street Works Act 1991	156	The item for New Roads and Street Works Act 1991 shall in accordance with the Preambles to Schedule of Rates and Prices General Directions include for:
Item coverage		(a) compliance with Schedule 7 Part 5 excluding all additional Operations required for Service Delivery Period 2.
Extra over New Roads and Street Works Act 1991	157	The item for extra over New Roads and Street Works Act 1991 shall in accordance with the Preambles to Schedule of Rates and Prices General Directions include for:
Item coverage		(a) compliance with Schedule 7 Part 5 for all additional Operations required for Service Delivery Period 2.
Management and Maintenance of Structures excluding Requirements for Maintenance of Structures	158	The item for management and maintenance of structures shall in accordance with the Preambles to Schedule of Rates and Prices General Directions include for:

Item coverage		(a) compliance with Schedule 7 Part 6 excluding paragraph 5, excluding the cost of Possessions and excluding all additional Operations required for Service Delivery Period 2.
Extra over Management and Maintenance of Structures excluding Requirements for Maintenance of Structures	159	The item for extra over management and maintenance of structures shall in accordance with the Preambles to Schedule of Rates and Prices General Directions include for:
Item coverage		(a) compliance with Schedule 7 Part 6 excluding paragraph 5, excluding the cost of Possessions, for all additional Operations required for Service Delivery Period 2.
Management and Maintenance of Structures: Requirements for Maintenance of Structures	160	The item for management and maintenance of Structures: requirements for maintenance of structures shall in accordance with the Preambles to Schedule of Rates and Prices General Directions include for:
Item coverage		(a) compliance with paragraph 5 of Schedule 7 Part 6 excluding the cost of Possessions and excluding all additional Operations required for Service Delivery Period 2.
Extra over Management and Maintenance of Structures: Requirements for Maintenance of Structures	161	The item for extra over management and maintenance of Structures: requirements for maintenance of structures shall in accordance with the Preambles to Schedule of Rates and Prices General Directions include for:
Item coverage		a) compliance with paragraph 5 of Schedule 7 Part 6 excluding the cost of Possessions, for all additional Operations required for Service Delivery Period 2.
Operation and Monitoring of Main Cable Acoustic Monitoring System on Forth Road Bridge	162	The item for operation and monitoring of main cable acoustic monitoring system on Forth Road Bridge shall in accordance with the Preambles to Schedule of Rates and Prices General Directions include for:
Item coverage		(a) compliance with paragraph 2.2.11 of Annex 7.7/A to Schedule 7 Part 7.

Operation and Monitoring of Main Cable De-humidification System in Accordance with Manufacturer's Recommendations on Forth Road Bridge	163	The item for operation and monitoring of main cable de-humidification system in accordance with manufacturer's recommendations on Forth Road Bridge shall in accordance with the Preambles to Schedule of Rates and Prices General Directions include for:
Item coverage		a) compliance with Schedule 7 Part 7.
Maintenance and Calibration of Weigh in Motion System in accordance with manufacturer's recommendations on Forth Road Bridge	164	The item for maintenance and calibration of weigh in motion system in accordance with manufacturer's recommendations on Forth Road Bridge shall in accordance with the Preambles to Schedule of Rates and Prices General Directions include for:
Item coverage		a) compliance with Schedule 7 Part 7.
Forth Road Bridge Inspection requirements in accordance with the Forth Road Bridge Engineering Manual	165	The item for Forth Road Bridge inspection requirements in accordance with the Forth Road Bridge Engineering Manual shall in accordance with the Preambles to Schedule of Rates and Prices General Directions include for:
Item coverage		a) compliance with the requirements of Schedule 7 Part 7.
Queensferry Crossing Inspection requirements in accordance with the Queensferry Crossing Inspection and Maintenance Manual	166	The item for Queensferry Crossing inspection requirements in accordance with the Queensferry Crossing Inspection and Maintenance Manual shall in accordance with the Preambles to Schedule of Rates and Prices General Directions include for:
Item description		(a) compliance with Schedule 7 Part 7.
Inspection, Operation, Maintenance and Servicing of Access Systems for Forth Road Bridge	167	The item for inspection, operation, maintenance and servicing of Access Systems for Forth Road Bridge shall in accordance with the Preambles to Schedule of Rates and Prices General Directions include for:
Item coverage		(a) compliance with paragraph 2.2.13 and 2.2.14 of Annex 7.7/A to Schedule 7 Part 7.
Inspection, Operation, Maintenance and Servicing of Access Systems for Queensferry Crossing	168	The item for inspection, operation, maintenance and servicing of Access Systems for Queensferry Crossing shall in accordance with the Preambles to Schedule of Rates and Prices General Directions include for:
Item coverage		(a) compliance with paragraph 3.2.11 and 3.2.12 of Annex 7.7/A to Schedule 7 Part 7.
Forth Road Bridge Engineering Manual	169	The item for Forth Road Bridge Engineering Manual shall in accordance with the Preambles to Schedule of Rates and Prices General Directions include for:

Item coverage		(a) All requirements of the Forth Road Bridge Engineering Manual not covered in any other item.
Queensferry Crossing Inspection and Maintenance Manual	170	The item for Queensferry Crossing Inspection and Maintenance Manual shall in accordance with the Preambles to Schedule of Rates and Prices General Directions include for:
Item coverage		(a) All requirements of the Queensferry Crossing Inspection and Maintenance Manual not covered in any other item.
Inspection, Operation and Maintenance of Mechanical and Electrical Systems on the Forth Road Bridge	171	The item for inspection, operation and maintenance of mechanical and electrical systems on the Forth Road Bridge shall in accordance with the Preambles to Schedule of Rates and Prices General Directions include for:
Item coverage		(a) compliance with paragraph 2.2.12 of Annex 7.7/A to Schedule 7 Part 7.
Inspection, Operation and Maintenance of Mechanical and Electrical Systems for the Queensferry Crossing	172	The item for inspection and maintenance of mechanical and electrical components for the Queensferry Crossing shall in accordance with the Preambles to Schedule of Rates and Prices General Directions include for:
Item coverage		(a) compliance with paragraph 3.2.10 of Annex 7.7/A to Schedule 7 Part 7.
Operation and Maintenance of the Supervisory Control And Data Acquisition System for Queensferry Crossing	173	The item for operation and maintenance of the Supervisory Control And Data Acquisition System for Queensferry Crossing shall in accordance with the Preambles to Schedule of Rates and Prices General Directions include for:
Item coverage		(a) compliance with Schedule 7 Part 7.
Operation and Maintenance of the Structural Health Monitoring System for Queensferry Crossing	174	The item for operation and maintenance of the Structural Health Monitoring System for Queensferry Crossing shall in accordance with the Preambles to Schedule of Rates and Prices General Directions include for:
Item coverage		(a) compliance with Schedule 7 Part 7.
Maintenance Activities for Forth Road Bridge	175	The item for maintenance activities for Forth Road Bridge shall in accordance with the Preambles to Schedule of Rates and Prices General Directions include for:
Item coverage		(a) compliance with Schedule 7 Part 6 and Schedule 7 Part 7
Maintenance Activities for Queensferry Crossing	176	The item for maintenance activities for Queensferry Crossing shall in accordance with the Preambles to Schedule of Rates and Prices General Directions include for:

Item coverage		(a) compliance with Schedule 7 Part 6 and Schedule 7 Part 7 excluding the cost of Possessions
Monitoring and Reporting Requirements for the Supervisory Control And Data Acquisition System for Queensferry Crossing	177	The item for monitoring and reporting requirements for the Supervisory Control And Data Acquisition System for Queensferry Crossing shall in accordance with the Preambles to Schedule of Rates and Prices General Directions include for:
Item coverage		(a) compliance with Schedule 7 Part 7
Monitoring and Reporting Requirements for the Structural Health Monitoring System for Queensferry Crossing	178	The item for monitoring and reporting requirements for the Structural Health Monitoring System for Queensferry Crossing shall in accordance with the Preambles to Schedule of Rates and Prices General Directions include for:
Item coverage		(a) compliance with Schedule 7 Part 7.
Monitoring of BP oil pipeline structures for stray current from oil pipeline	179	The item for monitoring of BP oil pipeline structures for stray current from oil pipeline shall in accordance with the Preambles to Schedule of Rates and Prices General Directions include for:
Item coverage		(a) compliance with Schedule 7 Part 7.
Maintain structural analysis software for Forth Road Bridge	180	The item for maintain structural analysis software for Forth Road Bridge shall in accordance with the Preambles to Schedule of Rates and Prices General Directions include for:
Item coverage		(a) compliance with paragraph 2.2.18 of Annex 7.7/A to Schedule 7 Part 7.
Maintain structural analysis software for Queensferry Crossing	181	The item for maintain structural analysis software for Queensferry Crossing shall in accordance with the Preambles to Schedule of Rates and Prices General Directions include for:
Item coverage		(a) compliance with paragraph 3.2.27 of Annex 7.7/A to Schedule 7 Part 7.
Establish and Maintain Bridge Asset Management Database for Forth Road Bridge	182	The item for establish and maintain bridge asset management database for Forth Road Bridge shall in accordance with the Preambles to Schedule of Rates and Prices General Directions include for:
Item coverage		(a) compliance with paragraph 2.2.16 of Annex 7.7/A to Schedule 7 Part 7.
Establish and Maintain Bridge Asset Management Database for Queensferry Crossing	183	The item for establish and maintain bridge asset management database for Queensferry Crossing shall in accordance with the Preambles to Schedule of Rates and Prices General Directions include for:
Item coverage		(a) compliance with paragraph 3.2.14 of Annex 7.7/A to Schedule 7 Part 7

Inspection and Maintenance of CCTV and intruder alarms	184	The item for inspection and maintenance of CCTV and intruder alarms shall in accordance with the Preambles to Schedule of Rates and Prices General Directions include for:
Item coverage		(a) compliance with Schedule 7 Part 7 excluding all additional Operations required for Service Delivery Period 2.
Extra over Inspection and Maintenance of CCTV and intruder alarms	185	The item for extra over inspection and maintenance of CCTV and intruder alarms shall in accordance with the Preambles to Schedule of Rates and Prices General Directions include for:
Item coverage		(a) compliance with Schedule 7 Part 7 for all additional Operations required for Service Delivery Period 2.
Monitoring, Operation and Maintenance of security system on Forth Road Bridge	186	The item for monitoring, operation and maintenance of security system on Forth Road Bridge shall in accordance with the Preambles to Schedule of Rates and Prices General Directions include for:
Item coverage		(a) compliance with Schedule 7 Part 7.
Monitoring, Operation and Maintenance of security system on Queensferry Crossing	187	The item for operation, monitoring and maintenance of security systems on Queensferry Crossing shall in accordance with the Preambles to Schedule of Rates and Prices General Directions include for:
Item coverage		(a) compliance with Schedule 7 Part 7.
Operation of Forth Road Bridge from Control room (Service Delivery Period 1)	188	The item for operation of Forth Road Bridge from control room (Service Delivery Period 1) shall in accordance with the Preambles to Schedule of Rates and Prices General Directions include for:
Item coverage		(a) compliance with Schedule 5 Part 7 and Schedule 7 Part 7.
Operation of Forth Road Bridge and Queensferry Crossing from Control room (Service Delivery Period 2)	189	The item for operation of Forth Road Bridge and Queensferry Crossing from control room (Service Delivery Period 2) shall in accordance with the Preambles to Schedule of Rates and Prices General Directions include for:
Item coverage		(a) compliance with Schedule 5 Part 7 and Schedule 7 Part 7.
Severe Weather Services	190	The item for Severe Weather shall in accordance with the Preambles to Schedule of Rates and Prices General Directions include for:
Item coverage		(a) compliance with Schedule 7 Part 8 excluding all additional Operations required for Service Delivery Period 2.
Extra over Severe Weather Services	191	The item for extra over Severe Weather shall in accordance with the Preambles to Schedule of Rates and Prices General Directions include for:

Item coverage		(a) compliance with Schedule 7 Part 8 for all additional operations required for Service Delivery Period 2.
Abnormal Indivisible Load Routeing	192	The item for abnormal indivisible load routeing shall in accordance with the Preambles to Schedule of Rates and Prices General Directions include for:
Item coverage		(a) compliance with Schedule 8 Part 1 excluding all additional Operations required for Service Delivery Period 2.
Extra over Abnormal Indivisible Load Routeing	193	The extra over item for abnormal indivisible load routeing shall in accordance with the Preambles to Schedule of Rates and Prices General Directions include for:
Item coverage		(a) compliance with Schedule 8 Part 1 for all additional Operations required for Service Delivery Period 2.
Development Management	194	The item for development management shall in accordance with the Preambles to Schedule of Rates and Prices General Directions include for:
Item coverage		(a) compliance with Schedule 8 Part 2 excluding all additional Operations required for Service Delivery Period 2.
Extra over Development Management	195	The item for extra over development management shall in accordance with the Preambles to Schedule of Rates and Prices General Directions include for:
Item coverage		(a) compliance with Schedule 8 Part 2. for all additional Operations required for Service Delivery Period 2.
Road Safety and Accident Investigation and Prevention	196	The item for road safety and accident investigation and prevention shall in accordance with the Preambles to Schedule of Rates and Prices General Directions include for:
Item coverage		(a) compliance with Schedule 8 Part 3 excluding procurement and management of Works Contracts measured under Series 6300 and excluding all additional Operations required for Service Delivery Period 2.
Extra over Road Safety and Accident Investigation and Prevention	197	The item for extra over road safety and accident investigation and prevention shall in accordance with the Preambles to Schedule of Rates and Prices General Directions include for:
Item coverage		(a) compliance with Schedule 8 Part 3 excluding procurement and management of Works Contracts measured under Series 6300, for all additional Operations required for Service Delivery Period 2.

Signs Requiring Authorisation	198	The item for signs requiring authorisation shall in accordance with the Preambles to Schedule of Rates and Prices General Directions include for:
Item coverage		(a) compliance with Schedule 8 Part 4 and excluding all additional Operations required for Service Delivery Period 2.
Extra over Signs Requiring Authorisation	199	The item for extra over signs requiring authorisation shall in accordance with the Preambles to Schedule of Rates and Prices General Directions include for:
Item coverage		(a) compliance with Schedule 8 Part 4 for all additional Operations required for Service Delivery Period 2.
Manage and Maintain Grip Tester	200	The item for Manage and Maintain Grip Tester shall in accordance with the Preambles to Schedule of Rates and Prices General Directions include for:
Item coverage		(a) compliance with Clauses 972AR and 973AR of Schedule 9 Part 1.

SCOTTISH MINISTERS' REQUIREMENTS

SCHEDULE 2 PART 1

METHOD OF MEASUREMENT

SERIES 6200: PROFESSIONAL SERVICES

Professional Services

Units

1 The units of measurement shall be:

(i) staff category and classification ……..... hour.

Measurement

2 Professional Services rates shall apply for Scheme investigations.

Professional Services for other Operations shall only be measured using this Series where subject to an Order stating that Professional Services are to be used.

The measurement of work at professional services rates shall be based on certified timesheet records. Travel time shall be paid for travel from the Central Office or a sub office within the Unit to the location where the services are being undertaken whichever is the lesser.

Itemisation

3 Separate items shall be provided for professional services rates in accordance with Chapter II paragraphs 3 and 4 and the following:

Group	Feature	
I	1	Category of staff.
	2	Staff classification.

Professional Services

4 The items for professional services rates shall in accordance with the Preambles to Schedule of Rates and Prices General Directions include for:

Item Coverage

(a) basic time and overtime worked,

(b) non-productive overtime payments,

(c) bonuses and incentive payments,

(d) National Insurance,

(e) holidays with pay,

(f) sickness benefits,

(g) pension and life insurance benefits,

(h) travel and subsistence,

(i) car and car allowance,

(j) office accommodation, equipment and supplies,

(k) administration (including managerial, supervisory, clerical, administrative and accountancy staff),

(l) any tax, charge, levy impost or payment of any kind which the Operating Company shall be obliged to pay by law to make on behalf of persons employed by the Operating Company including all mobilisation and demobilisation requirements,

(m) appropriate computers and general office applications and software,

(n) printing, binding, photocopying and similar administrative tasks,

(o) preparation, updating and submission to the Director of registers of staff, curricula vitae and other details,

(p) all other costs and all charges whatsoever associated with the employment of any such professional.

SCOTTISH MINISTERS' REQUIREMENTS

SCHEDULE 2 PART 1

METHOD OF MEASUREMENT

SERIES 6300: FEE PERCENTAGES FOR DESIGN, PROCUREMENT AND MANAGEMENT

Generally

Definitions

1 The following definitions shall apply to this Series of this Schedule:

(i) "Roadworks" means all work other than Bridgeworks.

(ii) "Bridgeworks" means work on Structures.

(iii) "Lane rental" means a Works Contract where the requirements of a lane rental Clause for a bonus for early completion and charge for late completion are included.

(iv) "Cost" means the Estimated Construction Value of the Scheme as stated in the approved Statement of Intent, excluding any bonus adjustments or other charges related to lane rental Works Contracts.

Fee Percentages for Design of Schemes to be Constructed by the Operating Company

2 Fee percentages shall be used for the design of Schemes that are to be constructed by the Operating Company where the Estimated Construction Value as stated within the approved Statement of Intent is greater than £50,000.

Schemes shall be classified as follows:

(i) Roadworks – having a Bridgeworks content of 40% or less of the Estimated Construction Value.

(ii) Bridgeworks – having a Bridgeworks content of greater than 40% or more of the Estimated Construction Value.

Units

3 The unit of measurement shall be:

(i) fees for design of Schemes to be constructed by the Operating Company where the Estimated Construction Value exceeds £50,000……. percentage.

Measurement

4 Fee percentages for Design shall be measured against the Estimated Construction Value as stated within the approved Statement of Intent and not the final outturn construction costs

The quantity to be measured shall reflect the proportion of design completed in respect of the Estimated Construction Value.

Itemisation

5 Separate items shall be provided for fees for the design of Schemes to be constructed by the Operating Company where the Estimated Construction Value exceeds £50,000 in accordance with Chapter II paragraphs 3 and 4 and the following:

Group	Feature	
I	1	Design of Schemes Constructed by the Operating Company.
III	1	Roadworks.
	2	Bridgeworks.

Design of Schemes to be Constructed by the Operating Company

6 The items for fees for Design of Schemes to be constructed by the Operating Company where the Estimated Construction Value exceeds £50,000 shall in accordance with the Preambles to Schedule of Rates and Prices General Directions include for:

Item Coverage

(a) compliance with Schedule 6 Part 4.

Fee Percentages for Design, Procurement and Management of Works Contracts

7 Fee percentages shall be used for the Design, procurement and management of all Works Contracts.

Works Contracts shall be classified as follows:

(i) Roadworks – having a Bridgeworks content of 40% or less of the Cost.

(iii) Bridgeworks – having a Bridgeworks content of greater than 40% or more of the Cost.

(iii) Lane rental – in combination with any of the above items (i) and (ii) under a lane rental regime.

Measurement

8 The percentages in for design, procurement and management of Works Contacts shall also apply to work on the Unit undertaken by others that the Scottish Ministers require the Operating Company to procure and or supervise.

Fee percentages for design, procurement and management of Works Contacts shall be measured against the Estimated Construction Value as stated within the approved Statement of Intent and not the final outturn construction costs.

The quantities to be measured shall reflect the proportions of design, procurement or management completed in respect of the Estimated Construction Value.

The Order of procurement and management for Works Contracts with element construction costs up to £350,000 shall be at the discretion of the Director.

(i) the percentage entered against the first Cost band shall be applied to the element of Cost of a Works Contract below £350,000,

(ii) the percentage entered against the second Cost band shall be applied to the element of the Cost of a Works Contract between £350,000 and £750,000,

(iii) the percentage entered against the third Cost band shall be applied to the element of the Cost of a Works Contract between £750,000 and £1,500,000,

(iv) the percentage entered against the fourth Cost band shall be applied to the element of the Cost of a Works Contract between £1,500,000 and £3,000,000,

(v) the percentage entered against the fifth Cost band shall be applied to the element of the Cost of a Works Contract above £3,000,000,

(vi) the percentage entered against extra over fees for management for Lane rental shall be applied to the total of management fees measured under the five cost bands above.

Units

9 The unit of measurement shall be:

(i) fees for Design, procurement and management of Works Contracts and extra over fees for management for Lane rental……. percentage.

10 Separate items shall be provided for the procurement and management of Works Contracts in accordance with Chapter II paragraphs 3 and 4 and the following:

Itemisation

Group	Feature	
I	1	Works Contracts.
II	1	Design
	2	Procurement.
	3	Management.
	4	Extra over management fees for Lane rental.
III	1	Roadworks.
	2	Bridgeworks.
IV	1	Element of Cost of a Works Contract below £350,000.
	2	Element of the Cost of a Works Contract between £350,000 and £750,000.
	3	Element of the Cost of a Works Contract between £750,000 and £1,500,000.
	4	Element of the Cost of a Works Contract between £1,500,000 and £2,000,000.
	5	Element of the Cost of a Works Contract between £2,000,000 and £3,000,000.
	6	Element of the Cost of a Works Contract above £3,000,000.

Note: Group IV shall only apply to Group II features 1, 2 and 3.

Fees for Design of Works Contracts

11 The items for the fees for Design of Works Contracts shall in accordance with the Preambles to Schedule of Rates and Prices General Directions include for:

Item Coverage

(a) compliance with Schedule 6 Part 4 in respect of Works Contracts.

Fees for Procurement of Works Contracts

12 The items for the fees for procurement of Works Contracts shall in accordance with the Preambles to Schedule of Rates and Prices General Directions include for:

Item Coverage

(a) compliance with paragraphs 1, 3 and 4 of Schedule 6 Part 1.

Fees for Management of Works Contracts

13 The items for fees for management of Works Contracts shall in accordance with the Preambles to Schedule of Rates and Prices General Directions include for:

Item Coverage

(a) compliance with paragraphs 1 and 5 of Schedule 6 Part 1.

The following items shall not be included in the percentage adjustments but shall be included in Series 100 of the *Method of Measurement* for Highway Works of the Works Contract where appropriate:

(a) temporary accommodation for the Engineer,

(b) vehicles for the Engineer,

(c) communication system for the Engineer,

(d) operatives for the Engineer,

(e) scheme information boards,

(f) information signs.

SCOTTISH MINISTERS' REQUIREMENTS

SCHEDULE 2 PART 1

METHOD OF MEASUREMENT

SERIES 6400: ADJUSTMENT TO SCHEDULE OF RATES AND PRICES

Adjustment for Time Band

1 The percentage adjustments apply to each of the time bands shown below, excluding time band reference 1 which is not subject to adjustment.

Time Bands		
Time Band Reference	**Day of Week**	**Hours**
1	Monday to Friday (inclusive)	0700 to 1900 inclusive
2	Monday pm to Tuesday am	1900 to 0700 inclusive
2	Tuesday pm to Wednesday am	1900 to 0700 inclusive
2	Wednesday pm to Thursday am	1900 to 0700 inclusive
2	Thursday pm to Friday am	1900 to 0700 inclusive
3	Friday pm to Monday am	1900 to 0700 inclusive
4	public holiday	1900* to †0700 inclusive

* previous day to public holiday

† following day to public holiday

2 Each time band adjustment shall comprise a single percentage adjustment to cover all Series except for Series 700 which shall be separately measured and those Series stated in the Preambles to Schedule of Rates and Prices General Directions paragraph 20 as not being subject to any time band adjustment.

3 The unit of measurement shall be:

Units

(i) percentage adjustment to rates and prices for Operations …….. percentage.

Measurement

4 The percentages shall be applied where relevant to the value of the relevant Operations executed within each time band.

Itemisation

5 Separate items shall be provided for time band adjustments in accordance with Chapter II paragraphs 3 and 4 and the following:

Group	Feature	
I	1	Percentage adjustment to rates for Operations.
II	1	Time band reference.

III	1	Series 700.
	2	All other Series (excluding Series 700).

Time Band Adjustment to Schedule of Rates and Prices

6 The percentage adjustments inserted in the items for time band adjustment to Schedule of Rates and Prices shall in accordance with the Preambles to Schedule of Rates and Prices General Directions include for:

Item Coverage

(a) all additional costs.

Adjustment for Works Within and Below Non-Tidal Open Water or Tidal Water

7 The unit of measurement shall be:

Units

(i) percentage adjustment to rates for Operations executed within and below non tidal open water …… percentage,

(ii) percentage adjustment to rates for Operations executed between mean high water springs and mean low waters springs …… percentage,

(iii) percentage adjustment to rates for Operations executed below mean low water springs …… percentage.

Measurement

8 The percentage adjustment shall be applied to the value of the Operations executed within and below non-tidal open water or tidal water below mean high water springs.

Itemisation

9 Separate items shall be provided for Operations within and below non-tidal open water or tidal water below mean high water springs in accordance with Chapter II paragraphs 3 and 4 and the following:

Group	Feature	
I	1	Percentage adjustment to rates for Operations.
II	1	Within and below non-tidal open water.
	2	Within and below tidal water.
III	1	Between mean high water springs and mean low waters springs.
	2	Below mean low water springs.

Note: Group III shall only apply to Group II feature 2.

Adjustment for Works Within and Below Non-Tidal Open Water or Tidal Water

10 The percentage adjustments inserted in the items for adjustment for Operations within and below non-tidal open water or tidal water to Schedule of Rates and Prices shall in accordance with the Preambles to Schedule of Rates and Prices General Directions include for:

Item Coverage

(a) all additional costs.

SCOTTISH MINISTERS' REQUIREMENTS

SCHEDULE 2 PART 1

METHOD OF MEASUREMENT

SERIES 6500: TIME WORK SCHEDULE

Time Work Schedule

Definition

1 The following terms and conditions shall apply to all work subject to an Order in accordance with Schedule 1 to be executed on a Series 6500: Time Work Schedule basis.

The term 'Sub-contractors' used in this Series shall include "Labour only" sub-contractors.

Sub-contractors labour plant and materials shall be included on the Statements submitted by the Operating Company and shall be paid at the rates and prices contained herein as though they are directly employed by the Operating Company in accordance with this Series. No adjustment or allowance shall be applied in respect of labour plant and materials supplied by sub-contractors.

For the purposes of labour the Operating Company's normal working hours shall be defined as 0700 hrs to 1900 hrs Monday to Friday inclusive and excluding public holidays.

Unless otherwise ordered by the Overseeing Organisation, Series 6500: Time Work Schedule items shall not be measured where there are appropriate items in Series 0200 to 6400 and Series 6700 to 6800 of this Schedule, or where similar items exist from which a rate can be deduced in accordance with Clause 10.1 of Schedule 1.

Labour

2 Trades and activities to be carried out by the labour type as detailed under this Series shall be as Table 1 below.

Table 1

Labour Type	**Trades and Activities Applicable (inclusive of sub-contractors).**
Ganger	Working foreman, covering all trades.
Driver/machine operator	Heavy goods vehicle driver, machine/plant operator.
Skilled operative	Surfacing operative, traffic management operative, fencing operative, footway and kerb laying operative, drainage operative, scaffolder, reinforcement bar fixer, steelwork erectors/fabricator, mechanic/fitter, welder, painter, rigger, landscaping operative and other skilled operative.
Craftsman	Bricklayer, painter, decorator, carpenter, joiner, plumber and other skilled craftsman.
Electrician	Traffic signals, road lighting and communications engineer.
General Operative	Labourer, watchman, banksman, handyman, light duty driver and other general or unskilled operative.

Units 3 The units of measurement shall be:

(i) ganger, driver/machine operator, skilled operative, craftsman, electrical engineer, general operative ….....hour.

Measurement 4 The measurement of ganger, driver/machine operator, skilled operative, craftsman, electrical engineer and general operative shall be the actual hours spent on work on the Site when Operations are subject to an Order.

The measurement of time worked outside the Operating Company's Normal Working Hours shall only be applicable when the Operations are either so referred to in an Order or required, due to time work restraints, to be executed outside the Operating Companies normal working hours.

Itemisation 5 Separate items shall be provided for Labour in accordance with Chapter II paragraphs 3 and 4 and the following:

Group	Feature	
I	1	Ganger.
	2	Driver/machine operator.
	3	Skilled operative.
	4	Craftsman.
	5	Electrician.
	6	General operative.
II	1	During the Operating Company's normal working hours.
	2	Outside the Operating Company's normal working hours.

Labour

6 The items for Labour shall in accordance with the Preambles to Schedule of Rates and Prices General Directions include for:

Item coverage

(a) basic cost of labour for workmen,

(b) plus rates for skill,

(c) all other amounts of every kind paid in accordance with the rules of the appropriate wage fixing body,

(d) non-productive overtime and costs associated therewith,

(e) all bonuses, payments and incentives in excess of the basic cost of labour,

(f) national insurance and surcharges,(g) normal contract work, third party and employers liability insurances,

(h) annual and public holidays with pay and benefit scheme,

(i) non-contributory sick pay scheme,

(j) industrial training levy,

(k) redundancy payments,

(l) the Employment Rights Act 1996,

(m) Site supervision and staff including foremen and walking gangers,

(n) small tools, appliances and plant not provided for in paragraphs 7, 8 and 9 of this Series,

(o) protective clothing,

(p) transport within or related to the Unit,

(q) welfare facilities,

(r) establishment charges, overheads and profit,

(s) preparation, updating and submission to the Director of registers of staff, curricula vitae,

(t) travelling time to from within or related to the Unit,

(u) pension and life insurance benefits,

(v) cars, other vehicles, and car and other vehicle allowances,

(w) running and maintenance costs of cars and other vehicles.

Plant

Definitions

7 Basic cost of Plant and percentage adjustment:

(i) the basic cost of Plant shall be charged at the Hire Rates set down in Section 4 Plant of the *Schedules of Dayworks Carried Out Incidental to Contract Work* published by the Civil Engineering Contractors Association current forty two days prior to the latest date for the Final Tender Submission.

The notices and conditions set down in Section 4 Plant of the *Schedules of Dayworks Carried Out* shall not apply,

(ii) only the actual time plant is working or made available on the Site in accordance with sub paragraph (iv) of this paragraph 7 on Time Work Operations shall be chargeable,

(iii) the period stated in Section 4 Plant of the *Schedules of Dayworks Carried Out Incidental to Contract Work* for plant not listed shall be the minimum chargeable,

(iv) Plant to be made available on Site for a Time Work Operation and subject to an Order shall be charged at two-thirds of the rate obtained in accordance with sub-paragraph (i) of this paragraph 7 for the time the plant is made available but not used, subject to a maximum of 8 hours per Working Day and 40 hours in a working week,

(v) rates for mechanical and other special plant not normally classed as small tools and not included in the Schedule of Rates and Prices or Section 4 Plant of the *Schedules of Dayworks Carried Out Incidental to Contract Work* shall be paid for at hire rates reasonably related to those obtained in accordance with sub-paragraph (i) of this paragraph 7,

(vi) the Operating Company shall include for percentage adjustment to the basic cost of plant in Section 4 Plant of the *Schedule of Dayworks Carried Out Incidental to Contract Work*. The adjustment may be positive or negative.

Units 8 The units of measurement shall be:

(i) basic cost of plant …..... sum,

(ii) percentage adjustment to the basic cost of plant …..... percentage.

Itemisation 9 Separate items shall be provided for the basic cost of Plant in accordance with Chapter II paragraphs 3 and 4 and the following:

Group	Feature	
I	1	Basic cost of plant.
	2	Percentage adjustment to the basic cost of plant.

Basic Cost of Plant 10 The basic cost of Plant for Time Work shall in accordance with Section 4 Plant of the *Schedules of Dayworks Carried Out Incidental to Contract Work* and in accordance with the Preambles to Schedule of Rates and Prices General Directions include for:

Item coverage

(a) all associated costs irrespective of whether plant is owned, hired or leased,

(b) fuel,

(c) consumable stores,

(d) repairs,

(e) maintenance,

(f) insurance,

(g) establishment charges overheads and profit,

(h) be exclusive of operator, driver and attendants.

Percentage Adjustment to the Basic Cost of Plant

11 The percentage adjustment to the basic cost of Plant shall in accordance with the Preambles to Schedule of Rates and Prices General Directions include for:

Item coverage

(a) owned, hired or leased plant,

(b) general servicing, overheads and replacements,

(c) fuel distribution,

(d) transporting within or related to the Unit,

(e) all other charges and costs not recovered in basic cost of plant,

(f) discounts.

Materials

Definitions

12 Basic cost of materials and percentage adjustment:

(i) the basic cost of materials shall be charged at the net invoiced price of materials delivered to the Operating Company,

(ii) the Operating Company shall include for percentage adjustment to the basic cost of materials in Section 2 Materials of the *Schedule of Dayworks Carried Out Incidental to Contract Work.*

Units

13 The units of measurement shall be:

(i) basic cost of materials .....… sum,

(ii) percentage adjustment to the basic cost of materials ..... percentage.

Itemisation

14 Separate items shall be provided for the basic cost of materials in accordance with Chapter II paragraphs 3 and 4 and the following:

Group	Feature	
I	1	Basic cost of materials.
	2	Percentage adjustment to the basic cost of materials.

Basic Cost of Material

15 The basic cost of material for Time Work shall in accordance with Section 2 Materials of the *Schedules of Dayworks Carried Out Incidental to Contract Work* and in

accordance with the Preambles to Schedule of Rates and Prices General Directions include for:

Item coverage

(a) all costs of materials delivered to the Unit.

Percentage Adjustment to the Basic Cost of Materials

16 The percentage adjustment to the basic cost of materials shall in accordance with the Preambles to Schedule of Rates and Prices General Directions include for:

Item coverage

(a) ordering and taking delivery,

(b) unloading, storing and protecting,

(c) double handling,

(d) waste,

(e) discounts,

(f) establishment charges overheads and profit,

(g) delivery within or related to the Unit,

(h) all other charges and costs not recovered in basic cost of materials.

Supplementary Services

Definition

17 Services involving the payment of invoiced costs for supplementary services shall include:

(i) procurement of supplementary services for items that are not included in the Schedule of Rates and Prices or covered by a method of payment in Clause 10.1 of Schedule 1,

(ii) procurement of supplementary services shall not include labour plant and materials paid elsewhere in this Series 6500: Time Work Schedule,

(iii) tipping charges. Tipping charges incurred by the Operating Company shall only be separately measured in respect of arisings resulting from work ordered to be carried out on a Time Work basis.

Units

18 The units of measurement shall be:

(i) invoiced costs of accounts ..... sum,

(ii) percentage adjustment to invoiced costs …. percentage.

Measurement

19 The measurement of invoiced costs for payment of accounts for supplementary services shall be the value of invoices received, after any discounts given except in respect of any discount for prompt payment not exceeding 2½% which may be retained by the Operating Company.

The percentage adjustment shall be applied to the correctly submitted invoiced costs excluding Value Added Tax.

Itemisation

20 Separate items shall be provided for invoiced costs of accounts for supplementary services in accordance with Chapter II paragraphs 3 and 4 and the following:

Group	Feature

I	1	Invoiced costs of accounts.
	2	Percentage adjustment to invoiced costs.
II	1	Supplementary services.
	2	Nominated Subcontractors.
	3	Tipping charges.

Percentage Adjustment to Invoiced Costs for Supplementary Services.

21 The percentage adjustment to invoiced costs for supplementary services shall in accordance with the Preambles to the Schedule of Rates and Prices General Directions include for:

Item coverage

(a) general management of the relevant services,

(b) obtaining quotations and placing orders,

(c) payment of invoices and subsequent inclusion of the relevant amounts in monthly statements including any interest costs,

(d) any cost incurred by the Operating Company in respect of supplementary services,

(e) procurement (as Series 6300 paragraph 5),

(f) supervision (as Series 6300 paragraph 6),

(g) establishment charges overheads and profit,

(h) labours in connection with Nominated Subcontractors as detailed in the Preambles to the Schedule of Rates and Prices General Directions paragraph 8.

SCOTTISH MINISTERS' REQUIREMENTS

SCHEDULE 2 PART 1

METHOD OF MEASUREMENT

SERIES 6700: CHANGES IN SCOPE OF OPERATIONS

Changes in the Extent of the Unit Impacting on Core Operations Items in Series 6100

Definition

The provisions of this Series shall not apply to Operations, activities duties and responsibilities in any other part of the Trunk Road network outside the boundary of the Unit.

If at any time during the currency of this Contract the extent of the Unit increases or decreases over and above the changes included within Network 2, items in this Series shall be measured to cover the impact of the change on Core Operations items measured in Series 6100. Measurement of these items shall be deemed to cover the impact on all items within Series 6100.

Cumulative spans of bridges are the summation of the individual clear span(s) that makes up the bridge.

Units

1 The units of measurement shall be:

(a) addition/deduction for change in the extent of the Unit for carriageways ……. kilometre/month,

(b) addition/deduction for change in the extent the Unit for Structures ……. number/month.

Measurement

2 The measurement of the change in the extent of Trunk Roads in the Unit shall be the length of carriageway added to or removed from the Unit.

No deduction from the measurement of carriageway shall be made for structures.

Roundabouts and slip roads shall be measured as single carriageway.

For slip roads the length shall be the distance between the mid-point of the nominal channel at its junctions. Roundabouts shall be measured along the centre-line between the outer edges of its carriageway.

A footbridge shall be defined as the totality of the Structure.

Additions to the length of the road network shall be measured as a positive quantity. Deductions from the length of the road network shall be measured as a negative quantity.

Additions to the number of Structures shall be measured as a positive quantity. Deduction from the number of Structures shall be measured as a negative quantity.

Itemisation

3 Separate items shall be provided for changes in the extent of the Trunk Road network impacting on Core Operation items in Series 6100 in accordance with Chapter II paragraphs 3 and 4 and the following:

Group	Feature	
I	1	Addition/deduction for change in the extent of the Unit.
II	1	Carriageway.
	2	Structure.
III	1	Bridge with cumulative clear spans not exceeding 10 metres.
	2	Bridge with cumulative clear spans exceeding 10 metres but not exceeding 50 metres.
	3	Bridge with cumulative clear spans exceeding 50 metres.
	4	Footbridge.
	5	Sign gantry/signal gantry.

Note: Group III shall only apply to Group II feature 2.

Changes in the Extent of the Unit Impacting on Core Operation Items in Series 6100

4 The items for changes in the extent of the Unit impacting on Core Operation items in Series 6100 shall in accordance with the Preambles to the Schedule of Rates and Prices General Directions include for:

Item coverage

(a) all costs or savings occasioned by the change.

SCOTTISH MINISTERS' REQUIREMENTS

SCHEDULE 2 PART 1

METHOD OF MEASUREMENT

SERIES 6800: MISCELLANEOUS

Anti-Graffiti Coatings

Units 1 The units of measurement shall be:

(i) apply anti-graffiti coatings …….. square metre.

Measurement 2 The measurement of anti-graffiti coatings shall be the plane surface area.

Itemisation 3 Separate items shall be provided for anti-graffiti coatings in accordance with Chapter II paragraphs 3 and 4 and the following:

Group	Feature	
I	1	Anti-graffiti coatings.

Anti-Graffiti Coatings 4 The items for anti-graffiti coatings shall in accordance with the Preambles to Schedule of Rates and Prices General Directions include for:

Item coverage

(a) preparation of surfaces,

(b) masking and other measures to protect adjacent untreated work and the removal of masking and other measures upon completion,

(c) preparing materials for applications,

(d) complying with any special requirements in respect of ambient conditions including the containment of dust and debris and for intervals between successive operations and applications,

(e) multiple coat as recommended by manufacturer,

(f) sealer/primer as recommended by manufacturer,

(g) preparation and supply of system and data sheets,

(h) measures for protection.

Vehicle Restraint Systems

Units 6 The unit of measurement shall be:

(i) re-tensioning safety barriers ……..metre.

Itemisation 7 Separate items shall be provided for re-tensioning safety barriers in accordance with Chapter II paragraphs 3 and 4 and the following:

Group	Feature	
I	1	Re-tensioning.
II	1	Safety barrier.

		2	Wire rope.
	III	1	Single sided.
		2	Double sided.

Re-tensioning Safety Barrier 8 The items for re-tensioning safety barrier shall in accordance with the Preambles to Schedule of Rates and Prices General Directions include for:

Item coverage

(a) applying a releasing agent to adjuster assembly,

(b) ensuring the nut is capable of travel along the whole of the threaded portion of the adjuster bolt,

(c) remove existing and replace beam to post screws, nut and washers,

(d) tighten adjuster bolt to correct torque appropriate to the ambient temperature,

(e) tighten lock nut to correct torque,

(f) tighten beam to post bolt to the correct torque,

(g) adjust wire rope rigging screws to achieve tension appropriate to the ambient temperature,

(h) additional adjuster assemblies.

Drainage

Units 9 The units of measurement shall be:

(i) low pressure high volume jetting …..metre,

(ii) extra over any item of low pressure high volume jetting ……..metre.

Itemisation 10 Separate items shall be provided for low pressure high volume jetting in accordance with Chapter II paragraphs 3 and 4 and the following:

Group	Feature	
I	1	Low pressure high volume jetting.
II	1	Piped drain.
	2	Combined drainage and kerb system.
	3	Linear drainage channel system.
III	1	Different diameters.
	2	Any diameter.
	3	Any type.
IV	1	Extra over for use of root cutter.

Low Pressure High Volume Jetting 11 The items for low pressure high volume jetting shall in accordance with the Preambles to Schedule of Rates and Prices General Directions include for:

Item coverage

(a) cleaning existing drainage systems (as Series 500 paragraph 84).

Extra Over any item of Jetting for use of Root Cutter

12 The items for extra over any item of jetting for use of root cutter shall in accordance with the Preambles to Schedule of Rates and Prices General Directions include for:

Item coverage

(a) all additional costs for use of root cutter.

Cleaning of Street Furniture

Units

13 The unit of measurement shall be:

(a) cleaning of sign faces, sign faces on gantry, marker posts hazard posts, ECP cylinders, bollard, refuge beacon……..number,

(b) painted safety fence…….linear metre.

Itemisation

14 Separate items shall be provided for cleaning of street furniture in accordance with Chapter II paragraphs 3 and 4 and the following:

Group	Feature	
I	1	Cleaning.
II	1	Sign face.
	2	Marker post, hazard post, ECP cylinder, bollard or refuge beacon.
	3	Painted safety fence.
III	1	Not exceeding 5.0 square metres in area.
	2	Exceeding 5.0 square metres but not exceeding 10.0 square metres.
	3	Exceeding 10.0 square metres but not exceeding 20.0 square metres.

Note: Group III shall only apply to Group II feature 1.

Cleaning of Street Furniture

15 The items for cleaning of street furniture shall in accordance with the Preambles to Schedule of Rates and Prices General Directions include for:

Item coverage

(a) detergent cleaner,

(b) water supply and all costs in connection therewith,

(c) cleaning spillage on hard surfaces below signs.

Landscape Maintenance

Grass Cutting

Units

16 The unit of measurement shall be:

(i) cutting close mown grass, amenity grass, grass banks and ditches, grass in road verge in selected full width cuts……square metre,

(ii) close mown grass trimming edges, trimming edges, amenity grass trimming edges, close mown grass reforming edges, grass reforming edges, amenity grass reforming edges, …….linear metre,

(iii) cutting grass in verge in 1.2m wide swathe cut …… kilometre.

Itemisation 17 Separate items shall be provided for grass cutting, trimming edges and reforming edges in accordance with Chapter II paragraphs 3 and 4 and the following:

Group	Feature	
I	1	Grass cutting.
II	1	In close mown areas.
	2	In amenity areas.
	3	In banks and ditches.
	4	In highway verge in 1.20 metre swathe cut.
	5	In highway verge in selected full width cuts.

Grass Cutting 18 The items for grass cutting shall in accordance with the Preambles to Schedule of Rates and Prices General Directions include for:

Item coverage

(a) mowing, cutting or strimming,

(b) taking precautions to avoid any damage,

(c) cutting around posts, signs and superficial obstructions,

(d) cutting around trees, cutting around flowering bulbs,

(e) removing cuttings from paved areas and other hardstandings,

(f) removing seats, litter bins, temporary signs and other similar features, and replacing upon completion,

(g) removal of litter, stones and other deleterious materials,

(h) dispersal of cuttings from non-hard areas evenly over the sward.

Hedge Trimming

Units 19 The units of measurement shall be:

(i) trimming hedges …….linear metre.

Itemisation 20 Separate items shall be provided for hedge trimming in accordance with Chapter II paragraphs 3 and 4 and the following:

Group	Feature	
I	1	Trimming hedges.
II	1	Less than 2 metres high.
	2	Over 2 metres high.
III	1	One side and top.
	2	Both sides and top.

Hedge Trimming 21 The items for hedge trimming shall in accordance with the Preambles to Schedule of Rates and Prices General Directions include for:

Item coverage

(a) trimming,

(b) taking precautions to avoid damage,

(c) disposal of all hedge cuttings, litter and debris,

(d) where appropriate shredding and disposal on Site,

(e) removal of clippings lodged in top or sides of the hedge,

(f) removal of all litter and debris from within the Structure of the hedge.

Litter Clearance

Units 26 The units of measurement shall be:

(i) litter clearance …… kilometre.

Measurement 27 Measurement shall be the linear length of associated highway irrespective of the width of clearance.

Itemisation 28 Separate items shall be provided for keeping land clear of litter and refuse in accordance with Chapter II paragraphs 3 and 4 and the following:

Group	Feature	
I	1	Litter clearance from highway.
II	1	Grade C to B.
	2	Grade D to B.

Litter clearance 29 The items for litter clearance shall in accordance with the Preambles to Schedule of Rates and Prices General Directions include for:

Item coverage

(a) picking up litter,

(b) placing in sacks,

(c) disposal of material (as Series 600 paragraph 39).

SCOTTISH MINISTERS' REQUIREMENTS

SCHEDULE 2 PART 1

METHOD OF MEASUREMENT

SERIES 7000: LUMP SUM PRICES

Payment of Accounts

Definition

1 Services involving the payment of accounts shall include but not be limited to the following:

(a) payment of Undertakers' accounts,

(b) payment of Network Rail Possession charge accounts.

Units

2 The units of measurement shall be:

(i) invoiced costs of accounts ..... sum,

(ii) percentage to be added to invoiced costs.

Measurement

3 The measurement of invoiced costs for payment of accounts shall be the value of invoices received, after any discounts given except in respect of any discount for prompt payment not exceeding 2½% which may be retained by the Operating Company.

The percentage adjustment shall be applied to the invoiced costs excluding Value Added Tax.

Itemisation

4 Separate items shall be provided for invoiced costs of accounts in accordance with Chapter II paragraphs 3 and 4 and the following:

Group	Feature	
I	1	Invoiced costs of Undertakers' accounts.
	2	Invoiced costs of Network Rail accounts.
	3	Invoiced costs of Marine Scotland Act licences
	4	Invoiced costs of Forth Ports Works licences
	5	Pension Fund Payments excluding Additional Pension Costs paid to the LGPS
	6	New Employee Pension Contributions excluding Excess New Employee Contributions
	7	Lease payments to Crown Estate for lease of slipway
	8	Percentage to be added to invoiced costs of Undertakers' accounts.
	9	Percentage to be added to invoiced costs of Network Rail accounts.

Percentage to be Added to Invoiced Costs for

5 The percentage to be added to invoiced costs of Undertakers' accounts. shall in accordance with the Preambles to Schedule of Rates and Prices General Directions include for:

Undertakers' Accounts.

Item coverage

(a) payment of invoices and subsequent inclusion of the relevant amounts in monthly statements including any interest costs,

(b) any other costs in connection with the payment of invoices.

Percentage to be Added to Invoiced Costs for Network Rail Possession Charge Accounts

6 The percentage to be added to invoiced costs of Network Rail Possession charge accounts shall in accordance with the Preambles to Schedule of Rates and Prices General Directions include for:

Item Coverage

(a) payment of invoices and subsequent inclusion of the relevant amounts in monthly statements including any interest costs,

(b) all costs in connection with working on or in the vicinity of Network Rail land,

(c) any other costs in connection with the payment of invoices.

Lump Sum Quotations

Units

7 The units of measurement shall be:

(i) Lump Sum Quotation for the construction of Schemes costing less than £350,000 …….sum.

Itemisation

8 Separate items shall be provided for Lump Sum Quotations in accordance with Chapter II paragraphs 3 and 4 and the following:

Group	Feature	
I	1	Lump Sum Quotation.
	2	Lump Sum Quotation for the Construction of Schemes costing less than £350,000.

Lump Sum Quotation

9 The item for Lump Sum Quotation shall in accordance with the Preambles to Schedule of Rates and Prices General Directions include for:

Item coverage

(a) all costs to undertake the Operations as a Lump Sum Quotation.

Lump Sum Quotation for the construction of Schemes costing less than £350,000

10 The item for Lump Sum Quotation for the construction of Schemes costing less than £350,000 shall in accordance with the Preambles to Schedule of Rates and Prices General Directions include for:

Item coverage

(a) all costs to undertake the Operations as a Lump Sum Quotation.

SCOTTISH MINISTERS' REQUIREMENTS

SCHEDULE 3 PART 1

OVERALL REQUIREMENTS

CONTENTS **Page No.**

1.	**OVERALL REQUIREMENTS**	**1**
1.1	General	1
1.2	Meetings and Seminars	1
1.3	Disclosure	1
1.4	Statutory Functions	2
1.5	Community Planning Support	2
1.6	Forth Bridges Forum Support	2
1.7	Choose Life	2

SCOTTISH MINISTERS' REQUIREMENTS

SCHEDULE 3 PART 1

OVERALL REQUIREMENTS

1. OVERALL REQUIREMENTS

1.1 General

1.1.1 In executing the requirements of this Contract, the Operating Company shall:

(i) operate with full regard for the safety of the Operating Company's employees, road users and any other persons on the Unit or on land adjacent to the Unit,

(ii) minimise the risk of damage and disturbance to, and destruction of, third party property,

(iii) plan, manage and execute Operations to minimise delay to road users,

(iv) minimise the risks of any potentially adverse effects to the environment as a result of both undertaking Operations and the use of the Trunk Roads,

(v) provide and communicate timely, relevant and accurate information to users of the Principal Crossings and other stakeholders,

(vi) support the objectives and activities of the Forth Bridges Forum to ensure that thorough and effective stakeholder engagement remains at the heart of the operation and maintenance of the Principal Crossings,

(vii) respond to all Incidents within the timescales stated in this Contract to minimise the adverse effects on road users, and

(viii) treat all members of the public and all other road users with due courtesy and consideration.

1.2 Meetings and Seminars

1.2.1 The Operating Company shall attend any meetings at the Director's office or at such other locations as the Director shall reasonably require.

1.2.2 The Director may organise seminars and working groups related to improving the methods by which Trunk Road management and maintenance activities are carried out. The Operating Company shall attend such seminars and working groups when required to do so in writing by the Director.

1.3 Disclosure

1.3.1 The Operating Company shall ensure that all personnel, including subcontractors, engaged, or proposed to be engaged, for the purposes of this Contract in positions directly interacting with the public and or personnel undertaking vehicle recovery work on the Trunk Road network are appointed only after the Operating Company has completed satisfactorily a disclosure process through Disclosure Scotland appropriate to the position or role of the individual concerned.

1.3.2 The Operating Company shall ensure that all vehicle recovery personnel shall also comply with the requirements set out in the Specification.

1.4 Statutory Functions

1.4.1 The Operating Company shall perform, on behalf of the Scottish Ministers, the Statutory Functions stipulated in this Contract to be performed by the Operating Company.

1.4.2 The Operating Company shall carry out the Operations in such a way that they do not impede the Scottish Ministers' or others' Statutory Functions in relation to the Unit or other adjoining roads in executing those functions.

1.5 Community Planning Support

1.5.1 The Scottish Ministers have resolved to support community planning in terms of the *Local Government in Scotland Act 2003*. The Operating Company shall provide such support and attend such meetings as required by the Director in this regard.

1.6 Forth Bridges Forum Support

1.6.1 The Operating Company shall support the activities of the Forth Bridges Forum which meets on a quarterly basis. The Operating Company shall nominate senior representatives who will attend and participate in such meetings for consent by the Director prior to any attendance or participation. The Operating Company shall hold membership of, and shall support, the functions of the Forth Bridges Forum as detailed in Schedule 3 Part 9.

1.6.2 The Operating Company shall provide administrative and secretarial support to the Forth Bridges Forum including as a minimum:

(i) organising Forth Bridges Forum meetings,

(ii) preparing and issuing the agenda,

(iii) preparing and issuing papers,

(iv) taking and issuing minutes, and

(v) placing (or arranging the placement of) papers on the website of the Forth Bridges Forum as appropriate.

1.7 Choose Life

1.7.1 The Operating Company shall support the activities of the Scottish Government's *Choose Life, the National Strategy and Action Plan to Prevent Suicide in Scotland* including attendance at meetings historically attended by FETA and taking due cognisance of the guidance contained in NHS Health Scotland's *Guidance on Action to Reduce Suicides at Locations of Concern* and the Scottish Government's *Refreshing the National Strategy and Action Plan*.

1.7.2 As a minimum, the Operating Company shall be available to attend all Fife/Tayside Choose Life group meetings. When the Edinburgh Choose Life group is holding a meeting, the Operating Company shall consider attending when a suitable member (or members) of staff is available and or the agenda is of particular relevance to the requirements of this Contract.

SCOTTISH MINISTERS' REQUIREMENTS

SCHEDULE 3 PART 2

EXTENT OF THE UNIT

CONTENTS **Page No.**

1.	**THE UNIT**	**1**
1.1	Location	1
1.2	Extent	1
1.3	Interfaces with Adjacent Trunk Road Units	1
1.4	Interfaces with Other Roads	1
1.5	Motorways and Special Roads	2

ANNEX 3.2/A – Location of the Unit **3**

ANNEX 3.2/B – Trunk Roads in Network 1 and Network 2 **7**

ANNEX 3.2/C – Trunk Roads within Network 1 which will be realigned for Network 2 **11**

ANNEX 3.2/D –Trunk Roads within Network 2 realigned from Network 1 **15**

ANNEX 3.2/E – Trunk Roads which will be included in Network 2 **19**

ANNEX 3.2/F – Other Trunk Road items which will be included in Network 1 **23**

ANNEX 3.2/G – Other Trunk Road items which will be included in Network 2 **29**

ANNEX 3.2/H – Items within the Trunk Road boundary which are excluded from Network 1 **38**

ANNEX 3.2/I – Items within the Trunk Road boundary which are excluded from Network 2 **42**

ANNEX 3.2/J – Drawings **46**

SCOTTISH MINISTERS' REQUIREMENTS

SCHEDULE 3 PART 2

EXTENT OF THE UNIT

1. THE UNIT

1.1 Location

1.1.1 The location of the Unit is shown in Annex 3.2/A.

1.2 Extent

1.2.1 The extent of Network 1 is:

(i) Trunk Roads as stated in Annex 3.2/B and Annex 3.2/C of this Part, extending to the Trunk Road boundary, excluding items stipulated in Annex 3.2/H of this Part, and

(ii) Other Trunk Road items stipulated in Annex 3.2/F of this Part.

1.2.2 The extent of Network 2 is:

(i) Trunk Roads as stated in Annex 3.2/B, Annex 3.2/D and Annex 3.2/E of this Part, extending to the Trunk Road boundary, excluding items stipulated in Annex 3.2/I of this Part, and

(ii) Other Trunk Road items stipulated in Annex 3.2/G of this Part.

1.3 Interfaces with Adjacent Trunk Road Units

1.3.1 The interfaces at the Unit boundary with adjacent Trunk Road units, and with some roads of other roads authorities, are as shown on the drawings in Annex 3.2/J of this Part.

1.4 Interfaces with Other Roads

1.4.1 The interfaces at the Unit boundary with local authority and other roads are not always identifiable. The document *Extent of the Trunk Road Network* published by Transport Scotland, identifies protocols for determining the boundaries between the Trunk Roads in the Unit and local authority roads for the purposes of this Contract.

1.4.2 The Operating Company shall comply with these protocols to determine the extent of any of its responsibilities and those of Works Contractors for all Operations, Schemes and Works at such interfaces, if it is not stipulated elsewhere.

1.4.3 The Operating Company shall liaise with local authorities, other relevant public bodies and other organisations responsible for Trunk Roads and other roads adjoining the Unit. The Operating Company shall thereby manage any local arrangements for maintenance and any documented cross-boundary arrangements in a coordinated manner that secures the safety of road users at all times, irrespective of contractual responsibilities.

1.4.4 The Operating Company shall identify and record any instances of such arrangements not conforming to the protocols set out in *Extent of the Trunk Road Network*. The Operating Company shall inform the Director in writing within 14 days of identification of such instances.

1.5 Motorways and Special Roads

1.5.1 The following Trunk Roads within the Unit are Motorways:

(i) **M90/A90 Edinburgh – Fraserburgh** Trunk Road, and

(ii) **A823(M) Pitreavie Spur** Trunk Road.

1.5.2 In addition to the motorways, there are no roads designated as Special Roads in Network 1.

1.5.3 In addition to the motorways, roads designated as Special Roads in Network 2 are shown in Table 1.5.2.A.

1.5.4 The Scottish Minsters may designate other roads to be Special Roads.

Table 1.5.2.A – Special Roads in Network 2

Route	Start	End	Comment
A90	Dalmeny	Scotstoun Jn	
A90	Scotstoun Jn	Queensferry Jn	
A90 NB off slip to Queensferry R/bout	A90 NB Diverge	Queensferry R/bout	
A90 SB on slip from Queensferry R/bout	Queensferry R/bout	A90 SB Merge	

Notes:

NB – North Bound
SB – South Bound
JN – Junction
R/bout – Roundabout.

This is Annex 3.2/A to Schedule 3 Part 2 referred to in the foregoing Agreement between Scottish Ministers and Amey LG Limited.

SCOTTISH MINISTERS' REQUIREMENTS

SCHEDULE 3 PART 2

EXTENT OF THE UNIT

ANNEX 3.2/A – Location of the Unit

SCOTTISH MINISTERS' REQUIREMENTS

SCHEDULE 3 PART 2

EXTENT OF THE UNIT

ANNEX 3.2/A – Location of the Unit

1. LOCATION OF UNIT

1.1 Drawing

The location of the Unit and the included Trunk Roads are shown on Drawing No S3P2 001, which is included in Annex 3.2/J.

This is Annex 3.2/B to Schedule 3 Part 2 referred to in the foregoing Agreement between Scottish Ministers and Amey LG Limited.

SCOTTISH MINISTERS' REQUIREMENTS

SCHEDULE 3 PART 2

EXTENT OF THE UNIT

ANNEX 3.2/B – Trunk Roads in Network 1 and Network 2

SCOTTISH MINISTERS' REQUIREMENTS

SCHEDULE 3 PART 2

EXTENT OF THE UNIT

ANNEX 3.2/B – Trunk Roads in Network 1 and Network 2

1. ROADS

1.1 Trunk Roads in the Unit

1.1.1 The following Trunk Roads are in Network 1 and Network 2:

(i) **M90/A90 Edinburgh – Fraserburgh Trunk Road** from the M9 Junction 1A at Humbie as shown on Drawing No S3P2 002 leading generally north-eastwards for a distance of 3.9 kilometres or thereby to the Scotstoun Junction of the A90 as shown on Drawing No S3P2 003,

(ii) **M90/A90 Edinburgh – Fraserburgh Trunk Road** from A90 Dalmeny leading generally westwards for a distance of 1 kilometres or thereby to A90 Scotstoun Junction as shown on Drawing No S3P2 003,

(iii) **M90/A90 Edinburgh – Fraserburgh Trunk Road** from A90 Echline Junction as shown on Drawing No S3P2 004 leading generally northwards for a distance of 4.2 kilometres or thereby to A90 Ferrytoll Junction as shown on Drawing No S3P2 005, including the Forth Road Bridge. To become A9000 at Commencement of Service Date 2,

(iv) **M90/A90 Edinburgh – Fraserburgh Trunk Road** from A90 Ferrytoll Junction as shown on Drawing No S3P2 005 leading generally northwards for a distance of 7.6 kilometres or thereby to M90 Junction 3 Halbeath as shown on Drawing No S3P2 006, and

(v) **A823(M) Pitreavie Spur Trunk Road** from its junction with the M90 at Masterton (M90 Junction 2) leading generally westwards for a distance of 1.5 kilometres or thereby to its junction with the A823 but excluding Pitreavie Roundabout Dunfermline as shown on Drawing No S3P2 007.

All drawings referred to in this paragraph are contained in Annex 3.2/J of this Part.

This is Annex 3.2/C to Schedule 3 Part 2 referred to in the foregoing Agreement between Scottish Ministers and Amey LG Limited.

SCOTTISH MINISTERS' REQUIREMENTS

SCHEDULE 3 PART 2

EXTENT OF THE UNIT

ANNEX 3.2/C – Trunk Roads within Network 1 which will be realigned for Network 2

SCOTTISH MINISTERS' REQUIREMENTS

SCHEDULE 3 PART 2

EXTENT OF THE UNIT

ANNEX 3.2/C – Trunk Roads within Network 1 which will be realigned for Network 2

1. TRUNK ROADS

1.1 Trunk Roads within Network 1 which will be realigned.

1.1.1 The following Trunk Roads are in Network 1:

(i) **M90/A90 Edinburgh – Fraserburgh Trunk Road** from A90 Scotstoun Junction as shown on Drawing No S3P2 003 leading generally north westwards for a distance of 1.5 kilometres or thereby to A90 Echline Junction as shown on Drawing No S3P2 004, and

(ii) **M90/A90 Edinburgh – Fraserburgh Trunk Road** Ferrytoll Junction as shown on Drawing No S3P2 005.

1.1.2 All drawings referred to in this annex are contained in Annex 3.2/J of this Part.

This is Annex 3.2/D to Schedule 3 Part 2 referred to in the foregoing Agreement between Scottish Ministers and Amey LG Limited.

SCOTTISH MINISTERS' REQUIREMENTS

SCHEDULE 3 PART 2

EXTENT OF THE UNIT

ANNEX 3.2/D –Trunk Roads within Network 2 realigned from Network 1

SCOTTISH MINISTERS' REQUIREMENTS

SCHEDULE 3 PART 2

EXTENT OF THE UNIT

ANNEX 3.2/D –Trunk Roads within Network 2 realigned from Network 1

1. TRUNK ROADS

1.1 Realigned Trunk Roads within Network 2

1.1.1 The following realigned Trunk Roads will be within Network 2:

(i) **M90/A90 Edinburgh – Fraserburgh Trunk Road** from A90 Scotstoun Junction as shown on Drawing No S3P2 008 leading generally north westwards for a distance of 1.5 kilometres or thereby to A90 Echline Junction as shown on Drawing No S3P2 009, and

(ii) **M90/A90 Edinburgh – Fraserburgh Trunk Road** M90 Junction 1B Ferrytoll as shown on Drawing No S3P2 010.

1.1.2 All drawings referred to in this annex are contained in Annex 3.2/J of this Part.

This is Annex 3.2/E to Schedule 3 Part 2 referred to in the foregoing Agreement between Scottish Ministers and Amey LG Limited.

SCOTTISH MINISTERS' REQUIREMENTS

SCHEDULE 3 PART 2

EXTENT OF THE UNIT

ANNEX 3.2/E – Trunk Roads which will be included in Network 2

SCOTTISH MINISTERS' REQUIREMENTS

SCHEDULE 3 PART 2

EXTENT OF THE UNIT

ANNEX 3.2/E – Trunk Roads which will be included in Network 2

1. TRUNK ROADS

1.1 Trunk Roads which will be included in Network 2

1.1.1 The following Trunk Roads will be in Network 2:

(i) the proposed **M90/A90 Edinburgh – Fraserburgh Trunk Road** from M90 Junction 1 Scotstoun as shown on Drawing No S3P2 008 leading generally north westwards for a distance of 2.6 kilometres or thereby to M90 Junction 1A Queensferry as shown on Drawing No S3P2 011, and

(ii) the proposed **M90/A90 Edinburgh – Fraserburgh Trunk Road** from M90 Junction 1A Queensferry leading generally northwards for a distance of 4.4 kilometres or thereby to M90 Junction 1B Ferrytoll as shown on Drawing No S3P2 010, including the Queensferry Crossing.

1.1.2 All drawings referred to in this annex are contained in Annex 3.2/J of this Part.

This is Annex 3.2/F to Schedule 3 Part 2 referred to in the foregoing Agreement between Scottish Ministers and Amey LG Limited.

SCOTTISH MINISTERS' REQUIREMENTS

SCHEDULE 3 PART 2

EXTENT OF THE UNIT

ANNEX 3.2/F – Other Trunk Road items which will be included in Network 1

SCOTTISH MINISTERS' REQUIREMENTS

SCHEDULE 3 PART 2

EXTENT OF THE UNIT

ANNEX 3.2/F – Other Trunk Road items which will be included in Network 1

1. Included Items

1.1 Other Trunk Road items which will be included in Network 1

1.1.1 The following items are included in Network 1:

(i) items shown on Drawing No S3P2 004 including:

(a) Ferrymuir Gait from the B800 leading generally northwards for a distance of 0.3 kilometres or thereby to the public car park,

(b) the public car park at Ferrymuir Gait,

(c) the access road from the public car park entrance to the Traffic Scotland National Control Centre car park,

(d) the Traffic Scotland National Control Centre car park,

(e) the Forth Road Bridge car park,

(f) the Forth Road Bridge access road from the Forth Road Bridge depot to the Forth Road Bridge storage area, and

(g) the grassed area to the north of the Traffic Scotland National Control Centre building.

(ii) items shown on Drawing No S3P2 013 including:

(a) the Forth Road Bridge public viewing area,

(b) the building containing the public toilet and the kiosk,

(c) the Hopetoun Site Office, and

(d) the Forth Road Bridge boathouse,

(iii) areas of land used for:

(a) Landscape Areas as referred to in the routine maintenance and management function of the Integrated Roads Information System,

(b) snow fences, and

(c) other such features,

in accordance with the provisions of this Contract.

(iv) parcels of land identified in Table 3.2.F.1.

Table 3.2.F.1 – Parcels of land included in Network 1

Identifier	Name	Drawing No
32	Land under the Forth Road Bridge between dismantled railway and the Firth of Forth	S3P2 013
31	Hopetoun Crossroads North	S3P2 013
30	Hopetoun Crossroads South	S3P2 013
28	Forth Road Bridge car park	S3P2 013
29	North of the Traffic Scotland National Control Centre building	S3P2 013
27	Traffic Scotland National Control Centre car park	S3P2 013
25	Access road from the public car park entrance to the Traffic Scotland National Control Centre	S3P2 013
26	Public car park at Ferrymuir Gait	S3P2 013
24	Forth Road Bridge storage area	S3P2 013
23	Ferrymuir Gait	S3P2 013
22	Land at Echline Triangle	S3P2 013
21	Land by Kirkliston Road East	S3P2 013
51	Land between the Firth of Forth and B981	S3P2 013
72	Station Garage at the junction of B981, Chapel Street and Chapel Place, Inverkeithing	S3P2 021
1	Kirkliston Shelter Belt 1	S3P2 014
2	Kirkliston Shelter Belt 2	S3P2 014
3	Kirkliston Shelter Belt 3	S3P2 014
4	Culvert outfall	S3P2 014

(v) variable message sign Structures that are part of the Traffic Scotland Equipment, listed in Table 3.2.F.2 "Structures outwith the Trunk Road boundary".

(vi) advance direction signs with integrated variable message signs, listed in Table 3.2.F.3 "Advance Direction Signs outwith the Trunk Road boundary but included in Network 1".

1.1.2 All drawings referred to in this annex are contained in Annex 3.2/J of this Part.

Table 3.2.F.2 – Structures outwith the Trunk Road boundary

Structure Purpose	**Type** *(Gantry, Cantilever, Centrally mounted)*	**Structure Reference Number**	**Other Reference Number**	**Route**	**Easting**	**Northing**	**Location Description**
VMS	Cantilever	A90 0 G1	K2	A90	315341	677109	A90 N East of Dalmeny
VMS	Post mounted	M90 1-1 G19	J1	A921	312461	683528	A921W ¼ mile E of M90 J1 Admiralty
VMS	Cantilever	M90 1-1 G11	J5	A921	313540	683519	A921W ¾ mile E of M90 J1
VMS	Post mounted	A90 0 G10	K1	A90	318735	674926	A90N, Barnton
VMS	Post mounted	A90 0 G11	TBC	A90	319561	674982	A90, Clermiston

Table 3.2.F.3 – Advance Direction Signs outwith the Trunk Road boundary but included in Network 1

Location	**FRC Sign Ref**	**FRC Sign Face Drawing**
B980	012-004 (39)	FRC-FITS-JG-DWG-1200-039,RO7
Castle Drive	012-003 (40)	FRC-FITS-JG-DWG-1200-040,R08
A823	012-002 (41)	FRC-FITS-JG-DWG-1200-041,

This is Annex 3.2/G to Schedule 3 Part 2 referred to in the foregoing Agreement between Scottish Ministers and Amey LG Limited.

SCOTTISH MINISTERS' REQUIREMENTS

SCHEDULE 3 PART 2

EXTENT OF THE UNIT

ANNEX 3.2/G – Other Trunk Road items which will be included in Network 2

SCOTTISH MINISTERS' REQUIREMENTS

SCHEDULE 3 PART 2

EXTENT OF THE UNIT

ANNEX 3.2/G – Other Trunk Road items which will be included in Network 2

1. Included Items

1.1 Items which will be included in Network 2

1.1.1 The following items will be included in Network 2:

(i) items identified in Annex 3.2/F to this Part,

(ii) items shown on Drawing No S3P2 019 including:

(a) Public footway / cycleway from A90 PTC, formerly the A90, to the B981,

(b) Service road to the North Abutment of the Queensferry Crossing and Admiral's House, and

(c) Public access track linking to the foreshore.

(iii) areas of land used for:

(a) Landscaped Areas as referred to in the routine maintenance and management function of the Integrated Roads Information System, and

(b) snow fences,

in accordance with the provisions of this Contract.

(iv) traffic signals, associated equipment, ducts and chambers at:

(a) Queensferry Junction including on the roundabout and approach roads, and

(b) Ferrytoll Junction including intersections on Ferry Toll Road to the west of Ferrytoll Roundabout.

(v) parcels of land identified in Table 3.2.G.1.

Table 3.2.G.1 – Parcels of Land included in Network 2

Identifier	Name	Drawing no.
5		S3P2-015
6		S3P2-015
7		S3P2-015
8		S3P2-015
9		S3P2-016

Identifier	Name	Drawing no.
10		S3P2-016
11		S3P2-016
12		S3P2-016
13		S3P2-016
14		S3P2-016
15		S3P2-016
16		S3P2-015
17		S3P2-015
18		S3P2-015
19		S3P2-015
20		S3P2-015
33		S3P2-016
34		S3P2-016
35		S3P2-016
36		S3P2-016
37		S3P2-016
38		S3P2-016
39		S3P2-016
40		S3P2-016
41		S3P2-016
42		S3P2-016
43		S3P2-016
44		S3P2-016
45		S3P2-017
46		S3P2-017
47		S3P2-017
48		S3P2-017
49		S3P2-017
50		S3P2-017
52		S3P2-019
53		S3P2-019
54		S3P2-019
55		S3P2-019
56		S3P2-019
57		S3P2-020
58		S3P2-020
59		S3P2-020
60		S3P2-020
61		S3P2-020
62		S3P2-020
63		S3P2-020
64		S3P2-020
65		S3P2-020
66		S3P2-020
67		S3P2-020
68		S3P2-021
69		S3P2-020
70		S3P2-021
71		S3P2-021

(vi) all boundary fences on the A90 at Scotstoun Junction and around or within parcels of land identified in paragraph 1.1.1(v) of this Annex, and

(vii) variable message sign Structures that are part of the Traffic Scotland Equipment, listed in Table 3.2.G.2 "Structures outwith the Trunk Road boundary".

(viii) advance direction signs with integrated variable message signs, listed in Table 3.2.G.3 "Advance Direction Signs outwith the Trunk Road boundary but included in Network 2".

1.1.2 All drawings referred to in this annex are contained in Annex 3.2/J of this Part.

Table 3.2.G.2 – Structures outwith the Trunk Road boundary

Structure Purpose	**Type** *(Gantry, Cantilever, Centrally mounted)*	**TRBDB Reference Number**	**Other Reference Number**	**Route**	**Easting**	**Northing**	**Location Description**
	None						

Table 3.2.G.3 – Advance Direction Signs outwith the Trunk Road boundary but included in Network 2

Location	**FRC Sign Ref**	**FRC Sign Face Drawing**
KMD towards Ferrytoll Junction	107.28(.18)	FRC-P-SRM-003-D-NT-SIG-12107-C1
Hope Street towards Ferrytoll Junction	108.11	FRC-P-SRM-003-D-NT-SIG-12108-C1
A904 East at Echline Junction	120.13	FRC-P-SRM-008-D-NT-SIG-12120-C2
A904 West Echline Junction	121.03	FRC-P-SRM-008-D-NT-SIG-12121-C1
A904 East at Queensferry Junction	121.09	FRC-P-SRM-008-D-NT-SIG-12121-C1
A904 West at Queensferry Junction	121.10	FRC-P-SRM-008-D-NT-SIG-12121-C1

This is Annex 3.2/H to Schedule 3 Part 2 referred to in the foregoing Agreement between Scottish Ministers and Amey LG Limited.

SCOTTISH MINISTERS' REQUIREMENTS

SCHEDULE 3 PART 2

EXTENT OF THE UNIT

ANNEX 3.2/H – Items within the Trunk Road boundary which are excluded from Network 1

SCOTTISH MINISTERS' REQUIREMENTS

SCHEDULE 3 PART 2

EXTENT OF THE UNIT

ANNEX 3.2/H – Items within the Trunk Road boundary which are excluded from Network 1

1. Excluded Items

1.1 Items within the Trunk Road boundary which are excluded from Network 1

1.1.1 The following items within the Trunk Road boundary are excluded from Network 1:

(i) the following items shown on Drawing No S3P2 013 are excluded:

(a) the Ferrymuir Gait service station,

(b) the Ferrymuir Gait service station signs,

(c) the Traffic Scotland National Control Centre and adjacent paving, and

(d) the substation at the Traffic Scotland National Control Centre.

(ii) the electronic components of variable message signs that are the responsibility of the Traffic Scotland Operations and Infrastructure Services Contractor. For the avoidance of doubt, the electronic components of variable message signs which were formerly the responsibility of FETA will be the responsibility of the Operating Company under this Contract during Service Delivery Period 1. All variable message sign Structures are the responsibility of the Operating Company.

1.1.2 All drawings referred to in this annex are contained in Annex 3.2/J of this Part.

This is Annex 3.2/I to Schedule 3 Part 2 referred to in the foregoing Agreement between Scottish Ministers and Amey LG Limited.

SCOTTISH MINISTERS' REQUIREMENTS

SCHEDULE 3 PART 2

EXTENT OF THE UNIT

ANNEX 3.2/I – Items within the Trunk Road boundary which are excluded from Network 2

SCOTTISH MINISTERS' REQUIREMENTS

SCHEDULE 3 PART 2

EXTENT OF THE UNIT

ANNEX 3.2/I – Items within the Trunk Road boundary which are excluded from Network 2

1. Excluded Items

1.1 Items within the Trunk Road boundary which are excluded from Network 2

1.1.1 The following items within the Trunk Road boundary will be excluded from Network 2:

(i) items identified in Annex 3.2/H to this Part,

(ii) the following items shown on Drawing No S3P2 019:

(a) Admiral's House,

(b) St Margaret's Hope, and

(iii) the electronic components of variable message signs that are the responsibility of the Traffic Scotland Operations and Infrastructure Services Contractor. For the avoidance of doubt, variable message sign Structures are the responsibility of the Operating Company.

1.1.2 All drawings referred to in this annex are contained in Annex 3.2/J of this Part.

This is Annex 3.2/J to Schedule 3 Part 2 referred to in the foregoing Agreement between Scottish Ministers and Amey LG Limited.

SCOTTISH MINISTERS' REQUIREMENTS

SCHEDULE 3 PART 2

EXTENT OF THE UNIT

ANNEX 3.2/J – Drawings

SCOTTISH MINISTERS' REQUIREMENTS

SCHEDULE 3 PART 2

EXTENT OF THE UNIT

ANNEX 3.2/J – Drawings

1. Drawings

1.1 Interfaces Drawings

1.1.1 The following drawings, which are included in this Annex, show interfaces with adjacent Trunk Road units and roads that are the responsibility of other authorities:

(i)	Drawing No S3P2 001	Location of Unit,
(ii)	Drawing No S3P2 002	M9 Junction 1A,
(iii)	Drawing No S3P2 003	A90 Scotstoun Junction – Network 1,
(iv)	Drawing No S3P2 004	A90 Echline Junction – Network 1,
(v)	Drawing No S3P2 005	A90 Ferrytoll Junction – Network 1,
(vi)	Drawing No S3P2 006	M90 Junction 3 Halbeath,
(vii)	Drawing No S3P2 007	A823(M) Pitreavie Spur,
(viii)	Drawing No S3P2 008	M90 Junction 1 Scotstoun – Network 2,
(ix)	Drawing No S3P2 009	A9000 Echline Junction – Network 2,
(x)	Drawing No S3P2 010	M90 Junction 1B Ferrytoll – Network 2,
(xi)	Drawing No S3P2 011	M90 Junction 1A Queensferry – Network 2,
(xii)	Drawing No S3P2 012	M90 Junction 1 Admiralty.

1.2 Other Drawings

1.2.1 The following drawings, which are included in this Annex, show other Trunk Road items which are included in the Unit:

(i)	Drawing No S3P2 013	Other Trunk Road items which will be included in the Unit,
(ii)	Drawing No S3P2 014	Other Trunk Road items which will be included in the Unit,
(iii)	Drawing No.S3P2 015	Other Trunk Road items which will be included in the Unit,
(iv)	Drawing No.S3P2 016	Other Trunk Road items which will be included in the Unit,
(v)	Drawing No.S3P2 017	Other Trunk Road items which will be included in the Unit.
(vi)	Drawing No.S3P2 018	Other Trunk Road items which will be included in the Unit.

(vii)	Drawing No.S3P2 019	Other Trunk Road items which will be included in the Unit.
(viii)	Drawing No.S3P2 020	Other Trunk Road items which will be included in the Unit.
(ix)	Drawing No.S3P2 021	Other Trunk Road itemswhich will be included in the Unit.

1.3 Drawing Details

1.3.1 For details of the items shown on the drawings, reference shall be made to the Records for the Unit including as a minimum the Integrated Road Information System, as-built drawings and land plans.

1.3.2 The drawings have been prepared using information available at the time and areas under construction may be subject to change.

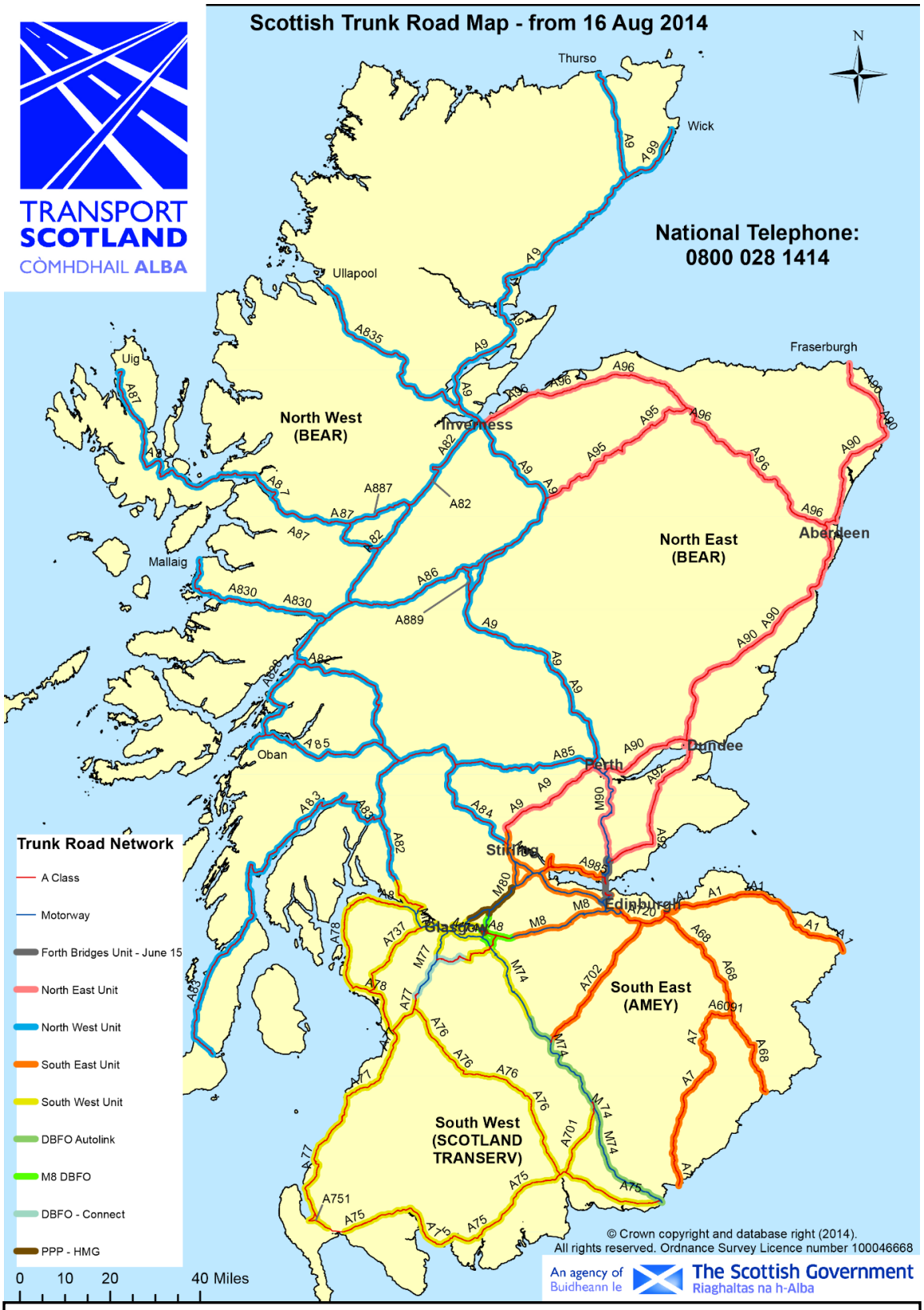

S3P2 – 001A

sign

by ……...Roy Brannen…….

on …..…… December 2014

at ……Glasgow……..…

……..
Authorised Signatory

by ……

on ….. December 2014

at ……Glasgow……..…

……..
Director/Company Secretary/
Authorised Signatory*

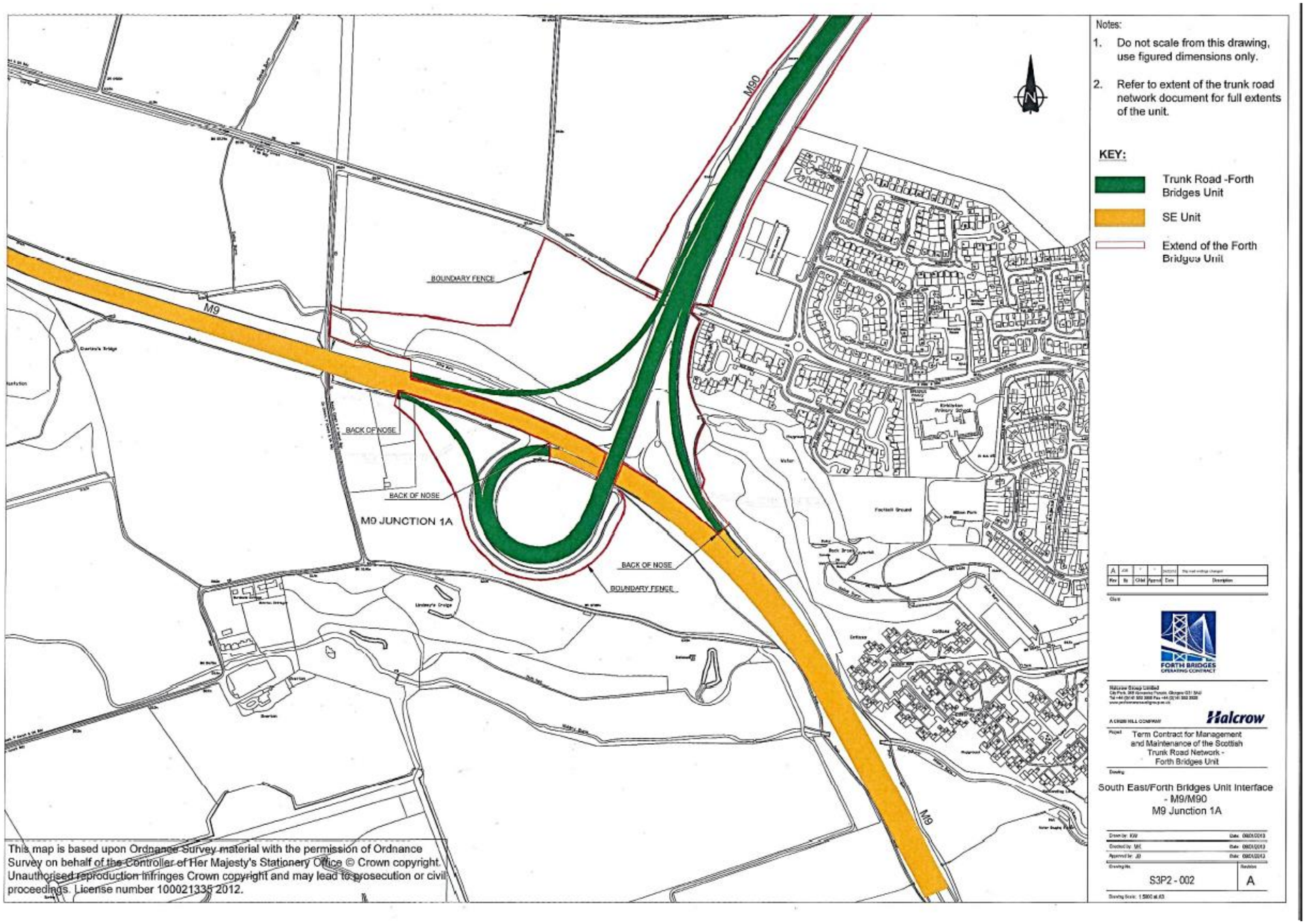

signed for and on behalf of The Scottish Ministers

by ……...Roy Brannen…….

on …..…… December 2014

at ……Glasgow……..…

……..
Authorised Signatory

signed for and on behalf of AMEY LG Limited

by ……

on ….. December 2014

at ……Glasgow……..…

……..…
Director/Company Secretary/
Authorised Signatory*

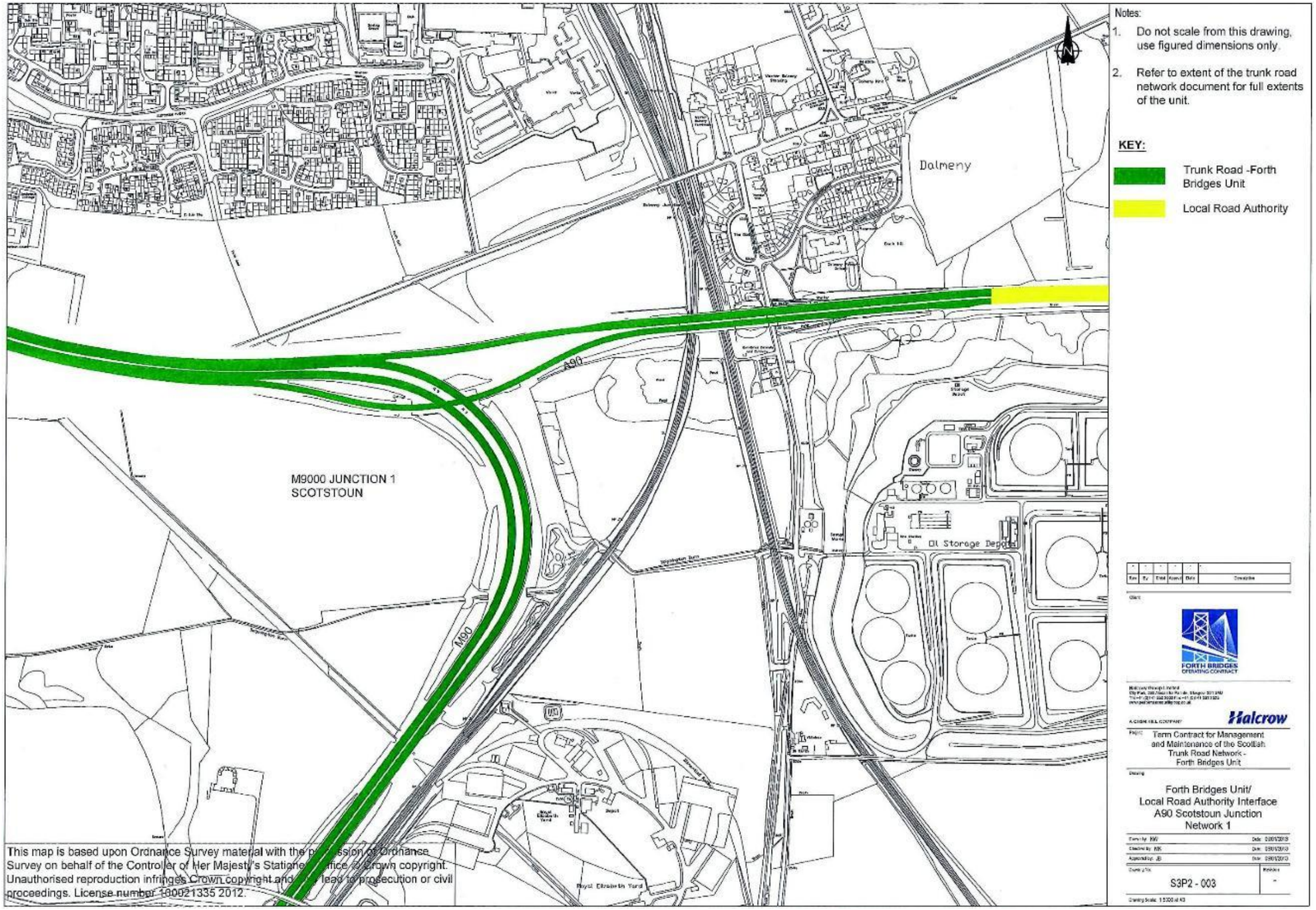

signed for and on behalf of The Scottish Ministers

by ……...Roy Brannen…….

on …..…… December 2014

at ……Glasgow……..…

……..
Authorised Signatory

signed for and on behalf of AMEY LG Limited

by ……

on ….. December 2014

at ……Glasgow……..…

……..
Director/Company Secretary/
Authorised Signatory*

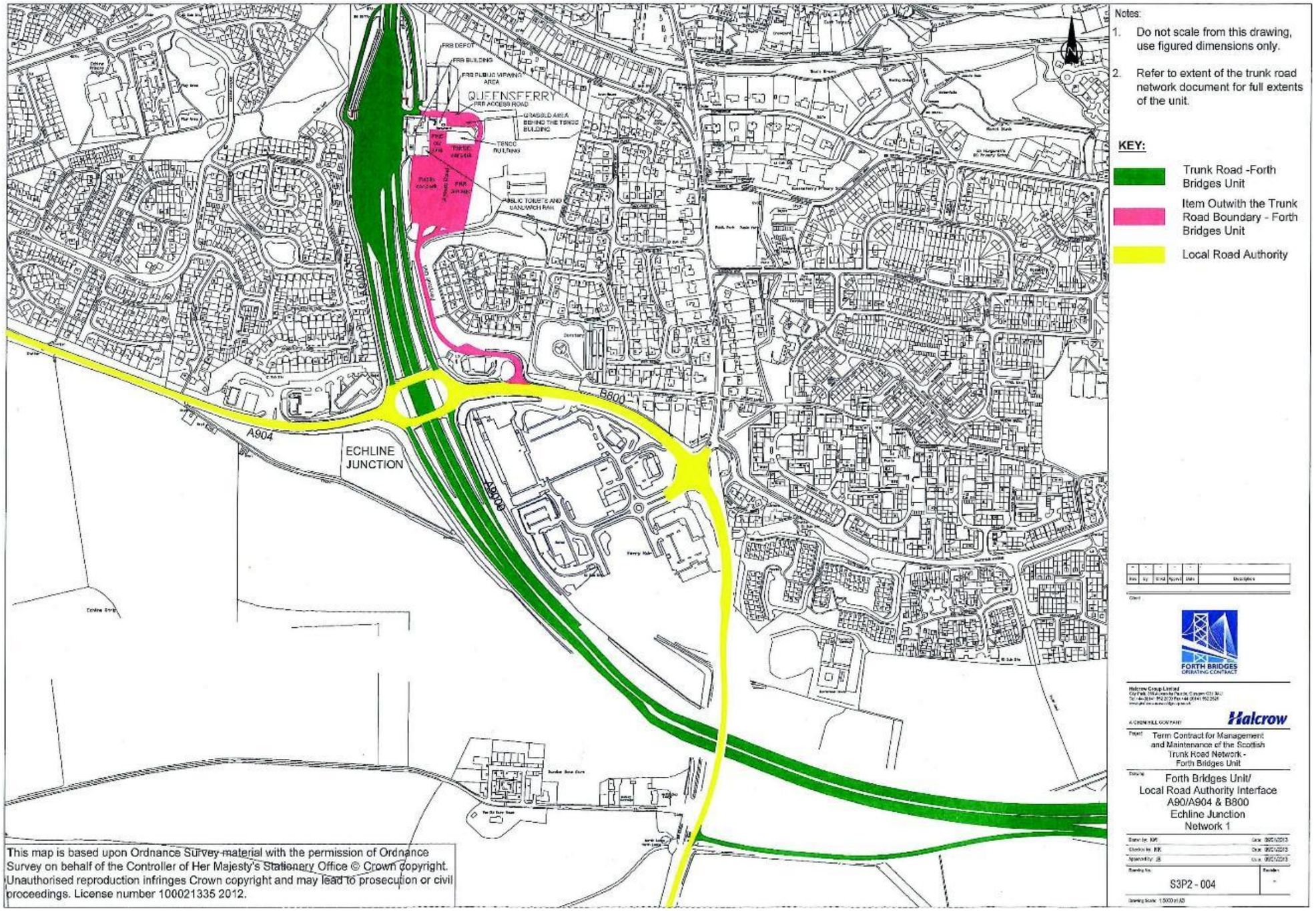

signed for and on behalf of The Scottish Ministers

by ……...Roy Brannen…….

on …..…… December 2014

at ……Glasgow……..…

……..
Authorised Signatory

signed for and on behalf of AMEY LG Limited

by ……

on ….. December 2014

at ……Glasgow……..…

……..
Director/Company Secretary/ Authorised Signatory*

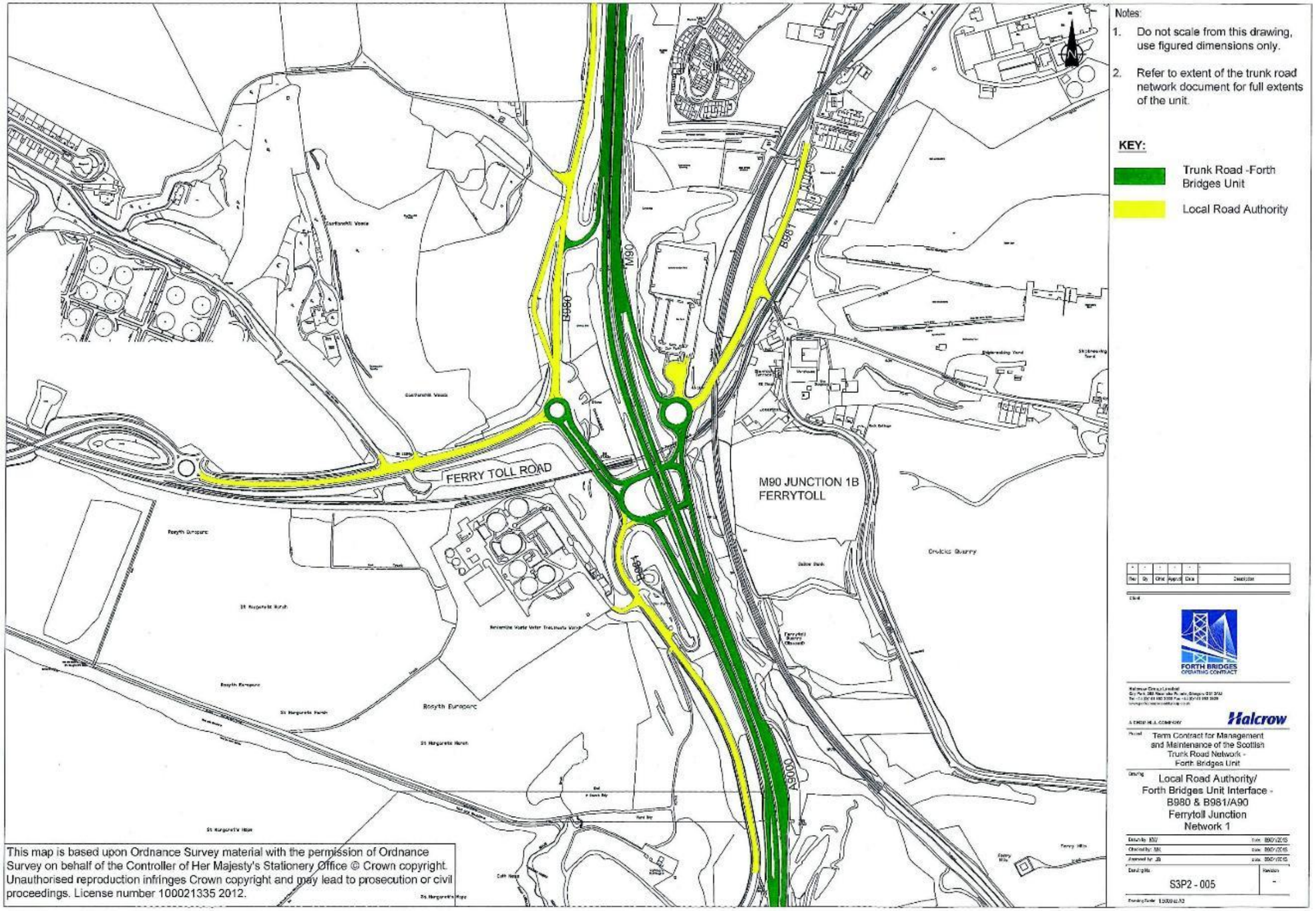

signed for and on behalf of The Scottish Ministers

by ……...Roy Brannen…….

on …..…… December 2014

at ……Glasgow……..…

……..
Authorised Signatory

signed for and on behalf of AMEY LG Limited

by ……

on ….. December 2014

at ……Glasgow……..…

……..
Director/Company Secretary/ Authorised Signatory*

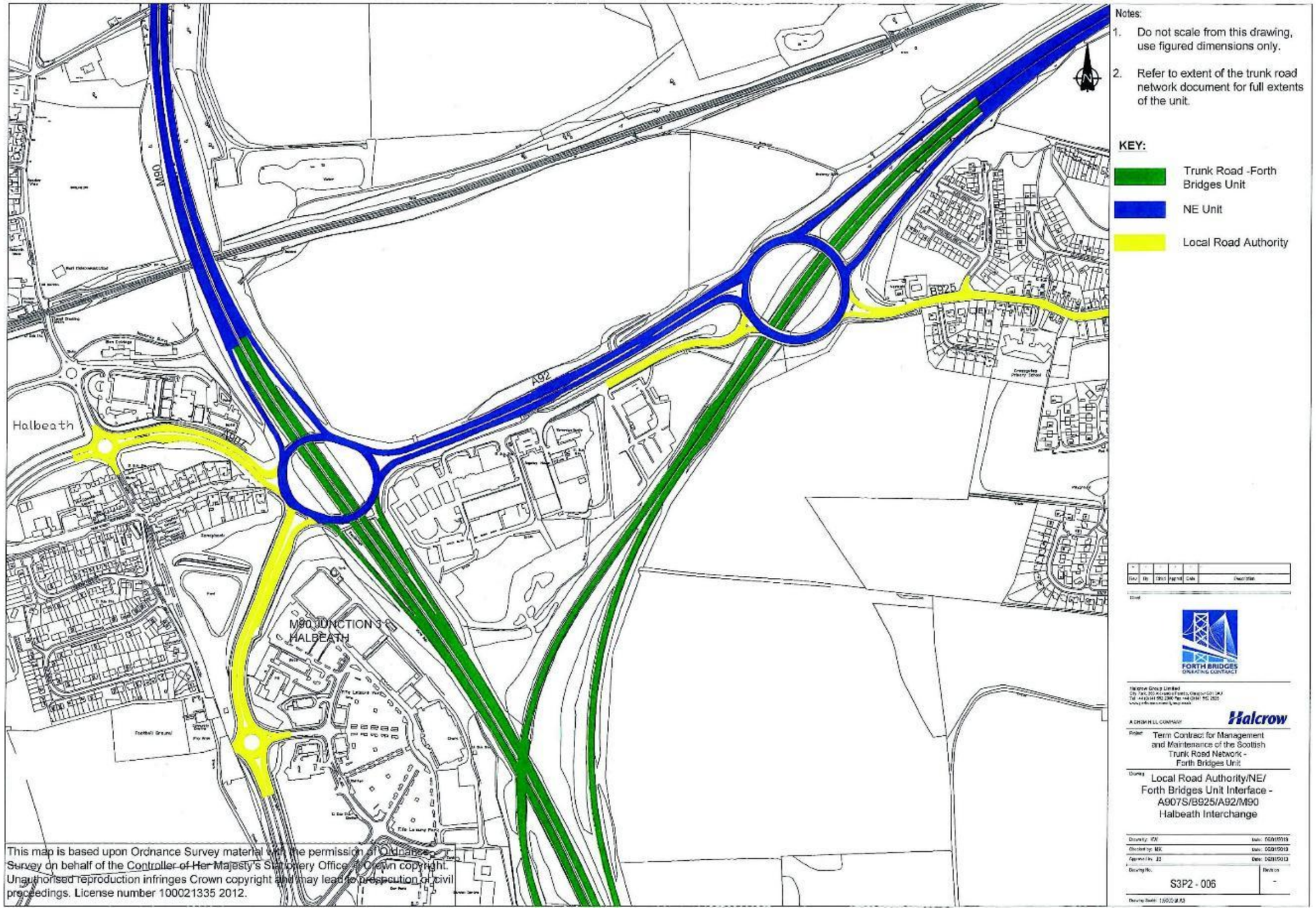

signed for and on behalf of The Scottish Ministers

by ……..Roy Brannen…….

on …..…… December 2014

at ……Glasgow……..…

……

Authorised Signatory

signed for and on behalf of AMEY LG Limited

by ……

on ….. December 2014

at ……Glasgow……..…

……

Director/Company Secretary/ Authorised Signatory*

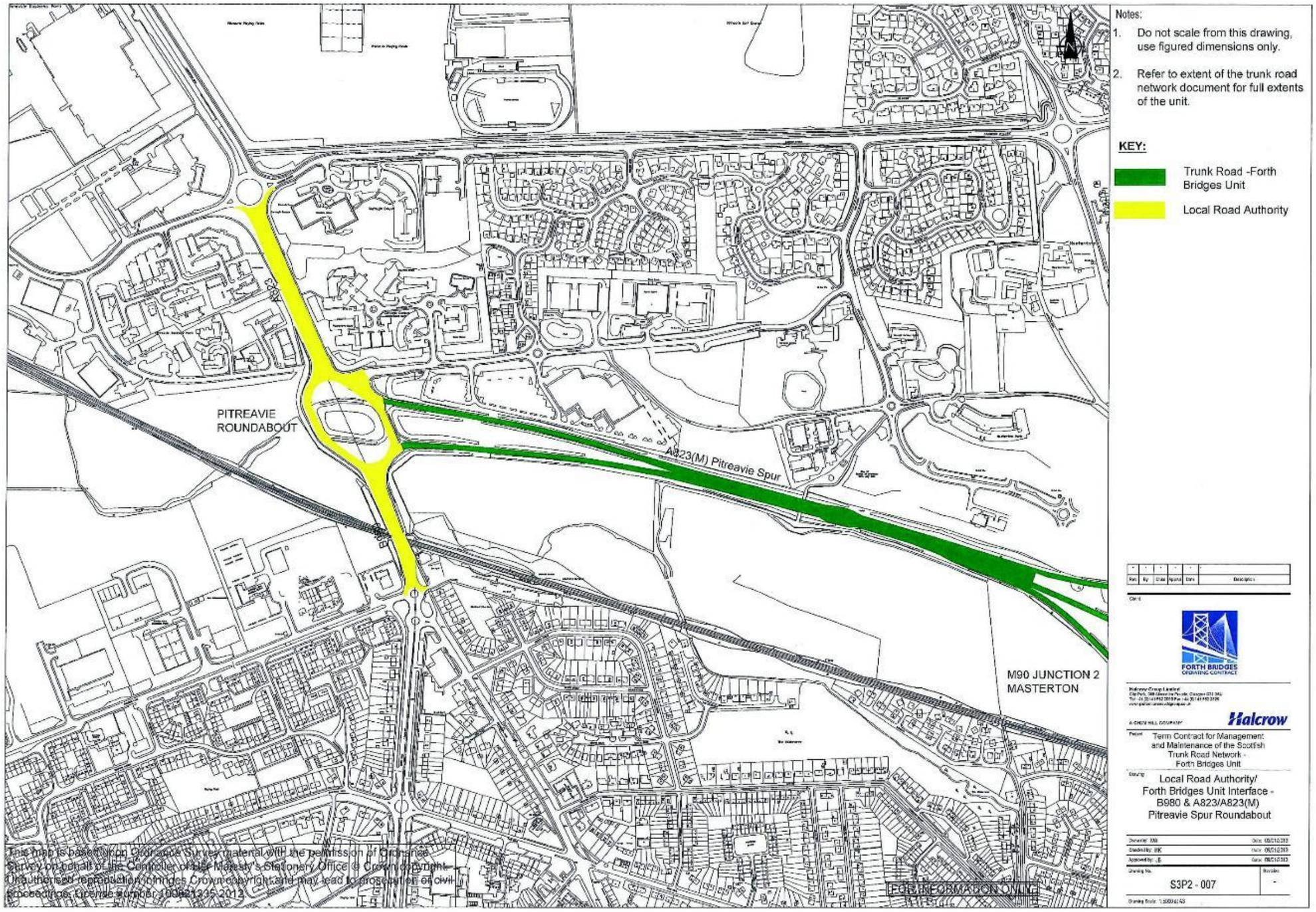

signed for and on behalf of The Scottish Ministers

by ……...Roy Brannen…….

on …..…… December 2014

at ……Glasgow……..…

……..
Authorised Signatory

signed for and on behalf of AMEY LG Limited

by ……

on ….. December 2014

at ……Glasgow……..…

……..
Director/Company Secretary/
Authorised Signatory*

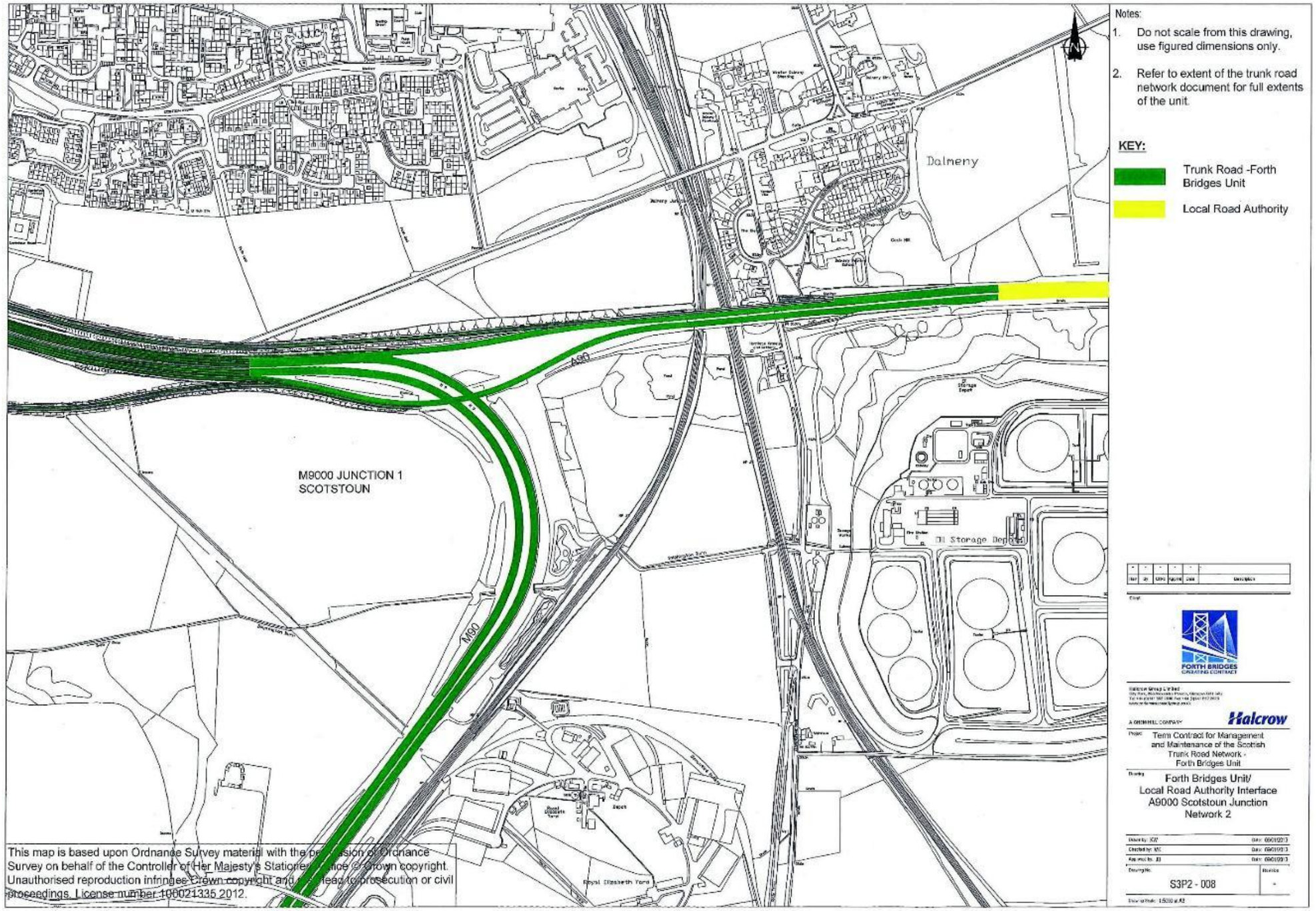

signed for and on behalf of The Scottish Ministers

by ……..Roy Brannen…….

on …..…… December 2014 …….

Authorised Signatory

at ……Glasgow……..…

signed for and on behalf of AMEY LG Limited

by ……

on ….. December 2014 ……..

Director/Company Secretary/ Authorised Signatory*

at ……Glasgow……..…

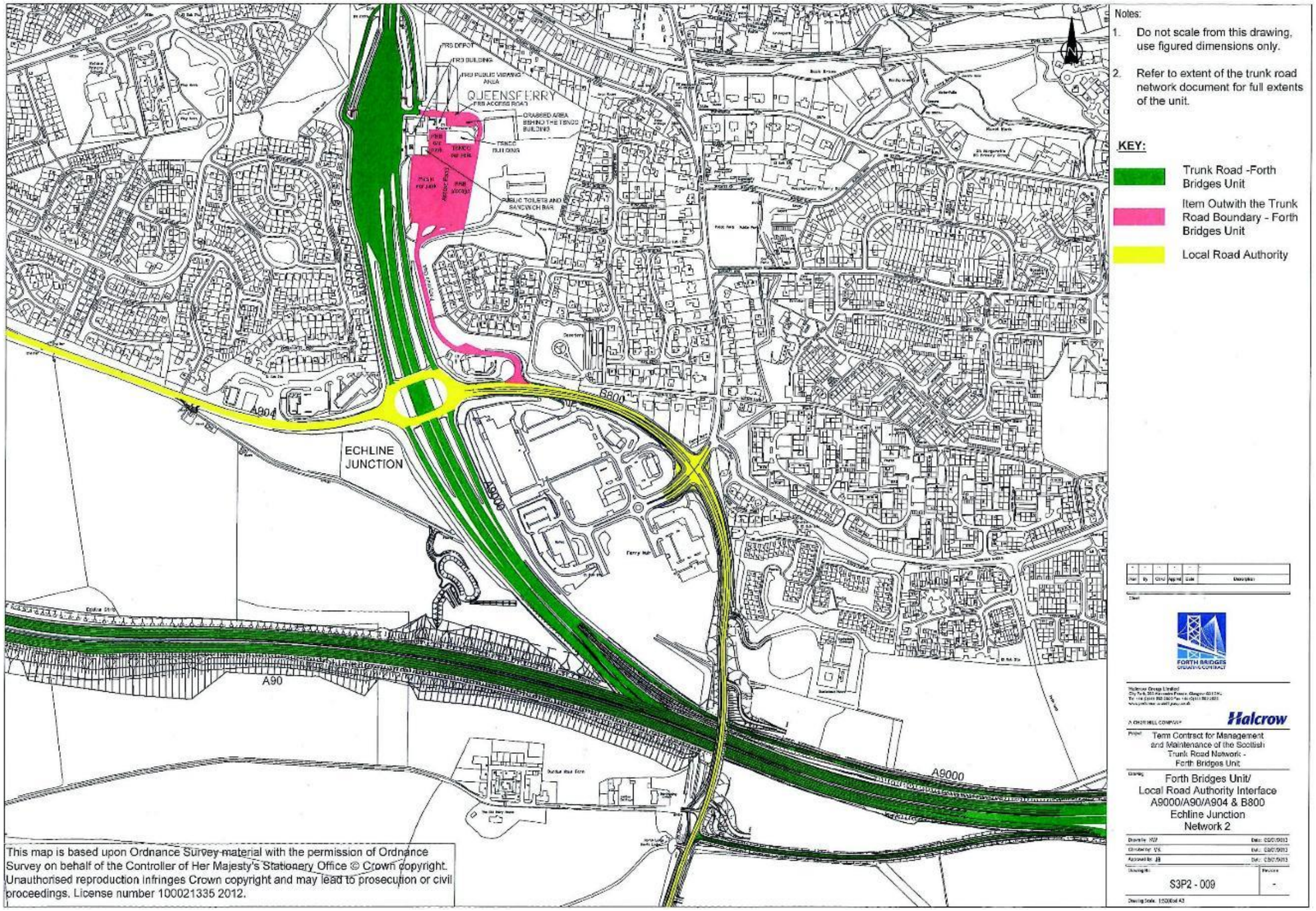

signed for and on behalf of The Scottish Ministers

by ……...Roy Brannen…….

on …..…… December 2014

at ……Glasgow……..…

……..
Authorised Signatory

signed for and on behalf of AMEY LG Limited

by ……

on ….. December 2014

at ……Glasgow……..…

……..
Director/Company Secretary/ Authorised Signatory*

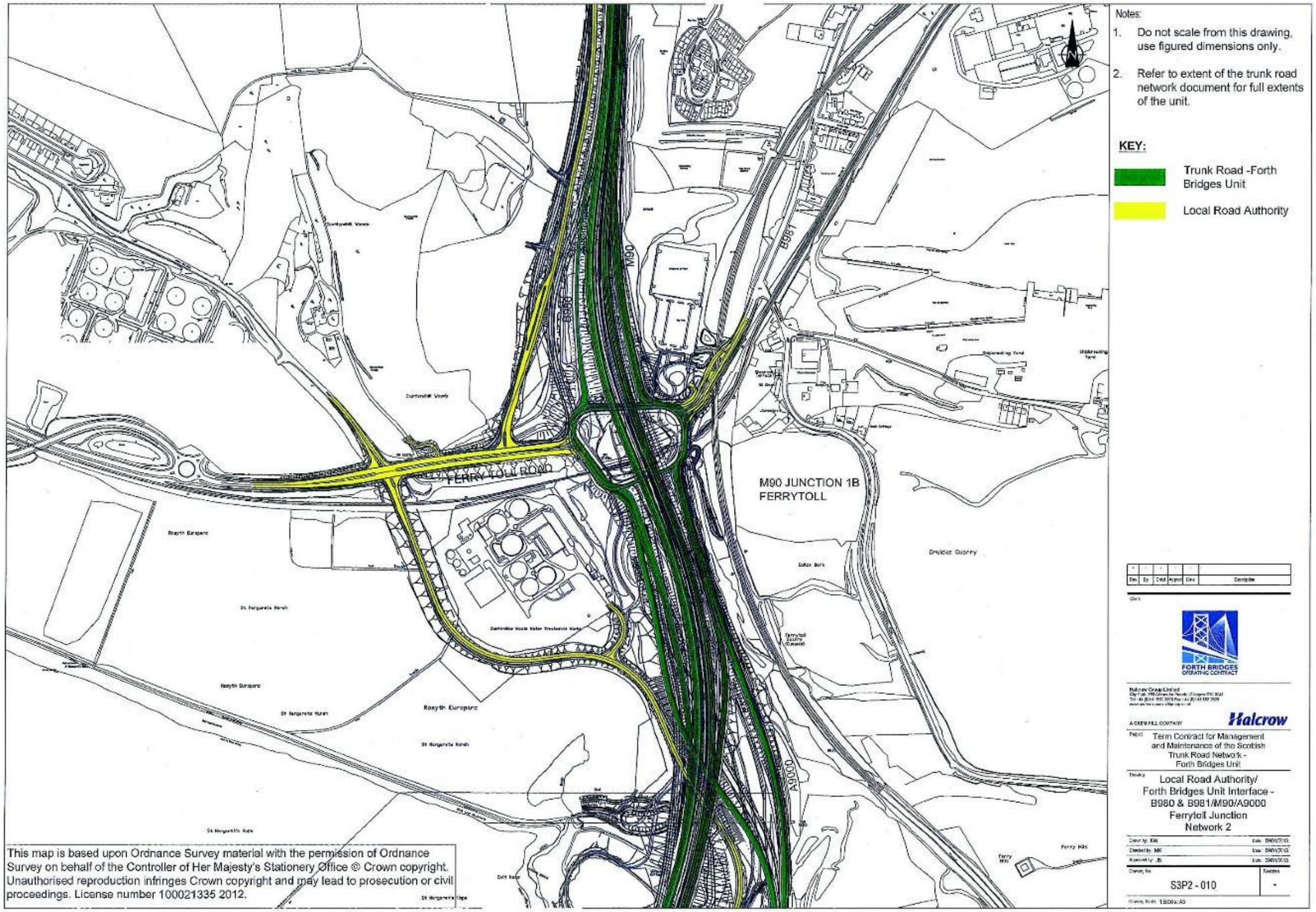

signed for and on behalf of The Scottish Ministers

by ……...Roy Brannen…….

on …..…… December 2014

at ……Glasgow……..…

……..
Authorised Signatory

signed for and on behalf of AMEY LG Limited

by ……

on ….. December 2014

at ……Glasgow……..…

……..
Director/Company Secretary/ Authorised Signatory*

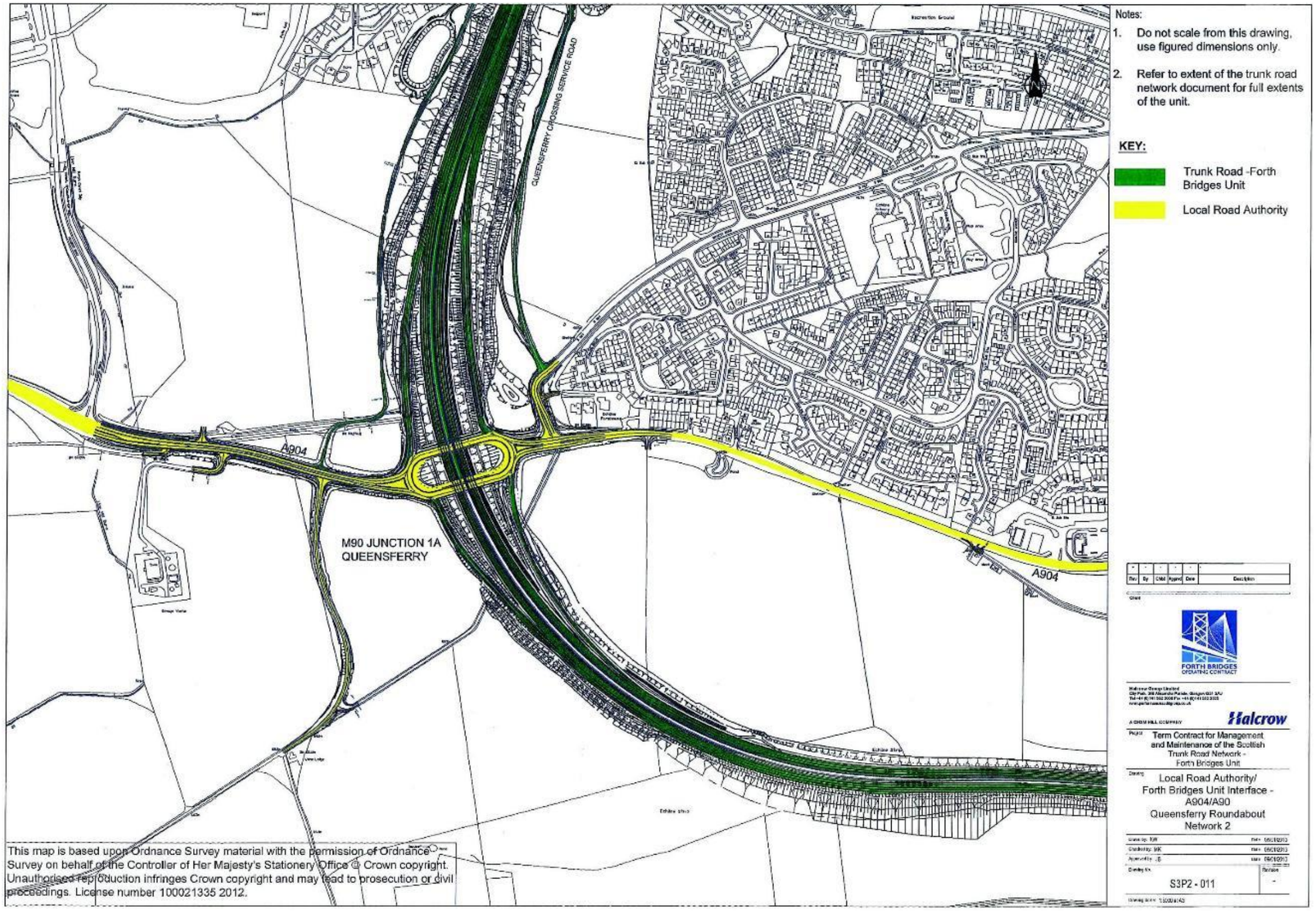

signed for and on behalf of The Scottish Ministers

by ……..Roy Brannen…….

on …..…… December 2014 …….

Authorised Signatory

at ……Glasgow……..…

signed for and on behalf of AMEY LG Limited

by ……

on ….. December 2014 ……..

Director/Company Secretary/ Authorised Signatory*

at ……Glasgow……..…

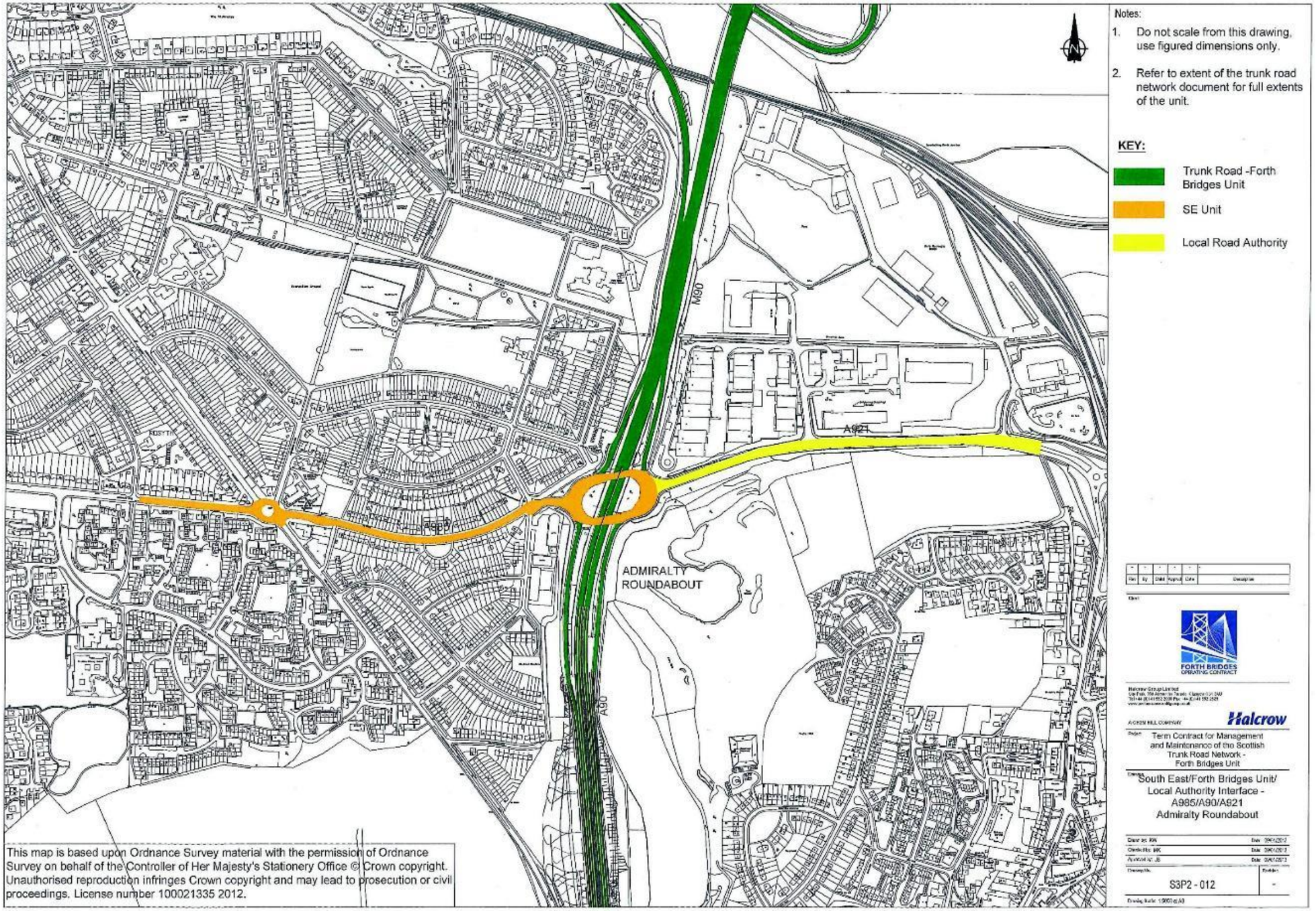

signed for and on behalf of The Scottish Ministers

by ……..Roy Brannen…….

on ……. December 2014

at ……Glasgow……

……

Authorised Signatory

signed for and on behalf of AMEY LG Limited

by ……

on ….. December 2014

at ……Glasgow……

……

Director/Company Secretary/ Authorised Signatory*

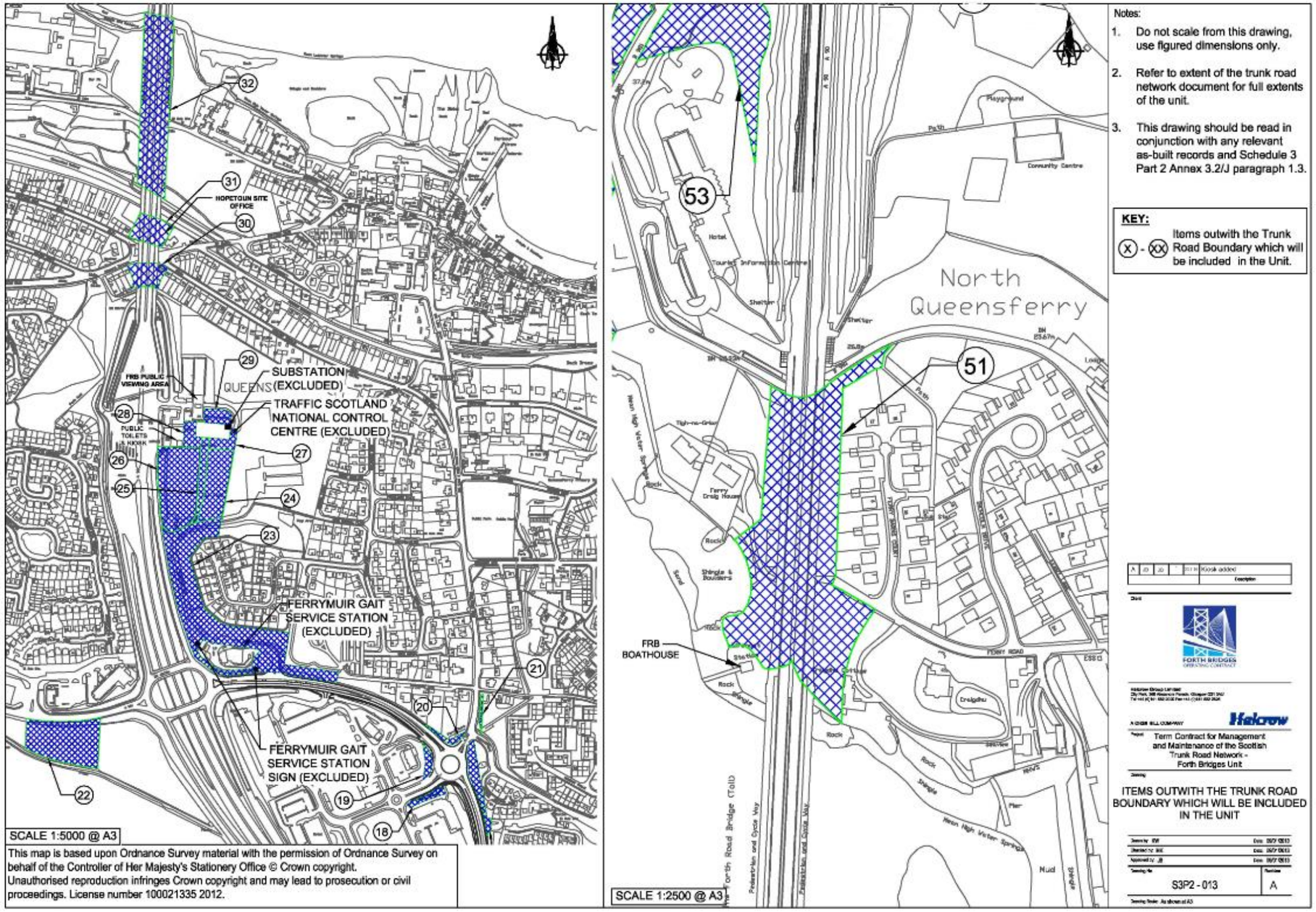

This map is based upon Ordnance Survey material with the permission of Ordnance Survey on behalf of the Controller of Her Majesty's Stationery Office © Crown copyright. Unauthorised reproduction infringes Crown copyright and may lead to prosecution or civil proceedings. License number 100021335 2012.

Notes:

1. Do not scale from this drawing, use figured dimensions only.
2. Refer to extent of the trunk road network document for full extents of the unit.
3. This drawing should be read in conjunction with any relevant as-built records and Schedule 3 Part 2 Annex 3.2/J paragraph 1.3.

KEY:

(X) - (XX) Items outwith the Trunk Road Boundary which will be included in the Unit.

Helcrow

Term Contract for Management and Maintenance of the Scottish Trunk Road Network - Forth Bridges Unit

ITEMS OUTWITH THE TRUNK ROAD BOUNDARY WHICH WILL BE INCLUDED IN THE UNIT

S3P2 - 013 | A

signed for and on behalf of The Scottish Ministers

by ……...Roy Brannen…….

on …..…… December 2014

at ……Glasgow……..…

……..
Authorised Signatory

signed for and on behalf of AMEY LG Limited

by ……

on ….. December 2014

at ……Glasgow……..…

……..
Director/Company Secretary/ Authorised Signatory*

signed for and on behalf of The Scottish Ministers

by ……..Roy Brannen…….

on …..…… December 2014

at ……Glasgow……..…

……

Authorised Signatory

signed for and on behalf of AMEY LG Limited

by ……

on ….. December 2014

at ……Glasgow……..…

……

Director/Company Secretary/ Authorised Signatory*

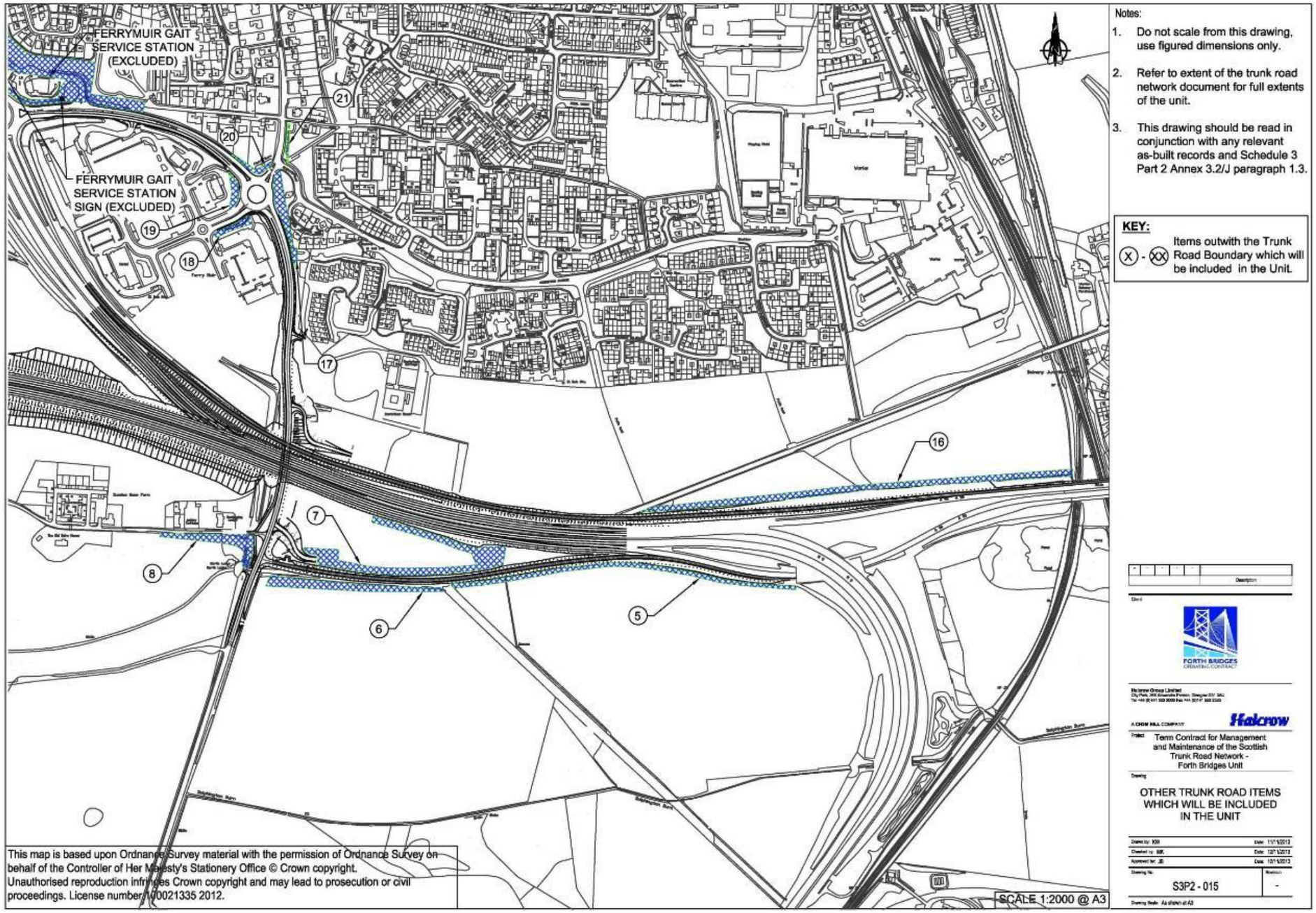

signed for and on behalf of The Scottish Ministers

by ……..Roy Brannen…….

on …..…… December 2014

at ……Glasgow……..…

……

Authorised Signatory

signed for and on behalf of AMEY LG Limited

by ……

on ….. December 2014

at ……Glasgow……..…

……

Director/Company Secretary/ Authorised Signatory*

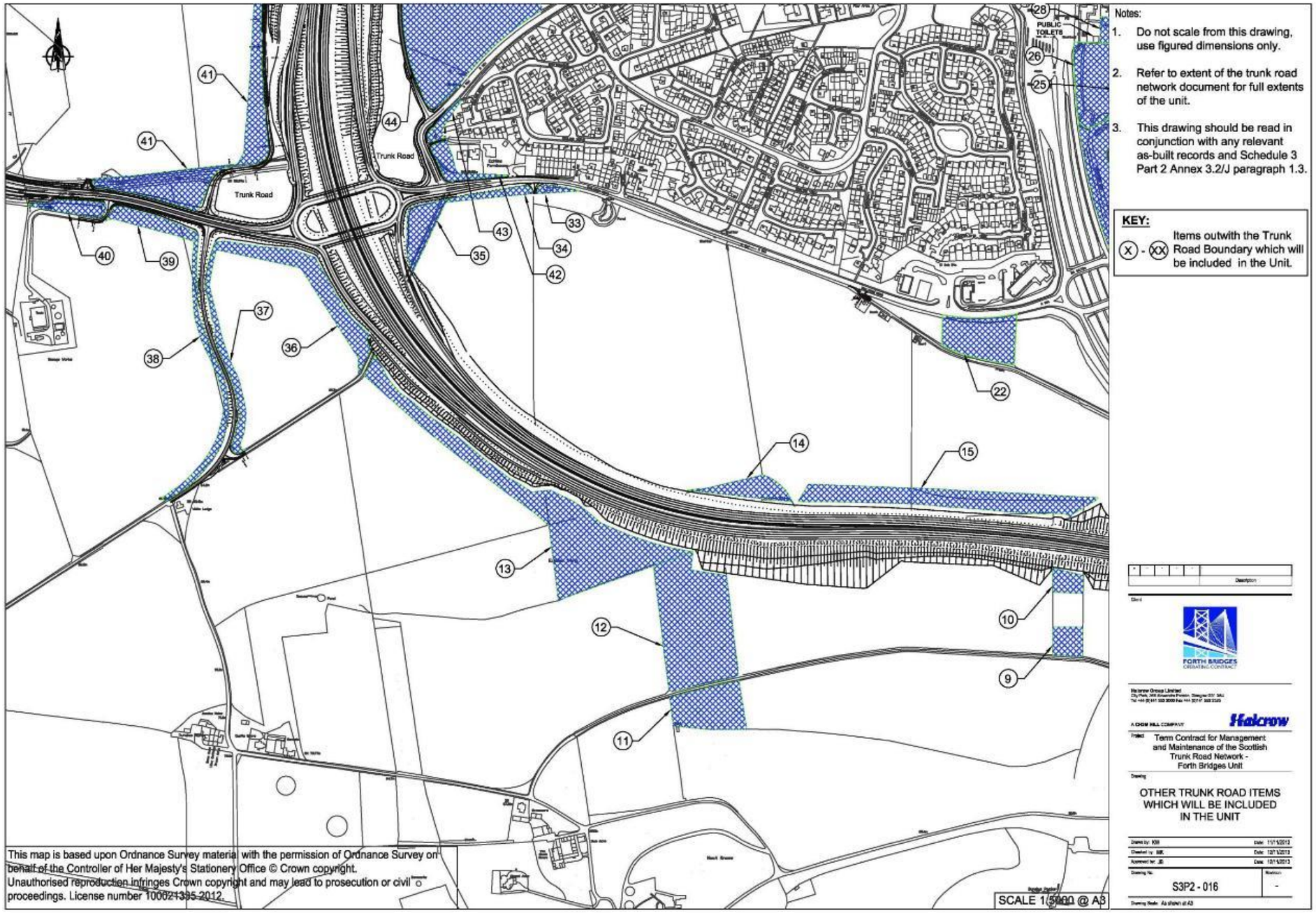

signed for and on behalf of The Scottish Ministers

by ……..Roy Brannen…….

on …..…… December 2014 ……. Authorised Signatory

at ……Glasgow……..…

signed for and on behalf of AMEY LG Limited

by ……

on ….. December 2014 ……..…. Director/Company Secretary/ Authorised Signatory*

at ……Glasgow……..…

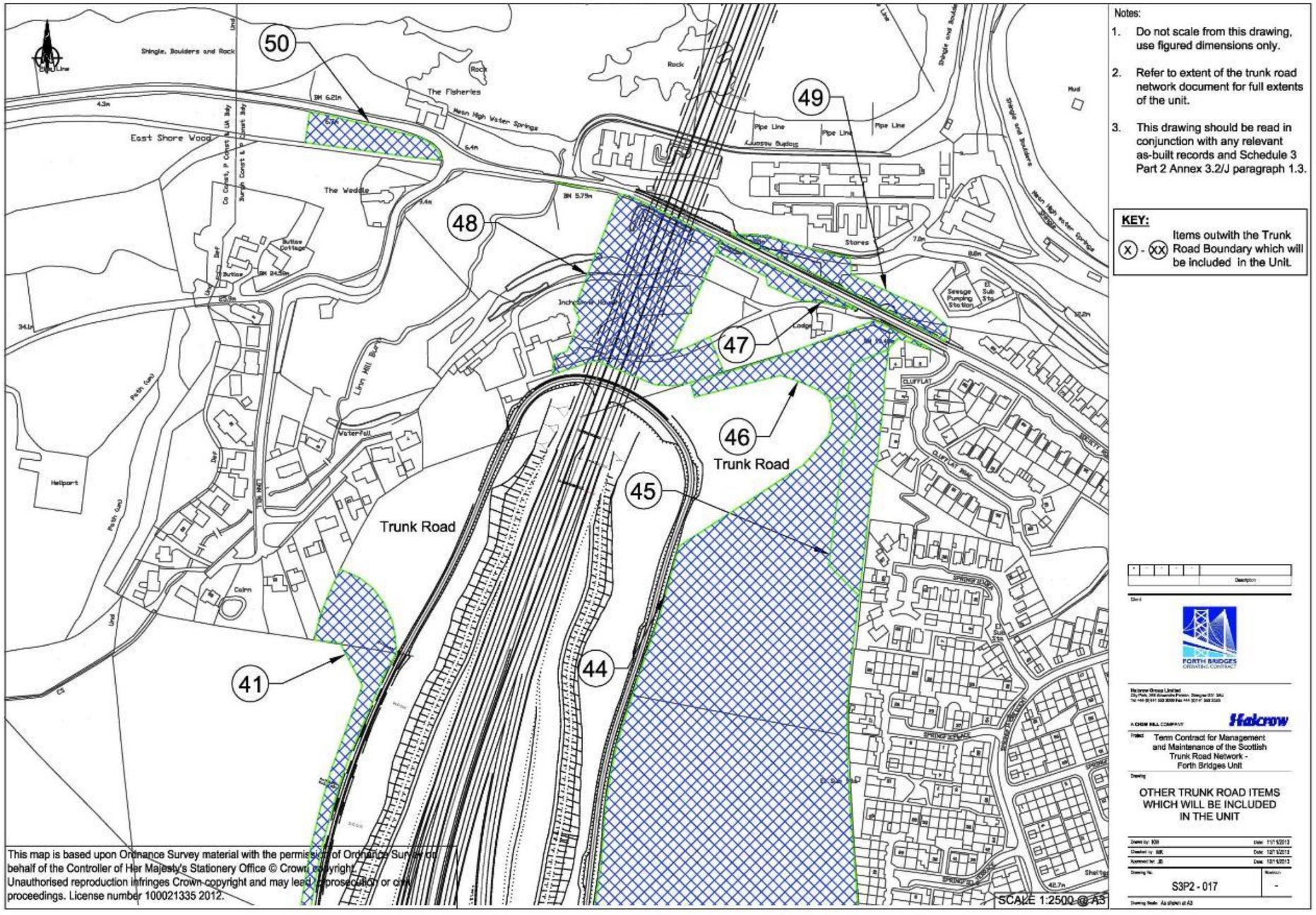

Notes:

1. Do not scale from this drawing, use figured dimensions only.
2. Refer to extent of the trunk road network document for full extents of the unit.
3. This drawing should be read in conjunction with any relevant as-built records and Schedule 3 Part 2 Annex 3.2/J paragraph 1.3.

KEY:

(X) - (XX) Items outwith the Trunk Road Boundary which will be included in the Unit.

FORTH BRIDGES OPERATING CONTRACT

Halcrow Group Limited

A CH2M HILL COMPANY

Halcrow

Project: Term Contract for Management and Maintenance of the Scottish Trunk Road Network - Forth Bridges Unit

Drawing: OTHER TRUNK ROAD ITEMS WHICH WILL BE INCLUDED IN THE UNIT

Drawn by: KW Date: 11/11/2013

Checked by: MK Date: 12/11/2013

Approved by: JD Date: 12/11/2013

Drawing No: S3P2 - 017 Revision: -

Drawing Scale: As shown at A3

signed for and on behalf of The Scottish Ministers

by ……...Roy Brannen…….

on …..…… December 2014

at ……Glasgow……..…

……..
Authorised Signatory

signed for and on behalf of AMEY LG Limited

by ……

on ….. December 2014

at ……Glasgow……..…

……..…
Director/Company Secretary/
Authorised Signatory*

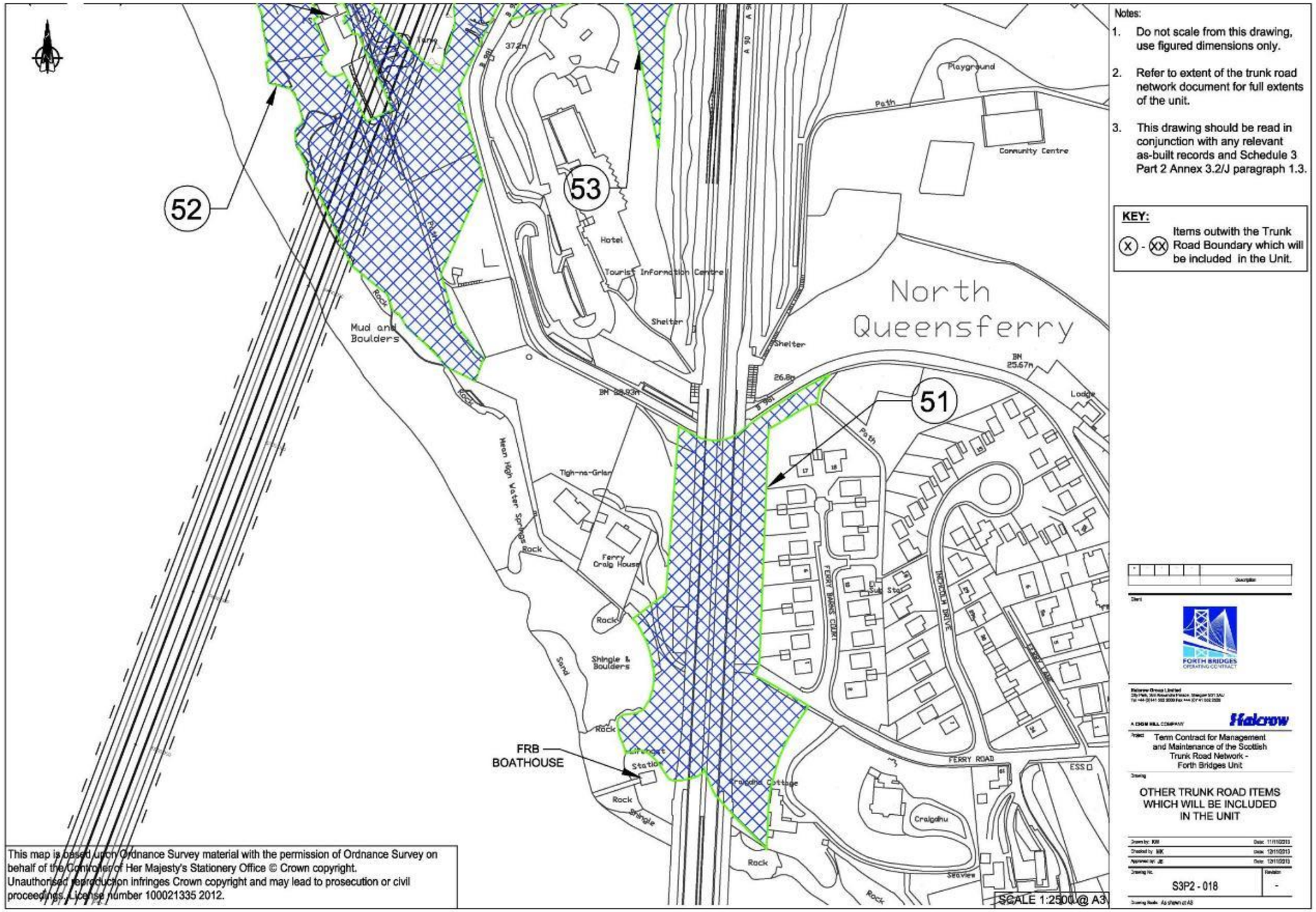

signed for and on behalf of The Scottish Ministers

by ……..Roy Brannen…….

on …..…… December 2014

at ……Glasgow……..…

……

Authorised Signatory

signed for and on behalf of AMEY LG Limited

by ……

on ….. December 2014

at ……Glasgow……..…

……

Director/Company Secretary/ Authorised Signatory*

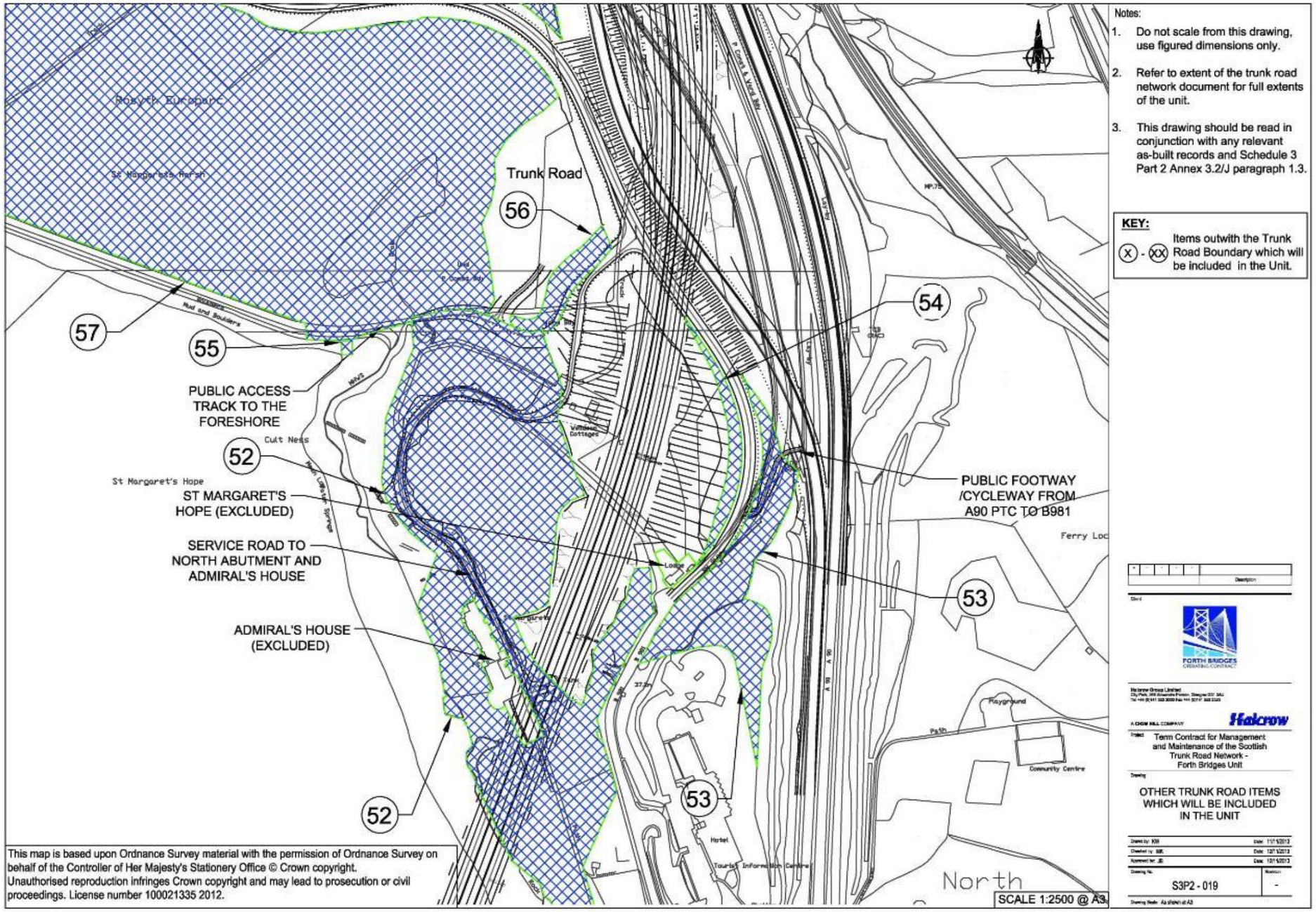

This map is based upon Ordnance Survey material with the permission of Ordnance Survey on behalf of the Controller of Her Majesty's Stationery Office © Crown copyright. Unauthorised reproduction infringes Crown copyright and may lead to prosecution or civil proceedings. License number 100021335 2012.

Notes:

1. Do not scale from this drawing, use figured dimensions only.
2. Refer to extent of the trunk road network document for full extents of the unit.
3. This drawing should be read in conjunction with any relevant as-built records and Schedule 3 Part 2 Annex 3.2/J paragraph 1.3.

KEY:

(X) - (XX) Items outwith the Trunk Road Boundary which will be included in the Unit.

FORTH BRIDGES OPERATING CONTRACT

Halcrow Group Limited

A CH2M HILL COMPANY

Halcrow

Project: Term Contract for Management and Maintenance of the Scottish Trunk Road Network - Forth Bridges Unit

Drawing: OTHER TRUNK ROAD ITEMS WHICH WILL BE INCLUDED IN THE UNIT

Drawn by: KW Date: 11/11/2013

Checked by: BK Date: 12/11/2013

Approved by: JB Date: 12/11/2013

Drawing No. S3P2 - 019 Revision -

Drawing Scale: As shown at A3

signed for and on behalf of The Scottish Ministers

by ……...Roy Brannen…….

on …..…… December 2014

at ……Glasgow……..…

……..

Authorised Signatory

signed for and on behalf of AMEY LG Limited

by ……

on ….. December 2014

at ……Glasgow……..…

……..

Director/Company Secretary/ Authorised Signatory*

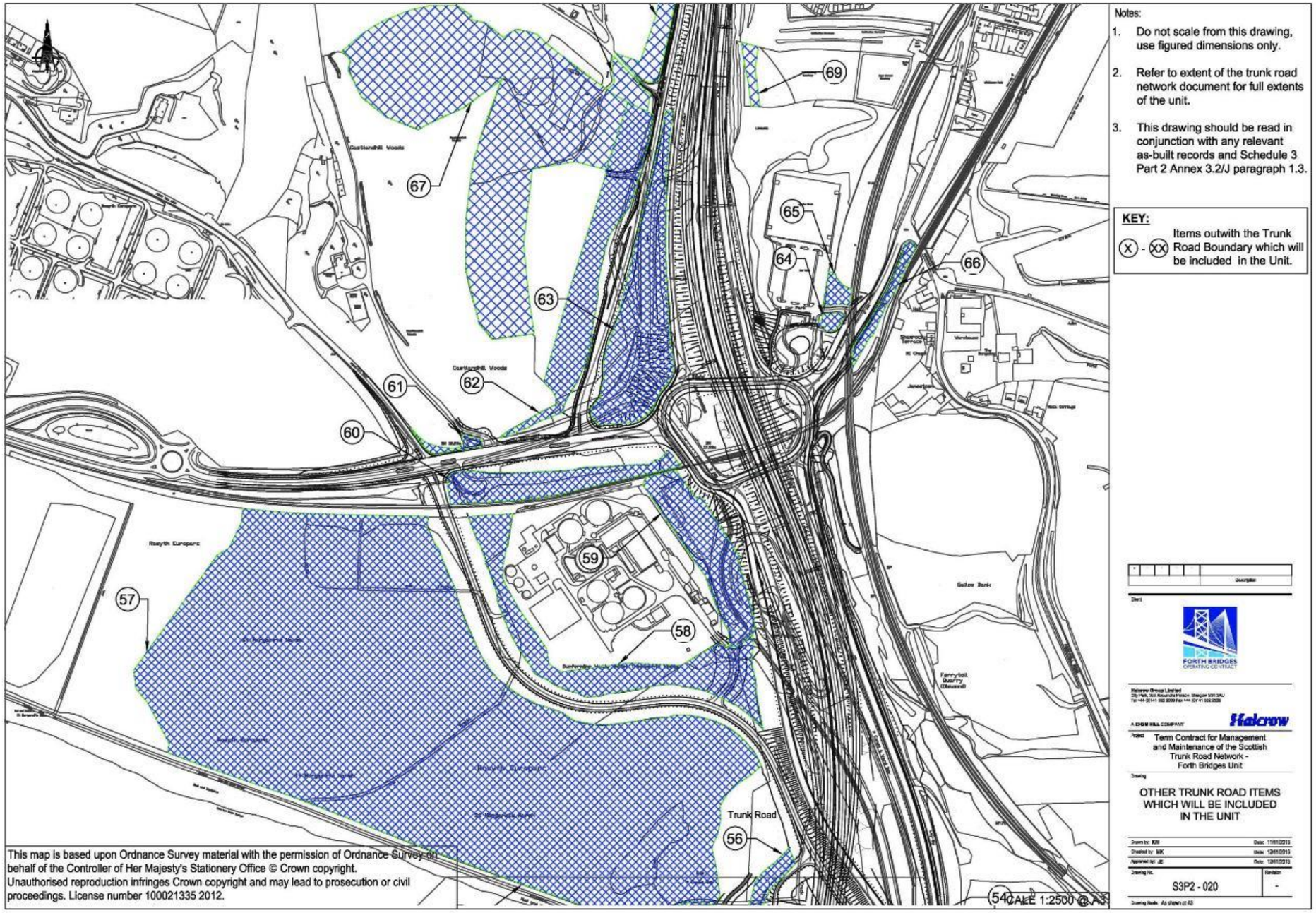

signed for and on behalf of The Scottish Ministers

by ……...Roy Brannen…….

on …..…… December 2014

at ……Glasgow……..…

……..……..
Authorised Signatory

signed for and on behalf of AMEY LG Limited

by ……

on ….. December 2014

at ……Glasgow……..…

……..…
Director/Company Secretary/
Authorised Signatory*

signed for and on behalf of The Scottish Ministers

by ……...Roy Brannen…….

on …..…… December 2014

at ……Glasgow……..…

……..
Authorised Signatory

signed for and on behalf of AMEY LG Limited

by ……

on ….. December 2014

at ……Glasgow……..…

……..
Director/Company Secretary/
Authorised Signatory*

SCOTTISH MINISTERS' REQUIREMENTS

SCHEDULE 3 PART 3

REFERENCE DOCUMENTS

CONTENTS **Page No.**

1.	**REFERENCE DOCUMENTS**	**1**
1.1	List of Documents	1
1.2	Edition of Reference Documents	1
1.3	Provisions within Various Standards in the Design Manual for Roads and Bridges	1
1.4	Transport Scotland Interim Amendments	1

ANNEX 3.3/A – List of Documents referred to in Schedule 1 and the Scottish Ministers' Requirements **3**

SCOTTISH MINISTERS' REQUIREMENTS

SCHEDULE 3 PART 3

REFERENCE DOCUMENTS

1. REFERENCE DOCUMENTS

1.1 List of Documents

1.1.1 The Operating Company shall comply with the reference documents identified in Annex 3.3/A of this Part.

1.2 Edition of Reference Documents

1.2.1 Notwithstanding any date stated in Annex 3.3/A of this Part, for any Ordered Operations the relevant reference documents are deemed to be the editions current on the date of the Order instructing those Ordered Operations.

1.2.2 Notwithstanding any date stated in Annex 3.3/A of this Part, for any Core Operations the relevant reference documents are deemed to be the editions current on the date 30 days prior to the date of execution of those Core Operations.

1.3 Provisions within Various Standards in the Design Manual for Roads and Bridges

1.3.1 Notwithstanding any individual provisions of the various standards within the *Design Manual for Roads and Bridges* regarding implementation and scope, the Operating Company shall comply with all standards constituting parts of the *Design Manual for Roads and Bridges* in respect of all Operations and all Schemes arising in connection with this Contract.

1.4 Transport Scotland Interim Amendments

1.4.1 Transport Scotland Interim Amendments identified in Annex 3.3/A of this Part which amend certain provisions of the *Design Manual for Roads and Bridges* shall have precedence over such provisions unless otherwise ordered by the Director.

This is Annex 3.3/A to Schedule 3 Part 3 referred to in the foregoing Agreement between Scottish Ministers and Amey LG Limited.

SCOTTISH MINISTERS' REQUIREMENTS

SCHEDULE 3 PART 3

REFERENCE DOCUMENTS

ANNEX 3.3/A – List of Documents referred to in Schedule 1 and the Scottish Ministers' Requirements

SCOTTISH MINISTERS' REQUIREMENTS

SCHEDULE 3 PART 3

REFERENCE DOCUMENTS

ANNEX 3.3/A – List of Documents referred to in Schedule 1 and the Scottish Ministers' Requirements

Publisher	Title	Address
Scottish Government	2020 Challenge for Scotland's Biodiversity - A Strategy for the conservation and enhancement of biodiversity in Scotland +	Edinburgh: Scottish Government
Transport Scotland	Addressing Barriers to Accessibility on the Trunk Road Network: Guidance Note for Operating Companies	Glasgow: Transport Scotland, Buchanan House
Transport Scotland	Airwave Operating Protocols and Procedures*	Glasgow: Transport Scotland, Buchanan House
Airwave Accreditation Secretariat	Airwave Service Code of Practice Implementation Brief+	Cabinet Office
ASTM International	American Society for Testing and Materials C856-04 'Standard Practice for Petrographic Examination of Hardened Concrete'	USA: 100 Barr Harbor Drive, West Conshohocken
ELEXON	Balancing and Settlement Code of Practice (BSCP) 520	4th Floor, 350 Euston Road, London NW1 3AW
BRE	Building Research Establishment Information paper IP/6/81 'Carbonation of concrete made with dense natural aggregates'	Watford: BRE, Bucknalls Lane
Scottish Executive	Choose Life – the National Strategy and Action Plan to Prevent Suicide in Scotland' December 2002	Edinburgh, Scottish Government
Scottish Executive	Circular 4/1998 – The Use of Conditions in Planning Permissions	Edinburgh: Scottish Government
Road Surface Treatments Association	Code of Practice for Surface Dressing (RSDA 2004)	Colchester: RSTA, Westwood Park, London Road
Highways Agency	Code of Practice Lighting and Marking for Abnormal Load Self Escorting Vehicles incorporating Operating guidance +	Birmingham: Highways Agency
Scottish Executive Environment Group	Code of Practice on Litter and Refuse	Edinburgh: Scottish Government
The Scottish Office and the County Surveyor's Society in Scotland	Code of Practice 'The Reduction of Traffic Delays at Roadwork's '	Edinburgh: Scottish Government
Transport Scotland	Contract between the Scottish Ministers and Forth Crossing Bridge Constructors	Glasgow: Transport Scotland, Buchanan House

Publisher	Title	Address
Health and Safety Executive	Control of Lead at Work Regulations Approved Code of Practice and guidance #	Merseyside: Redgrave Court, Merton Road, Bootle
Transport Scotland	Corporate Plan 2012- 2015	Glasgow: Transport Scotland, Buchanan House
Transport Scotland	Cycling by Design 2010+	Glasgow: Transport Scotland, Buchanan House
Transport Scotland	Departures from Standard – Advice and Procedures Guide+	Glasgow: Transport Scotland, Buchanan House
Overseeing Organisations of Scotland, Wales, England and Northern Ireland	Design Manual for Roads and Bridges	London: The Stationery Office
Transport Scotland	Development Planning and Management Transport Appraisal Guidance	Glasgow: Transport Scotland, Buchanan House
BSI	Draft for Development (DD) 232: 1996	London: 389 Chiswick High Road
Transport Scotland	Emergency Standard Diversion Routes – Development Procedures for Operating Companies*	Glasgow:Transport Scotland, Buchanan House
Transport Scotland	Employer's Delivery Team Memorandum Operation and Maintenance of the Queensferry Crossing Structural Health Monitoring System.	Glasgow: Transport Scotland, Buchanan House
Energy Networks Association	Engineering Recommendation G39/1 `Model Code of Practice covering Electrical Safety in the Planning, Installation, Commissioning and Maintenance of Public Lighting and Other Street Furniture	London: 52 Horseferry Road
Transport Scotland	Extent of the Trunk Road Network	Glasgow: Transport Scotland, Buchanan House
Transport Scotland	Fitting Landscapes: Securing More Sustainable Landscapes	Glasgow: Transport Scotland, Buchanan House
FETA	Forth Road Bridge Engineering Manual	West Lothian: Forth Road Bridge, Administration Office, South Queensferry, EH30 9SF
Highways Agency	Functional specification for the optical performance of discontinuous variable message signs TR2516B*	London: The Stationery Office
Scottish Road Works Commissioner	Good Practice Guidance under Section 17(4) (B) of the Transport (Scotland) Act 2005	Edinburgh: Saughton House, Broomhouse Drive
Communications-Electronic Security Group (CEGS)	Good Practice Guide No 6 – Outsourcing and Offshoring: Managing the Security Risks	Cheltenham, Gloucestershire
Findlay Irvine Ltd	Grip Tester Automatic Watering System Operations Manual Issue 2	Penicuik, Edinburgh
Findlay Irvine Ltd	Grip Tester MK2 D-Type Maintenance Manual	Penicuik, Edinburgh
Transport Scotland	Guidance Document for Implementing a Skid Resistance Policy for Transport Scotland	Glasgow: Transport Scotland, Buchanan House
The Institution of Engineering and Technology	Guidance Note 3: Inspection & Testing (Guidance Notes for BS7671)	Stevenage: Michael Faraday House

Publisher	Title	Address
NHS Health Scotland	Guidance on action to reduce suicides at locations of concern 2012	Glasgow: Meridian Court, Cadogan Street
TRL	Guidance on the use in Scotland of Five Alternative De-icers to Salt Suitable for use in Lower Temperatures	Wokingham: Crowthorne House, Nine Mile Ride
Energy Networks Association	Handbook for the Highway Electrical Registration Scheme	Ferring: Little Hampton Road, West Sussex
Transport Scotland	High Wind Strategy and National Wind Management Guidelines	Glasgow: Transport Scotland, Buchanan House
Highways Agency	Highways Agency Interim Advice Note 139/11- Managed Motorways safety Risk Working Instructions	London: The Stationery Office
Highways Agency	Highways Agency Interim Advice Note 151/11- Safety Risk Management Guidance for Network delivery and Development Directorate	London: The Stationery Office
Highways Agency	Highways Agency Network Management Manual	London: The Stationery Office
Highways Agency	Highways Term Maintenance Price Adjustment Formulae Indices – 2010 Series	London: The Stationery Office
Communications-Electronic Security Group (CEGS)	HMG IA Standard No 1 Technical Risk Assessment	Cheltenham, Gloucestershire
Transport Scotland	Inspections Further Data Collection Requirements	Glasgow: Transport Scotland, Buchanan House
BBA/HAPAS	Interim Guideline Document for the Assessment and Certification of Thin Surfacing Systems for Highways*	Bucknalls Lane, Garston, Watford, Herts
Scottish Executive	Inventory of Wildlife Mitigation Measures on Trunk Roads and Motorways*	Edinburgh: Scottish Government
Transport Scotland	LDS8001_Roadside Electrical Apparatus and Lighting Identification System.#	Glasgow: Transport Scotland, Buchanan House
Transport Scotland	LDS8002_Roadside Electrical Apparatus and Lighting Inventory Requirements.+	Glasgow: Transport Scotland, Buchanan House
Transport Scotland	LDS8004_Roadside Electrical Apparatus and Lighting Health and Safety File Requirements.#	Glasgow: Transport Scotland, Buchanan House
Transport Scotland	LDS8005_Electrical Inspection and Testing of Lighting and Associated Electrical Apparatus & Installations with Model Forms.#	Glasgow: Transport Scotland, Buchanan House
Transport Scotland	LDS8006_Electrical Supply to Roadside Electrical Apparatus and Lighting Sites.#	Glasgow: Transport Scotland, Buchanan House
Transport Scotland	LDS8007_Roadside Electrical Apparatus and Lighting Recommended Reference Documents Listing.#	Glasgow: Transport Scotland, Buchanan House
Transport Scotland	LDS8012_ Guidance Note on Unmetered Supplies for Transport Scotland Equipment. #	Glasgow: Transport Scotland, Buchanan House
Transport Scotland	LDS8013_ Guidance on decommissioning and removal of obsolete, redundant and derelict Roadside Electrical Assets and Lighting. #	Glasgow: Transport Scotland, Buchanan House

Publisher	Title	Address
Transport Scotland	LDS8014_ Competency Requirements Relating to Work on Transport Scotland's Roadside Electrical Assets and Lighting.#	Glasgow: Transport Scotland, Buchanan House
Transport Scotland	LDS8016_Scottish MCHW Series 1200 1300 & 1400 and Sample Appendices.#	Glasgow: Transport Scotland, Buchanan House
Transport Scotland	LDS8017_ Special Requirements for Local Authority Roadside Electrical Assets and Lighting.#	Glasgow: Transport Scotland, Buchanan House
Transport Scotland	LDS8018_ Guidance on Sustainability in Relation to Roadside Electrical Assets and Lighting.#	Glasgow: Transport Scotland, Buchanan House
Transport Scotland	LDS8020_Guidance on the preparation of Statements of Intent relating to proposed works on Roadside Electrical Assets and Lighting.#	Glasgow: Transport Scotland, Buchanan House
Transport Scotland	LDS8021_Festive Decorations on the Scottish Trunk Road Network.#	Glasgow: Transport Scotland, Buchanan House
Transport Scotland	LDS8022_ Guidance on the Definition of Electrical Maintenance Responsibilities and Boundaries in Relation to Roadside Electrical Assets and Lighting. # *	Glasgow: Transport Scotland, Buchanan House
Transport Scotland	LDS8023_Electrical Maintenance Guidelines for Roadside Electrical Apparatus Lighting and Power Supplies.#	Glasgow: Transport Scotland, Buchanan House
Transport Scotland	LDS8024_Weather Station (Road Sensor) Equipment on Scottish Trunk Roads.#	Glasgow: Transport Scotland, Buchanan House
Transport Scotland	LDS8025_Typical Drawings relating to Roadside Electrical Assets and Lighting.#	Glasgow: Transport Scotland, Buchanan House
The Scottish Office	Local Transport Note 1/98	Edinburgh: Scottish Government
Transport Scotland	Maintenance and Making Better Use – Value Management of the Structures Renewal Programme – Amended for Transport Scotland	Glasgow: Transport Scotland, Buchanan House
Transport Scotland	Management of Highway Structures: A Code of Practice	London: The Stationery Office
Transport Scotland	Manual for the Management of the Risk of Unplanned Network Disruption	Glasgow: Transport Scotland, Buchanan House
Overseeing Organisations of Scotland, Wales, England and Northern Ireland	Manual of Contract Documents for Highway Works	London: The Stationery Office
Water Research Council	Manual of Sewer Condition Classification – 5th Edition#	Swindon: Frankland Road, Blagrove
Scottish Executive	Method of Installation of Node Markers*	Edinburgh: Scottish Government
Transportation Research Board	National Cooperative Highway Research Program Report 543 – 'Effective Slab Width for Composite Steel Bridge Members	Washington, United States of America
Scottish Environmental Protection Agency	Pollution Prevention Guideline 22	Stirling: Erskine Court, Castle Business Park

Publisher	Title	Address
Department for Transport	Prevention of Strikes on Bridges over Highways – A Protocol for Highway and Road Managers and Bridge Owners	London: The Stationery Office
RSPCA	Problems with Badgers	West Sussex: RSPCA
Forth Crossing Bridge Contractors	Queensferry Crossing Inspection and Maintenance Manual	Rosyth: Forth Replacement Crossing Project Office, King Malcolm Drive, KY11 2DY
Scottish Government	Refreshing the National Strategy and Action Plan to prevent Suicide in Scotland *	Edinburgh, Scottish Government
Transport Scotland	Register of Programmed Special Inspections for the Forth Road Bridge	Glasgow: Transport Scotland, Buchanan House
Transport Roads and Research Laboratory	Report LR 362 "Snow Fences"	London: The Stationery Office
Department for Transport	Response to a Bridge Strike over the Railway – A Protocol for Highway and Road Managers and Bridge Owners	London: The Stationery Office
Transport Scotland	Road Asset Management Plan*	Glasgow: Transport Scotland, Buchanan House
Findlay Irvine Ltd	Roadbase Grip Tester Survey Software for Roads User Manual	Penicuik, Edinburgh
Transport Scotland	Roads for All: Good Practice Guide for Roads	Glasgow: Transport Scotland, Buchanan House
Scottish Executive	Scotland's Biodiversity: It's in Your Hands - A strategy for the conservation and enhancement of biodiversity in Scotland +	Edinburgh: Scottish Government
Civil Engineering Contractors Association	Schedule of Dayworks Carried Out Incidental to Contract Work	London, 1 Birdcage Walk, SW1H 9JJ
Scottish Government	Scotland's Road Safety Framework to 2020	Edinburgh: Scottish Government
Scottish Government Executive	Scotland's Transport Future (2004)	Edinburgh: Scottish Government
Scottish Procurement Directorate	Scottish Public Sector Procurement and Freedom of Information Guidance *	Edinburgh: Scottish Government
Transport Scotland	Scottish Road Network Landslides Study Report	Glasgow: Transport Scotland, Buchanan House
Scottish Executive	SEIA 18 Saturation Ageing Tensile Stiffness Test*	Edinburgh: Scottish Executive Victoria Quay
Transport Scotland	Signposting of Truckstop Facilities from Motorways and Other Trunk Roads – Policy and Guidance	Glasgow: Transport Scotland, Buchanan House
Overseeing Organisations of Scotland, Wales, England and Northern Ireland	Specification for Highway Works	London: The Stationery Office
Highways Agency	Specification for Highway Works MCH1540 specification for the Installation of Detector Loops	London: The Stationery Office
Highways Agency	Specification for Traffic Signal Controller TR2500	London: The Stationery Office

Publisher	Title	Address
Steel Construction Institute	Steel Bridge Group: Model Project Specification (SCI Publication P382:2009	Ascot, UK
Transport Scotland	Strategic Road Safety Plan 2007	Glasgow: Transport Scotland, Buchanan House
Transport Scotland	Structures Management System user manual	Glasgow: Transport Scotland, Buchanan House
The Institution of Lighting Professionals	Technical Report No. 7 High Masts for Lighting and CCTV (2000 Edition)	Rugby: Regent House, Regent Place
Scottish Natural Heritage	The Code of Practice for Deer Management	Leachkin Road, Inverness IV3 8NW
Transport Scotland	The Inspection Manual for Highways Structures Volume 1	London: The Stationery Office
The Institution of Structural Engineers	The Operation and Maintenance of Bridge Access Gantries and Runways. (Second Edition 2007)	London: 11 Upper Belgrave Street
Department for Transport	TR2020C National Ice Prediction Network*	London: The Stationery Office
Highways Agency	TR2502A Specification for Portable Traffic Signal Control Equipment for use at Roadworks	London: The Stationery Office
Highways Agency	TR2504A Specification for Vehicle Detection Equipment for Vehicle Actuated Portable Traffic Signals	London: The Stationary Office
Concrete Society	TR30 Alkali-silica reaction - minimising the risk of damage to concrete (CS TR 30)	Camberley, Surrey: 4 Meadows Business Park
Department for Transport	Traffic Advisory Leaflet 04/11, Temporary Traffic Signs for Special Events October 2011	London: The Stationery Office
Department for Transport	Traffic Advisory Leaflet 1/03, Vehicle Activated Signs	London: The Stationery Office
Transport Scotland	Traffic Scotland Special Requirements*	Glasgow: Transport Scotland, Buchanan House
Department for Transport	Traffic Signs Manual *	London: The Stationery Office
Department for Transport	Traffic Signs Regulations and General Directions#	London, The Stationery Office
TRL	Transport and Road Research Laboratory Overseas Road Note 8 – A Users Manual for a Program to Analyse Dynamic Cone Penetrometer Data	Wokingham: Crowthorne House, Nine Mile Ride
Transport Scotland	Transport Scotland Identity Guidelines	Glasgow: Transport Scotland, Buchanan House
Transport Scotland	Transport Scotland Inspection Manual – Principal Inspections of Trunk Road Structures and Location System	Glasgow: Transport Scotland, Buchanan House
Transport Scotland	Transport Scotland Trunk Road Condition Manual	Glasgow: Transport Scotland, Buchanan House
Transport Scotland	Transport Scotland Trunk Road Inventory Manual	Glasgow: Transport Scotland, Buchanan House
Transport Scotland	Transport Scotland Trunk Roads Inspection Manual	Glasgow: Transport Scotland, Buchanan House
Transport Scotland	Transport Scotland's Annual Process for Roads Structural Maintenance	Glasgow: Transport Scotland, Buchanan House
UK Roads Board	Treatments for Extreme Cold	www.NWSRG.org

Publisher	Title	Address
TRL	TRL Road Note 39 (6th Edition)	Wokingham: Crowthorne House, Nine Mile Ride
Concrete Bridge Development Group	TRRL Technical report 'Guide to Testing and Monitoring the durability of Concrete Structures' (by the Concrete Bridge Development Group – 2002	Camberley, Surrey: 4 Meadows Business Park
Transport Scotland	Trunk Road and Motorway Tourist Signposting Guidance – For tourist attractions and tourist facilities March 2016 +	Glasgow: Transport Scotland, Buchanan House
Transport Scotland	Trunk Road and Motorway Tourist Signposting Policy and Guidance	Glasgow: Transport Scotland, Buchanan House
Scottish Executive	Trunk Road Network Management Division Node Marker Installation Guidance Positioning at Standard Locations*	Edinburgh: Scottish Government
Transport Scotland	TSIA 20 Concrete Half-Joint Deck Structures+	Glasgow: Transport Scotland, Buchanan House
Transport Scotland	TSIA 21 Principal and General Inspection of Sign/Signal, and Gantries with Low Handrails or Open Mesh Flooring+	Glasgow: Transport Scotland, Buchanan House
Transport Scotland	TSIA 22 Implementation of New Reinforcement Standards*	Glasgow: Transport Scotland, Buchanan House
Transport Scotland	TSIA 23 Rev3 – Implementation of BS8500 – 1:2006 Concrete – complimentary British Standard to BS EN206 – 1+	Glasgow: Transport Scotland, Buchanan House
Transport Scotland	TSIA 24 Guidance on Implementing Results of Research on Bridge Deck Waterproofing*	Glasgow: Transport Scotland, Buchanan House
Transport Scotland	TSIA 25 Assessment and Upgrading of Existing Vehicle Parapets*	Glasgow: Transport Scotland, Buchanan House
Transport Scotland	TSIA 26 The Anchorage of Reinforcement and Fixings in Hardened Concrete*	Glasgow: Transport Scotland, Buchanan House
Transport Scotland	TSIA 27 Rev 01 Implementation of Construction (Design and Management) Regulations 2007 *	Glasgow: Transport Scotland, Buchanan House
Transport Scotland	TSIA 28 Rev 2 Certification of Combined Kerb and Drainage Products*	Glasgow: Transport Scotland, Buchanan House
Transport Scotland	TSIA 29 Identification of Particularly at Risk Supports*	Glasgow: Transport Scotland, Buchanan House
Transport Scotland	TSIA 30 The Use of Foamed Concrete*	Glasgow: Transport Scotland, Buchanan House
Transport Scotland	TSIA 32 The Deflection of Permanent Formwork*	Glasgow: Transport Scotland, Buchanan House
Transport Scotland	TSIA 33 General and Principal Inspections for Trunk Road Structures*	Glasgow: Transport Scotland, Buchanan House
Transport Scotland	TSIA 34 Use of HFS on Low Speed Approaches to Signalised Crossings and Junctions on Trunk Road*	Glasgow: Transport Scotland, Buchanan House
Transport Scotland	TSIA 35/15 TS2010 Surface Course Specification and Guidance *	Glasgow: Transport Scotland, Buchanan House
Transport Scotland	TSIA 36 Structural Safety Reporting*	Glasgow: Transport Scotland, Buchanan House

Publisher	Title	Address
Transport Scotland	TSIA 37 Design of Wide Single 2 plus 1 Roads*	Glasgow: Transport Scotland, Buchanan House
Transport Scotland	TSIA 38 Temporary Barrier Decision Tool*	Glasgow: Transport Scotland, Buchanan House
Transport Scotland	TSIA 39 Use of Eurocodes for the design of bridges and road related structures	Glasgow: Transport Scotland, Buchanan House
Transport Scotland	TSIA 40 Road Safety Audit Certification Compliance with EC Directive 2008 96 EC*	Glasgow: Transport Scotland, Buchanan House
Transport Scotland	TSIA 42 Temporary Cover Plates Over Bridge Expansion Joints+	Glasgow: Transport Scotland, Buchanan House
Transport Scotland	TSIA 43 Strategy for the Repair/Replacement of Joints+	Glasgow: Transport Scotland, Buchanan House
Transport Scotland	TSIA 44 Introduction of Simplified Design Method for Crack and Seat Overlay (CSO)+	Glasgow: Transport Scotland, Buchanan House
Transport Scotland	TSIA 45 Rev1 Management of Abnormal Indivisible Loads+	Glasgow: Transport Scotland, Buchanan House
Transport Scotland	TSIA 46/16 - Structures Inspector Competencies and Certification+	Glasgow: Transport Scotland, Buchanan House
Transport Scotland	TSIA 47/16 - Adoption of IAN 154/12+	Glasgow: Transport Scotland, Buchanan House
Transport Scotland	Use of Mobile Variable Message Signs on the Trunk Road Network – Guidance Note No 1	Glasgow: Transport Scotland, Buchanan House
Scottish Executive Development Department	Value for Money Manual	Edinburgh: Scottish Government

SCOTTISH MINISTERS' REQUIREMENTS

SCHEDULE 3 PART 4

OTHER CONTRACTS WITHIN THE UNIT

CONTENTS **Page No.**

1.	**WORKS IN PROGRESS**	**1**
1.1	Contracts in Progress on the Unit	1
1.2	Developers' Schemes	1
2.	**REQUIREMENTS**	**1**
2.1	Contract Administrator for Works Contracts in Progress	1
2.2	Other Contracts	2
ANNEX 3.4/A – Details of Existing and Proposed Contracts		**5**
ANNEX 3.4/B – Local Requirements in Relation to Transfer or Suspension of Operating Company Responsibilities		**9**

SCOTTISH MINISTERS' REQUIREMENTS

SCHEDULE 3 PART 4

OTHER CONTRACTS WITHIN THE UNIT

1. WORKS IN PROGRESS

1.1 Contracts in Progress on the Unit

1.1.1 Other road or bridge construction or maintenance contracts for which the Scottish Ministers are the employer may be in progress on the Unit at Commencement of Service Date 1. They will be either:

(i) Works Contracts where the previous operating company or FETA was acting as Contract Administrator, or

(ii) Other Contracts.

1.1.2 The Forth Replacement Crossing contracts which are the Forth Replacement Crossing Principal Contract, the Fife Intelligent Transport System Contract and the M9 Junction 1a Contract will be in progress at Commencement of Service Date 1 and these are Other Contracts.

1.1.3 Other Contracts may commence during the term of this Contract.

1.2 Developers' Schemes

1.2.1 Improvement work in connection with development projects, led or funded by developers or others, may be in progress on the Unit at Commencement of Service Date 1 or may commence during the term of this Contract.

1.2.2 Subject to an Order, the Operating Company shall assist the Director with other matters relating to developers' schemes.

2. REQUIREMENTS

2.1 Contract Administrator for Works Contracts in Progress

2.1.1 Table 1.A in Annex 3.4/A of this Part lists Works Contracts under preparation or in progress at Commencement of Service Date 1.

2.1.2 The Director will provide an updated Table 1.A in Annex 3.4/A of this Part during Mobilisation Period 1.

2.1.3 For Works Contracts where the previous operating company or FETA was acting as Contract Administrator, the Director will issue an Order requiring the Operating Company to take over the role and responsibilities of the Contract Administrator with effect from Commencement of Service Date 1. These Works Contracts shall include those where Works have been substantially completed but either the defects correction or maintenance period has not expired or where there is a service period extending beyond the defects correction or maintenance period.

2.1.4 The Director will forward all relevant documentation received by the Director from the previous operating company or FETA in relation to these Works Contracts. Within 30 days of receipt of the documentation the Operating Company shall review such

documentation, identify documentation which it considers is incomplete or missing and provide proposals for rectification where practical for consent of the Director.

2.1.5 The Operating Company shall undertake all outstanding obligations of the Contract Administrator for these continuing Works Contracts, as detailed in Schedule 6 Part 1.

2.1.6 For Works Contracts where the Operating Company takes over the role and responsibilities of the Contract Administrator, the Operating Company shall also assume the roles required by the CDM Regulations that were undertaken by the previous operating company or the role assigned to the Operating Company in Schedule 6 Part 2 where FETA was the client.

2.2 Other Contracts

2.2.1 The Director will provide the details and starting dates of Other Contracts to the Operating Company:

(i) in Table 1.B in Annex 3.4/A of this Part for contracts known to be in progress at Commencement of Service Date 1,

(ii) during Mobilisation Period 1 for all Other Contracts that are then in progress, and

(iii) no later than two weeks after appointment of a contractor for all Other Contracts that commence after Commencement of Service Date 1.

2.2.2 For any Other Contract, subject to an Order the Director may require the Operating Company to transfer or suspend Operating Company related responsibilities during the construction phase or the maintenance period. In particular, the Director may, unless the cause of a Defect is fair wear and tear or Incident, within that Order instruct the Operating Company to suspend the carrying out of Defects Correction Operations under Clause 5.8.1 of Schedule 1 within the length of road notified, other than making safe and executing temporary repair of Category 1 Defects, for the advised duration.

2.2.3 The Operating Company shall provide access and allow the relevant contractors for Other Contracts to undertake all their obligations excluding the repair of any Defect. Subject to an Order, the Operating Company shall provide access and allow the relevant contractors for Other Contracts to undertake the repair of any Defect.

2.2.4 The Operating Company shall not undertake the maintenance of any component which would impact on any warranty or licence agreement of the component in Other Contracts unless instructed by the Director.

2.2.5 Annex 3.4/B of this Part contains local requirements in relation to transfer and suspension of Operating Company responsibilities on the Unit with which the Operating Company shall comply and that shall be subject to an Order.

2.2.6 Upon completion of the construction phase or maintenance period of an Other Contract, the Director will issue an Order requiring the Operating Company to recommence all Operations that have may have been transferred or suspended.

2.2.7 Upon completion of the construction phase of an Other Contract, the Director will provide the Operating Company with the health and safety file for that Other Contract prior to the Works becoming part of the Operating Company's obligations under this Contract.

2.2.8 Subject to an Order, the Operating Company shall assist the Director with other matters relating to Other Contracts.

This is Annex 3.4/A to Schedule 3 Part 4 referred to in the foregoing Agreement between Scottish Ministers and Amey LG Limited.

SCOTTISH MINISTERS' REQUIREMENTS

SCHEDULE 3 PART 4

OTHER CONTRACTS WITHIN THE UNIT

ANNEX 3.4/A – Details of Existing and Proposed Contracts

SCOTTISH MINISTERS' REQUIREMENTS

SCHEDULE 3 PART 4

OTHER CONTRACTS WITHIN THE UNIT

ANNEX 3.4/A – Details of Existing and Proposed Contracts

Table 1.A – Works Contracts

Contract	Commenced	Status at April 2014
Main Cable Internal Inspection 3		Construction completed and defects notification period continues until October 2015
Acoustic Monitoring Upgrade	April 2014	Site work to commence June 2014. Five year maintenance and reporting period, including one year defect notification period, following completion of construction.
Improvements to Suspended Span Underdeck Access	April 2014	Site work to commence June 2014.
Pier Protection Painting		Contract being prepared for award by FETA
Suspended span gantry upgrade		Contract being prepared for award by FETA
Viaduct Painting		Contract being prepared
Deck Expansion Joint Replacement		Contract being prepared

Table 1.B – Other Contracts

Contract	Commenced	Status at April 2014
Forth Replacement Crossing – Principal Contract	Jun 2011	Programmed completion date 2016 followed by five years defects notification period
Forth Replacement Crossing – Fife Intelligent Transport System Contract	Jun 2011	Construction completed and defects notification period continues until December 2017
Forth Replacement Crossing – M9 Junction 1a Contract	Jul 2011	Construction completed and defects notification period continues until April 2018
M9 Spur Extension / A90 Upgrading	2005	Construction completed and defects notification period continues

This is Annex 3.4/B to Schedule 3 Part 4 referred to in the foregoing Agreement between Scottish Ministers and Amey LG Limited.

SCOTTISH MINISTERS' REQUIREMENTS

SCHEDULE 3 PART 4

OTHER CONTRACTS WITHIN THE UNIT

ANNEX 3.4/B – Local Requirements in Relation to Transfer or Suspension of Operating Company Responsibilities

SCOTTISH MINISTERS' REQUIREMENTS

SCHEDULE 3 PART 4

OTHER CONTRACTS WITHIN THE UNIT

ANNEX 3.4/B – Local Requirements in Relation to Transfer or Suspension of Operating Company Responsibilities

Ferrytoll Junction

The Director will issue an Order to suspend stated Operating Company responsibilities for parts of the Unit including Ferrytoll Junction and stated sections of the A90 at Commencement of Service Date 1 or a stated later date.

Scotstoun Junction to Echline Junction

The Director will issue an Order to suspend stated Operating Company responsibilities for parts of the Unit including stated sections of the A90 between Scotstoun Junction and Echline Junction at Commencement of Service Date 1 or a stated later date.

SCOTTISH MINISTERS' REQUIREMENTS

SCHEDULE 3 PART 5

COMMUNICATIONS STRATEGY, CORRESPONDENCE, ENQUIRIES AND COMPLAINTS

CONTENTS **Page No.**

1.	**COMMUNICATIONS STRATEGY**	**1**
1.1	Introduction	1
1.2	Communications Planning	1
1.3	Media Relations	2
1.4	Website and Digital Communications	3
2.	**CORRESPONDENCE, ENQUIRIES AND COMPLAINTS**	**3**
2.1	General	3
2.2	Ministerial and Transport Scotland Correspondence	3
2.3	Parliamentary Questions	4
2.4	Direct Responses from the Operating Company	4
2.5	The Environmental Information (Scotland) Regulations 2004 and Freedom of Information (Scotland) Act 2002 Requests	5
2.6	The Equality Act 2010	5
2.7	Media Enquiries	5
2.8	Communications Register	6
2.9	Monthly and Annual Summaries to be Maintained	6

ANNEX 3.5/A – Media Enquiries and Procedure **9**

ANNEX 3.5/B – Media Enquiries Form **13**

SCOTTISH MINISTERS' REQUIREMENTS

SCHEDULE 3 PART 5

COMMUNICATIONS STRATEGY, CORRESPONDENCE, ENQUIRIES AND COMPLAINTS

1. COMMUNICATIONS STRATEGY

1.1 Introduction

1.1.1 Working in conjunction with the Director, the Operating Company shall develop a comprehensive communications strategy in the form of an annual Unit-specific communications plan for publicising and promoting to customers and stakeholders its role in delivery of services under this Contract.

1.1.2 During Mobilisation Period 1, as part of developing its communication strategy and annual Unit-specific communications plan, the Operating Company shall be required to:

(i) gain an understanding of the Scottish Government's and Press Transport Scotland's communications policies in respect of the Unit,

(ii) familiarise itself with the communication procedures of the Scottish Government and Press Transport Scotland, and

(iii) develop procedures which ensure consistency between communications released by the Scottish Government and Press Transport Scotland and those which are issued by the Operating Company.

1.2 Communications Planning

1.2.1 FETA has built a solid foundation in terms of a communications strategy, involving the local and wider community.

1.2.2 No later than 25 Working Days prior to Commencement of Service Date 1, the Operating Company working in conjunction with the Director shall develop and submit for the Director's consent a Unit-specific communications plan for the first Annual Period. In developing the plan, the Operating Company shall ensure that its proposals for the release of information take account of, and at least match, the levels set, in connection with FCBC, (such levels being as advised to the Operating Company by the Director) and the historic levels of information and commitments of FETA unless a suitable justification for a reduction in such levels is proposed by the Operating Company and consented to by the Director.

1.2.3 The Operating Company shall identify key groups of customers and stakeholders with whom it needs to communicate. These groups shall include as a minimum Transport Scotland, the Forth Bridges Forum, local, regional and national media, Operational Partners, neighbouring community councils, local councils and Members of the Scottish Parliament. This Unit-specific communications plan shall, as a minimum, include proposals for:

(i) proactive management of a wide range of both incoming and outgoing communications including dealing with positive and adverse publicity and disseminating information efficiently and effectively,

(ii) managing proactive and reactive media opportunities, including those relating to sensitive issues that may attract media attention,

(iii) meeting current standards for digital communications, including how these will be resourced to ensure they are updated on a regular, ongoing basis until the Service End Date,

(iv) managing the relationship with the Director and Press Transport Scotland including:

(a) a process for deciding whether publicity should be handled directly by the Operating Company or through Press Transport Scotland,

(b) a process for keeping Press Transport Scotland informed about all relevant issues, and

(c) a process for deciding whether to use Transport Scotland or Operating Company branding on publicity,

(v) providing stakeholders with opportunities to discuss their needs and give feedback on the Operating Company's Unit-specific communications plan,

(vi) responding to customer and stakeholder feedback,

(vii) publicising and promoting its annual Winter Service Plan,

(viii) developing and agreeing appropriate strategies for different levels of communication in relation to Schemes, Operations and Works Contracts according to their importance, complexity and potential impact on the reliability of journey times, and

(ix) regular monitoring and reporting to the Director on the effectiveness of the Unit-specific communications plan, including suggestions for improvements.

1.2.4 No later than 25 Working Days prior to the commencement of the second Annual Period and each subsequent Annual Period, the Operating Company shall review its current Unit-specific communications plan and develop and submit an updated plan to the Director for his consent.

1.2.5 Press Transport Scotland will provide advice to the Operating Company regarding the text for all newsletters and other publicity materials and communications. The Operating Company shall agree the nature and extent of any external advertising with the Director.

1.2.6 The Operating Company shall make available to customers, and issue to, neighbouring community councils, local councils, Members of the Scottish Parliament and other relevant stakeholders, a quarterly e-newsletter. Its proposals for the content of this quarterly e-newsletter and its proposals for actively seeking voluntary signatories for receipt of this information shall be submitted to the Director for his written consent prior to issue of the quarterly e-newsletter and or implementation by the Operating Company of its said proposals.

1.3 Media Relations

1.3.1 The Operating Company shall appoint suitably experienced personnel in accordance with the requirements of Schedule 5 Part 4 to deliver the Media and Communications Manager role and manage the Unit-specific communications plan.

1.3.2 The Media and Communications Manager shall ensure that Press Transport Scotland is given the opportunity to comment on proposed media statements prior to their release in accordance with the media enquiries procedure detailed in Annex 3.5/A of this Part.

1.3.3 The Media and Communications Manager shall provide Press Transport Scotland, and the appropriate Operational Partners, with sufficient information to enable advance notice to be given for all Operations, Schemes, Works Contracts, road closures, diversions and the like which are likely to affect the reliability of journey times. The Media and Communications Manager shall agree in advance the extent of any related publicity or advertising with Press Transport Scotland and the Director.

1.3.4 The Media and Communications Manager shall attend quarterly review meetings, on dates to be notified by the Director, with Press Transport Scotland and the Director to review the effectiveness of the Unit-specific communications plan and to agree any improvements or amendments for the following quarter.

1.3.5 The Media and Communications Manager shall attend biannual meetings on dates to be notified by the Director, with all media and communications officers of operating companies for Trunk Road networks outside the Unit. Press Transport Scotland and the Director to review the effectiveness of communications plans and strategies and to agree any improvements and or new or revised objectives for the following six months.

1.4 Website and Digital Communications

1.4.1 The Operating Company shall comply with the requirements of Schedule 3 Part 6 in relation to its Unit-specific website and the use of social media.

2. CORRESPONDENCE, ENQUIRIES AND COMPLAINTS

2.1 General

2.1.1 The Operating Company shall appoint a Correspondence Officer in accordance with the requirements of Schedule 5 Part 4.

2.1.2 The Director will provide the Operating Company with draft standard text for use in the direct replies or in the draft responses to be provided under this Part.

2.1.3 All information referred to in this Part which is to be submitted to the Director shall be submitted by e-mail. All requests from the Director to the Operating Company for draft responses, briefings and other information will be sent by e-mail or any other electronic means specified by the Director.

2.2 Ministerial and Transport Scotland Correspondence

2.2.1 When requested by the Director, the Operating Company shall provide to the Director draft responses and briefing material in relation to any request which has been received by the Scottish Ministers or Transport Scotland. Such requests will relate to any matter requiring input which is relevant to the Operating Company or this Contract.

2.2.2 The Operating Company shall provide the draft response, in a format prescribed by the Director, within five Working Days of receipt of the Director’s request.

2.2.3 If the Operating Company considers that a draft response cannot be provided within five Working Days of receipt of such request, it shall notify the Director immediately on such receipt, giving full details of why it considers that the timescale cannot be complied with and shall provide the draft response within any longer period consented to by the Director.

2.3 Parliamentary Questions

2.3.1 When requested by the Director, the Operating Company shall provide the Director with:

(i) a briefing note related to the topics raised in written or oral Parliamentary questions from Members of the Scottish Parliament, Members of the United Kingdom Parliament and or Members of the European Parliament, and

(ii) a draft reply in editable electronic form to allow the Director to develop a suitable response for the Scottish Ministers to issue.

2.3.2 For written questions, the briefing note and draft reply referred to in paragraph 2.3.1 (i) and (ii) of this Part shall be provided to the Director within three Working Days. For oral questions, the briefing note and draft reply referred to in paragraph 2.3.1 (i) and (ii) of this Part shall be provided to the Director within two Working Days.

2.3.3 For First Minister's questions and for topical Parliamentary questions, the Operating Company shall provide the Director with the briefing note and draft reply referred to in paragraph 2.3.1 (i) and (ii) of this Part within the timescale specified by the Director which may be less than one Working Day.

2.4 Direct Responses from the Operating Company

2.4.1 The Operating Company shall respond directly to any correspondence, enquiries and complaints it receives from any source except for those specified in paragraphs 2.4.2, 2.4.3, 2.5 and 2.7 of this Part which will be dealt with in accordance with the provisions of those paragraphs and to the extent that the Operating Company is the Data Processor in accordance with Clause 19.7.2 of Schedule 1.

2.4.2 Where such correspondence, enquiries or complaints (including verbal or any other form of contact) are received from representatives of any media organisation or correspondents that the Operating Company believes may be working for a media organisation or on a freelance basis, it shall follow the procedure specified in Annex 3.5/A of this Part.

2.4.3 When correspondence, enquiries and or complaints (including verbal or any other form of contact) are received from Members of the Scottish Parliament, Members of the United Kingdom Parliament or Members of the European Parliament, the Operating Company shall:

(i) acknowledge the correspondence, enquiries and complaints within five Working Days of receipt,

(ii) forward a copy of the correspondence, enquiries and complaints to the Director no later than one Working Day after receipt, and

(iii) no later than five Working Days after receipt, provide to the Director a briefing note related to the topic raised and a draft letter of reply in editable electronic

form to allow the Director to review and decide on the appropriate course of action.

2.4.4 The Director will either:

(i) decide that the correspondence relates to Operations matters, in which case he will consent to the issue of the draft letter of reply in a form consented to by the Director and authorise the Operating Company to issue a direct response to the correspondence in its own name, or

(ii) decide that the correspondence relates to a Scottish Government or Transport Scotland policy or funding matter or other matters where in the opinion of the Director there are particular sensitivities, in which case the Director will issue a reply on behalf of the Operating Company.

2.4.5 The Director will notify the Operating Company in writing of his decision. In cases where the Operating Company is authorised to reply directly, it shall provide the Director with a copy of the final reply no later than one Working Day after issue. In cases where the Director intends to reply on behalf of the Operating Company, he will provide the Operating Company with a copy of his issued response.

2.5 The Environmental Information (Scotland) Regulations 2004 and Freedom of Information (Scotland) Act 2002 Requests

2.5.1 The Operating Company shall provide to the Director, on request, all information and relevant data requested in any information request received by the Director under the *Information Acts*, in order to allow the development of a response by the Director. Such information and data shall be provided to the Director within ten Working Days.

2.5.2 When the Operating Company receives a direct request for information in relation to the *Information Acts*, it shall acknowledge receipt and explain to the requester that, as a private company, it is not subject to the *Information Acts*. The Operating Company shall forward the request to the Director.

2.6 The Equality Act 2010

2.6.1 When the Operating Company receives a request for a briefing note in relation to:

(i) written or oral Parliamentary questions from Members of the Scottish Parliament, or

(ii) direct correspondence,

which relates to barriers to accessibility as defined by the *Equality Act 2010*, the Operating Company shall check whether the issue is registered within the routine maintenance and management function of the Integrated Roads Information System.

2.6.2 Where the issue is not registered, the Operating Company shall notify the Director and the Director will discuss and agree with the Operating Company whether it should be registered.

2.7 Media Enquiries

2.7.1 All enquiries to the Operating Company from television companies, radio stations and the press shall be dealt with by the Media and Communications Manager.

2.7.2 The Media and Communications Manager shall operate in accordance with the media enquiries procedure stated in Annex 3.5/A of this Part.

2.7.3 The Operating Company shall maintain an electronic register of media enquiry forms, as provided in Annex 3.5/B of this Part, at the Central Office. The register shall be available for inspection at all times by the Director and the Performance Audit Group.

2.7.4 No later than 30 days prior to Commencement of Service Date 1, the Operating Company shall submit its proposed arrangements for dealing with media enquiries received between 08:00 hours and 17:00 hours on each Working Day, and any received outside these hours, to the Director for written consent. The Operating Company's proposals shall provide out of hours cover that matches the potential needs of Press Transport Scotland driven by its 24 hour news service and which ensures staff of suitable seniority are available to authorise the release of information when necessary.

2.8 Communications Register

2.8.1 The Operating Company shall maintain an electronic register of all communications it receives and the replies thereto relating to the Unit or to this Contract. The information recorded in the register in respect of each communication received from the Director, or any other source, shall include as a minimum:

(i) date of receipt of the communication and whether it is verbal or written,

(ii) details of the communication, including whether it is related to *the Equality Act 2010*, and or whether it is an enquiry or a complaint,

(iii) details of how any complaints are dealt with and resolved,

(iv) whether the communication requires a response,

(v) date of issue of written information to the Director with the reference number and transmittal method,

(vi) date of issue and a copy of the Director's signed reply to the originator,

(vii) date of issue and a copy of any direct reply from the Operating Company to the originator,

(viii) any follow up actions to be taken by either the Operating Company or the Director,

(ix) details of any commitments made,

(x) date by which a commitment is to be completed, and

(xi) date on which a commitment was completed.

2.9 Monthly and Annual Summaries to be Maintained

2.9.1 The communications register referred to in paragraph 2.8.1 of this Part shall be capable of producing summarised reports for each calendar month and for each Annual Period which shall be available for inspection by the Director and or the Performance Audit Group. The communications register shall contain the following information:

(i) number of communications received from the Director,

(ii) number and type of communications received from all other sources,

(iii) number of communications requiring a response,

(iv) number of draft responses provided to the Director within and outwith the five Working Days limit referred to in paragraph 2.2.2,

(v) number of briefing notes and draft replies provided within the three Working Day and two Working Day limits specified respectively in paragraph 2.3.2,

(vi) number of briefing notes and draft replies provided within the time limits specified by the Director in accordance with paragraph 2.3.3,

(vii) number of communications acknowledged within and outwith the five Working Days limit referred to in paragraph 2.4.3 (i),

(viii) number of communications forwarded to the Director within and outwith the one Working Day limit referred to in paragraph 2.4.3 (ii),

(ix) number of briefing notes and draft replies prepared for, and provided to, the Director within and outwith the five Working Day limit referred to in paragraph 2.4.3 (iii),

(x) number of final replies issued within and outwith the one Working day limit referred to in paragraph 2.4.5,

(xi) information and relevant data provided within time periods specified by the Scottish Ministers in terms of this Contract,

(xii) average response time in days for all communications, broken down into communication type,

(xiii) number of commitments completed within the due date, and

(xiv) number of commitments not completed within the due date.

2.9.2 The Operating Company shall produce a monthly summary for the preceding month, by the 15th day of each month, until the Service End Date.

2.9.3 The Operating Company shall produce an annual summary by 15 April each year, covering the preceding Annual Period, until the Service End Date.

This is Annex 3.5/A to Schedule 3 Part 5 referred to in the foregoing Agreement between Scottish Ministers and Amey LG Limited.

SCOTTISH MINISTERS' REQUIREMENTS

SCHEDULE 3 PART 5

COMMUNICATIONS STRATEGY, CORRESPONDENCE, ENQUIRIES AND COMPLAINTS

ANNEX 3.5/A – Media Enquiries and Procedure

SCOTTISH MINISTERS' REQUIREMENTS

SCHEDULE 3 PART 5

COMMUNICATIONS STRATEGY, CORRESPONDENCE, ENQUIRIES AND COMPLAINTS

ANNEX 3.5/A – Media Enquiries and Procedure

Procedure

1. This procedure sets out the arrangements for handling media enquiries received by the Operating Company.
2. The Media and Communications Manager shall speak for the Operating Company and shall liaise with Press Transport Scotland.
3. Information requested, and the Operating Company's proposed response, shall be recorded on the media enquiry form provided in Annex 3.5/B of this Part and this shall be sent immediately to the Director, the Performance Audit Group and Press Transport Scotland
4. The Operating Company shall identify on the media enquiry form provided in Annex 3.5/B further actions required and the proposed response, together with the timescale proposed for undertaking the further actions.
5. The Media and Communications Manager shall telephone Press Transport Scotland to discuss the proposed response within one hour of the media enquiry form having been sent.
6. The Operating Company shall have discretion to give an immediate response when the media question is about factual, non-controversial matters. In these circumstances, Press Transport Scotland and the Director shall be notified immediately of such questions and responses using the media enquiry form provided in Annex 3.5/B. The form shall be marked 'Factual – Non Controversial Media Call' for identification purposes.
7. Any media questions on Transport Scotland and Scottish Government policy, Transport Scotland or Scottish Government funding or matters where there is a possibility of political sensitivity shall be passed to Press Transport Scotland for action.
8. A copy of the Transport Scotland response will be passed to the Media and Communications Manager by Press Transport Scotland for information.
9. The Media and Communications Manager shall maintain frequent and regular contact with Press Transport Scotland who shall be notified of all contact from television companies, radio stations and the press with the Media and Communications Manager and shall be given the opportunity to comment on all proposed media statements other than those described in paragraph 6 above.
10. All media releases from the Operating Company shall be sent to the Director, the Performance Audit Group and Press Transport Scotland.

This is Annex 3.5/B to Schedule 3 Part 5 referred to in the foregoing Agreement between Scottish Ministers and Amey LG Limited.

SCOTTISH MINISTERS' REQUIREMENTS

SCHEDULE 3 PART 5

COMMUNICATIONS STRATEGY, CORRESPONDENCE, ENQUIRIES AND COMPLAINTS

ANNEX 3.5/B – Media Enquiries Form

SCOTTISH MINISTERS' REQUIREMENTS

SCHEDULE 3 PART 5

COMMUNICATIONS STRATEGY, CORRESPONDENCE, ENQUIRIES AND COMPLAINTS

ANNEX 3.5/B – Media Enquiries Form

To …….

From ……

As required in Annex 3.5/A, please find information requested by the following organisation that requires a response from the Operating Company and Transport Scotland.

Source of Enquiry

Organisation	Contact	Date and Time received	Operating Company Contact and telephone number

Details of Enquiry

Details of Proposed Response

Further Action Proposed

Deadline

This notice has been sent to

Name				Transport Scotland media officer
Name				TRBO
Name				Performance Audit Group

SCOTTISH MINISTERS' REQUIREMENTS

SCHEDULE 3 PART 6

CUSTOMER CONTACT SERVICES

CONTENTS **Page No.**

1.	**TRANSPORT SCOTLAND'S TRAFFIC CUSTOMER CARE LINE SERVICE REQUIREMENTS**	**1**
1.1	General	1
1.2	Traffic Customer Care Line Contact Requirements	1
1.3	Customer Enquiries Submitted by the Traffic Customer Care Line Operator	2
1.4	Customer Call-backs	2
1.5	Responses to Customer Enquiries	2
1.6	Clarification of Customer Enquiries	2
1.7	Customer Enquiry Classifications and Call Types Used by the Traffic Customer Care Line Operator	3
1.8	Fault Reporting	4
2.	**BRANDING REQUIREMENTS**	**4**
2.1	General	4
2.2	Unit Specific Website Requirements	5
2.3	Social Media	5
2.4	Transport Scotland's Forth Bridges Forum Website Requirements	6

ANNEX 3.6/A – Customer Enquiries Classified as Emergencies by the Traffic Customer Care Line **7**

ANNEX 3.6/B – Customer Enquiry Information Supplied by the Traffic Customer Care Line **11**

ANNEX 3.6/C – Timescales for Responses to the Traffic Customer Care Line Operator and for Customer Call-backs **15**

ANNEX 3.6/D – Updates on the Status of Customer Enquiries **19**

ANNEX 3.6/E – Third Party Damage **23**

ANNEX 3.6/F – Network Customer Information Sign Showing Customer Contact Telephone Number **27**

ANNEX 3.6/G – Use of Social Media **31**

SCOTTISH MINISTERS' REQUIREMENTS

SCHEDULE 3 PART 6

CUSTOMER CONTACT SERVICES

1. TRANSPORT SCOTLAND'S TRAFFIC CUSTOMER CARE LINE SERVICE REQUIREMENTS

1.1 General

1.1.1 To complement information provided by the Traffic Scotland Service, Transport Scotland provides its customers with timely and accurate travel information relating to Scotland's strategic Trunk Road network through the Traffic Customer Care Line, a dedicated 24 hour phone service, which is delivered currently through a call centre. The Director will provide details of the current Traffic Customer Care Line Operator and will notify the Operating Company of any changes as necessary thereafter. The Traffic Customer Care Line serves as a single point of contact for customers with enquiries relating to sections of the Unit maintained by the Operating Company.

The Director will notify the Operating Company in writing of any changes made to the Traffic Customer Care Line Operator role or telephone number during the Contract Period.

1.1.2 The Operating Company shall liaise regularly with the Traffic Customer Care Line Operator during Mobilisation Period 1, including attending at least one meeting prior to Commencement of Service Date 1. Following Commencement of Service Date 1, the Operating Company shall meet the Traffic Customer Care Line Operator and the Director at least annually to provide feedback and improve the coordination arrangements between the Operating Company and the Traffic Customer Care Line Operator in delivering the service.

1.2 Traffic Customer Care Line Contact Requirements

1.2.1 The Operating Company shall provide all necessary resources including competent, trained and experienced staff on duty during both Normal Working Hours and outwith Normal Working Hours to deliver the requirements relating to the Traffic Customer Care Line service as defined within this Part.

The Operating Company shall immediately notify the Traffic Customer Care Line Operator in writing of cover arrangements during periods of staff absence due to holidays, sickness and the like.

1.2.2 The Operating Company shall provide the Traffic Customer Care Line Operator with a dedicated, 24 hours a day, telephone number and e-mail address throughout the term of this Contract for all communications including the transfer of calls received by the Traffic Customer Care Line Operator requiring a response by the Operating Company and those identified by the Traffic Customer Care Line Operator as emergency calls in accordance with paragraph 1.7.1 (ii) and Annex 3.6/A of this Part.

The Operating Company shall provide the Traffic Customer Care Line Operator with this contact information no later than 30 days prior to Commencement of Service Date 1. The Operating Company shall notify the Traffic Customer Care Line Operator immediately of any alteration to the contact information provided.

1.3 Customer Enquiries Submitted by the Traffic Customer Care Line Operator

1.3.1 The Traffic Customer Care Line service is responsible for receiving and transferring to the Operating Company, telephone calls relating to sections of the Unit maintained by the Operating Company.

The Traffic Customer Care Line Operator will notify the Operating Company of such information by submitting customer enquiries via email, common internet access or telephone calls. Annex 3.6/B of this Part details the information that is supplied within any such customer enquiry by the Traffic Customer Care Line Operator to the Operating Company.

The Operating Company shall respond in accordance with the timescales prescribed in Annex 3.6/C of this Part.

1.3.2 The Operating Company shall, as a minimum, have within the Management System and Quality Plan documented procedures for dealing with all types of customer enquiries classified and submitted by the Traffic Customer Care Line Operator. These procedures shall ensure that all customer enquiries identified as emergencies by the Traffic Customer Care Line Operator are responded to immediately.

When the Operating Company determines that other Operational Partners may be affected by Traffic Customer Care Line customer enquiries, the Operating Company shall immediately notify, liaise and coordinate its response with the appropriate Operational Partners as required.

1.4 Customer Call-backs

1.4.1 The Operating Company shall provide customers requiring call-backs with updates in accordance with the timescales detailed in Annex 3.6/C of this Part using the method of communication preferred by the customer.

1.5 Responses to Customer Enquiries

1.5.1 Where responses to customer enquiries are provided to the Traffic Customer Care Line Operator by the Operating Company, such responses shall be provided in accordance with the timescales detailed in Annex 3.6/C of this Part and contain, as a minimum, the information specified in Annex 3.6/D of this Part. Responses shall be provided via email, common internet access or telephone call as appropriate, using one of the following classifications as defined in Annex 3.6/D of this Part:

(i) "Received", or

(ii) "WIP (work in progress)", or

(iii) "Closed".

The Operating Company shall also provide any additional information it deems relevant to the status of the customer enquiry.

1.6 Clarification of Customer Enquiries

1.6.1 The Operating Company shall review all customer enquiries to ensure the information provided by the Traffic Customer Care Line Operator is clear and accurate.

1.6.2 If the Operating Company considers the information contained within a customer enquiry is incomplete or incorrect, or it cannot identify accurately the affected sections of the Trunk Road network, it shall contact the Traffic Customer Care Line Operator

via email or telephone call to request the relevant additional or corrected information and an updated customer enquiry within one hour of identifying the need for such information.

The Traffic Customer Care Line Operator will make the required additions or corrections and reissue the customer enquiry.

1.6.3 Where the Operating Company considers a customer enquiry to be either incomplete or incorrect, the response time requirements detailed in Annex 3.6/C of this Part shall only apply once an updated customer enquiry is received by the Operating Company.

1.6.4 Where customer enquiries are submitted to the incorrect operating company, the Operating Company shall forward these to the correct operating company and inform the Traffic Customer Care Line Operator of the error immediately via email.

1.7 Customer Enquiry Classifications and Call Types Used by the Traffic Customer Care Line Operator

1.7.1 The Traffic Customer Care Line Operator will classify each customer enquiry submitted to the Operating Company as either "complaint", "emergency", "enquiry" or "routine":

(i) "complaint" relates to customer enquiries identifying customer dissatisfaction regarding the service provided by the Operating Company,

(ii) "emergency" relates to customer enquiries where an immediate response by the Operating Company is required to prevent potential danger to the public or disruption to the operational effectiveness of the Trunk Road network. Details of typical Incidents that might be classified as emergencies by the Traffic Customer Care Line Operator are provided in Annex 3.6/A of this Part,

(iii) "enquiry" relates to customer enquiries requiring the Operating Company to respond regarding aspects of the maintenance of the Trunk Road network within the Unit. A request for a response to the customer will also be passed to the Operating Company, and

(iv) "routine" relates to routine maintenance or non-emergency customer enquiries or scenarios that do not pose a danger to the public or do not have the potential to disrupt the operational effectiveness of the Trunk Road network.

1.7.2 All definitions in Schedule 1 Part 1 take precedence over any classification of customer enquiry or call type used by the Traffic Customer Care Line Operator. In the event of any conflict, the Operating Company shall notify the Traffic Customer Care Line Operator accordingly and confirm what action it intends to take.

1.7.3 The customer enquiry classification categories will be further categorised by the Traffic Customer Care Line Operator, using one or more of the following call types:

(i) Defect report where the customer reports a Defect with any aspect of the Trunk Road network,

(ii) third party damage where the customer reports damage to property sustained as a result of the condition of the Trunk Road network or the activities of the Operating Company. Where the customer requests a claim form, the Traffic Customer Care Line shall collect appropriate details in

accordance with Annex 3.6/E of this Part and transfer such request to the Operating Company,

(iii) roadworks enquiry where the customer enquires about any aspect of current or planned roadworks on the Trunk Road network,

(iv) road conditions enquiry where the customer enquires about the status of road conditions on the Trunk Road network,

(v) Severe Weather enquiries where the customer requires Severe Weather related road condition information, and

(vi) repeat calls where the customer has previously made an enquiry. Such calls shall be passed to the Operating Company in the form of an update to the original work request.

1.8 Fault Reporting

1.8.1 Any system failure of the Traffic Customer Care Line which leads to customer enquiries not being sent to the Operating Company results in an automatic notification being sent to the Traffic Customer Care Line faults mailbox. The Operating Company shall be given access to this mailbox.

1.8.2 In the event of planned or short-term loss of the Traffic Customer Care Line system, calls will be diverted to the Operating Company's nominated contact who shall collate and transfer call details and pass them to the Traffic Customer Care Line Operator.

2. BRANDING REQUIREMENTS

2.1 General

2.1.1 The Operating Company shall supply, erect and, at the end of this Contract Period, remove network customer information plated signs as detailed in Annex 3.6/F of this Part at key locations within the Unit.

No later than 30 days prior to Commencement of Service Date 1, the Operating Company shall submit the proposed locations of the signs and the details of the logo that it proposes to utilise on these signs to the Director for written consent. On receipt of the Director's written consent, the Operating Company shall manufacture suitable plates containing the logo. These signs shall be installed during the first seven days of the first Annual Period.

2.1.2 The Operating Company shall produce an information leaflet which shall include details describing the extent of the Unit, the services provided by the Operating Company and appropriate telephone contact numbers for the Operating Company and the Traffic Customer Care Line.

2.1.3 The draft leaflet shall be submitted for the written consent of the Director not later than 30 days prior to Commencement of Service Date 1. On receipt of the Director's written consent, and not later than Commencement of Service Date 1, the Operating Company shall produce and distribute one copy of the leaflet per property to all properties having direct access on to the Trunk Roads within the Unit. The Operating Company shall also contact:

(i) outlets within the Unit including filling stations, refreshment places and post offices, and

(ii) Statutory Authorities' establishments including local authority offices, libraries and police stations,

to establish if they are willing to display stocks of the leaflet and how many copies of the leaflets are required.

2.1.4 The Operating Company shall provide further copies of the leaflet on request.

2.2 Unit Specific Website Requirements

2.2.1 The Operating Company shall host a Unit-specific website. The website, in addition to the Operating Company website address, shall be accessible from a set of domain names which were in use by FETA and will be provided by the Director. The requirements for the establishment of the Operating Company's Unit-specific website are detailed in Schedule 1, Clause 6.

2.2.2 The Unit-specific website shall replace the FETA website and the functionality and content of the Unit-specific website shall provide or direct users to similar information where appropriate.

2.2.3 In addition to the requirements detailed in Schedule 1, Clause 6, the Operating Company shall also utilise its Unit-specific website for the following issues, however, this is not meant to duplicate the Traffic Scotland website:

(i) demonstrate added value to a more local audience by providing timely, accurate and reliable information on issues being faced by the Unit, to allow informed decisions to be made on travel arrangements. Such information shall include how, where and when the normal operation of the Trunk Road network has been affected and how it will impact on users,

(ii) highlight in a transparent manner what the Operating Company is doing to proactively manage and monitor the network,

(iii) provide greater detail on roadworks, closures, Incidents and special events occurring within the Unit than the information published on the Traffic Scotland website. Such information shall include dates and timings of such events similar to that logged within the Automated Diary Facility.

2.2.4 The Operating Company shall manage and keep the Unit-specific website up to date on a daily basis until the Service End Date and shall:

(i) supply the Director with monthly reports on usage figures on all pages contained within the Unit-specific website, and

(ii) remove or amend content or structure if requested by the Director.

2.3 Social Media

2.3.1 The Operating Company shall use social media for improved communications with customers. Proposals to use social media shall be submitted to the Director for his written consent by no later than 30 days prior to Commencement of Service Date 1.

2.3.2 During Mobilisation Period 1 the Operating Company shall review the FETA policy and actions when communicating with its customers using social media. The Director will provide access to social media accounts previously maintained by FETA and the Operating Company proposals for the use of social media shall provide continuity for this service.

2.3.3 When the Director gives written consent for the use of social media, the Operating Company shall:

(i) ensure information provided through social media is accurate and kept up to date at all times,

(ii) moderate third party comments when possible, and

(iii) remove any information provided through social media if instructed to do so by the Director.

When posting information or otherwise administering content of social media, the Operating Company shall comply with Annex 3.6/G of this Part.

2.4 Transport Scotland's Forth Bridges Forum Website Requirements

2.4.1 On behalf of and in support of the functions of the Forth Bridges Forum, the Operating Company shall host Transport Scotland's "Forth Bridges Forum Website", which contains pages relating to the Forth Bridges Forum, the Forth Road Bridge, the Queensferry Crossing and the Forth (Rail) Bridge, from a date determined by the Director until Service End Date.

2.4.2 The Operating Company shall refresh the website with additional content and remove expired content at intervals not exceeding two weeks.

2.4.3 Not more than five articles with new content will be provided to the Operating Company for publication on the website each month by participating organisations. New content to the Director for consent before publication. The Operating Company shall format content which is to be published on the website shall be formatted to ensure it is presented in a consistent style.

The Operating Company shall provide an article for publication on the website each month. Articles shall be consistent with the functions of the Forth Bridges Forum and may be specific to the Unit or contain relevant Forth Road Bridge, the Queensferry Crossing and the Forth (Rail) Bridge related information. The Operating Company's articles shall not promote or publicise any organisation but they may be published on other websites with additional content.

2.4.4 The Operating Company shall hold and manage a database of contact names relating to the website. This database shall be kept separately from any other similar database used by the Operating Company and shall not be used for activities not related to the Forth Bridges Forum.

This is Annex 3.6/A to Schedule 3 Part 6 referred to in the foregoing Agreement between Scottish Ministers and Amey LG Limited.

SCOTTISH MINISTERS' REQUIREMENTS

SCHEDULE 3 PART 6

CUSTOMER CONTACT SERVICES

ANNEX 3.6/A – Customer Enquiries Classified as Emergencies by the Traffic Customer Care Line

SCOTTISH MINISTERS' REQUIREMENTS

SCHEDULE 3 PART 6

CUSTOMER CONTACT SERVICES

ANNEX 3.6/A – Customer Enquiries Classified as Emergencies by the Traffic Customer Care Line

The descriptions below provide an indication of call types which the Traffic Customer Care Line Operator will regard as emergencies. The Traffic Customer Care Line Operator defines an emergency as any Incident or fault that poses a danger to the public or has the potential to disrupt the operational effectiveness of the Trunk Road network. This list is not exhaustive.

Emergency	Descriptions
Crash Barrier / Fencing Damage	Damaged Crash Barrier
	Boundary fence damage
Debris / Animals	Dead animals on live lanes and hard shoulder
	Live animals on carriageway
	Debris on live lane or hard shoulder & verge if likelihood could blow back onto live lane.
	Debris on centre reservation – obstructs vision, possibly blow onto carriageway
Drains / Manhole Covers	Damaged or Missing manhole cover
	Collapsed gully
Flooding	Flooding
Landscaping / Overhanging Branches	Grass cutting / landscaping – obscures visibility splays, trees down on carriageway or footpaths, overhanging branches.
Other	Calls from Emergency Services requiring road closures. Road closures as a result of accidents and Incidents
	Bridge Strikes, parapet strikes, high winds or other
Potholes	Damage to road pavement
Road Traffic Accident (RTA)	Report of road traffic accident
	Debris, spillage as a result of RTA
	Diversions, Traffic Management
	RTA involving electrical unit
Road Works	Cones, signs, lamps scattered
Spillage	All spillages including oil, petrol, diesel, hydraulic fluid / chemical / fish oil etc
Street Lighting	Dark sections (3 or more consecutive)
	Door off / wires exposed
	Damaged electrical road signs, lighting columns
	Hanging lanterns, hanging bowls
	Exposed wiring on electrical installation
Subsidence	Road subsidence
Traffic Related Signs	Damaged, facing in wrong direction, hanging from mounting

Emergency	Descriptions
Traffic Signal	All dark, stuck on RED – emergency at specified locations
	Pedestrian crossing all dark
	Two or more red lamps dark in same direction
	In-operative push button
	2 or more reports of signal stuck on red. Outwith office hours, monitor for any other calls before calling emergency.

This is Annex 3.6/B to Schedule 3 Part 6 referred to in the foregoing Agreement between Scottish Ministers and Amey LG Limited.

SCOTTISH MINISTERS' REQUIREMENTS

SCHEDULE 3 PART 6

CUSTOMER CONTACT SERVICES

ANNEX 3.6/B – Customer Enquiry Information Supplied by the Traffic Customer Care Line

SCOTTISH MINISTERS' REQUIREMENTS

SCHEDULE 3 PART 6

CUSTOMER CONTACT SERVICES

ANNEX 3.6/B – Customer Enquiry Information Supplied by the Traffic Customer Care Line

In accordance with paragraph 1.3.1 of this Part, the following tables show typical information which will be supplied by the Traffic Customer Care Line Operator to the Operating Company within submitted customer enquiries:

Data Field	Description
Service request ID	Unique Request ID of the call
Route	Route on which Incident is located
X-coordinate	X-Coordinate of Incident location
Y-coordinate	Y-Coordinate of Incident location
Caller first name	First name of the caller
Caller last name	Surname of the caller
Caller add name num	Caller's property number
Caller add 1	First line of caller's address
Caller add 2	Second line of caller's address
Caller add town	Caller's town
Caller add county	Caller's county
Post code	Caller's Postcode
Caller phone	Caller's Phone number
Date time requested	Time the call came in
Category 1 (as defined below)	First category of the call
Category 2 (as defined below)	Second category of the call
Category 3 (as defined below)	Third category of the call
Summary	Summary of the call
Details	More details about the call

Remedy category requirements used by the Traffic Customer Care Line Operator. This list is indicative only and not exhaustive.

Category 1 - Operating Company responsible for Unit where incident has occurred	**Category 2 - Type of incident (Applicable to all Category 1 options except 'Local Authority')**	**Category 3 - Call type**
	Type of Incident	Complaint
	Abandoned/Broken Down Vehicle	Emergency
	Crash Barrier / Fencing Damage	Enquiry
	Debris / Animals	Routine
	Drains / Manhole Covers	
	Flooding	
	Grass Cutting (Winter Months - Winter Related)	
	Landscaping / Overhanging Branches	
	Litter	
	Local Authority Emergency	
	Other	
	Pothole	
	Road Conditions	
	Road Markings	
	Road Traffic Accident	
	Road Works	
	Spillage	
	Street Lighting	
	Subsidence	
	Traffic Related Signs	
	Traffic Signal	
	Third Party Damage	Claim Form
Other	Local Authority	Non-Emergency
	Other Operating Companies	Non-Emergency
	Bridges	Non-Emergency

This is Annex 3.6/C to Schedule 3 Part 6 referred to in the foregoing Agreement between Scottish Ministers and Amey LG Limited.

SCOTTISH MINISTERS' REQUIREMENTS

SCHEDULE 3 PART 6

CUSTOMER CONTACT SERVICES

ANNEX 3.6/C – Timescales for Responses to the Traffic Customer Care Line Operator and for Customer Call-backs

SCOTTISH MINISTERS' REQUIREMENTS

SCHEDULE 3 PART 6

CUSTOMER CONTACT SERVICES

ANNEX 3.6/C – Timescales for Responses to the Traffic Customer Care Line Operator and for Customer Call-backs

Responses to the Traffic Customer Care Line Operator

Work Request Type	**Response Time to Customer Enquiries received after 06:00 Monday up to 19:00 Friday**		**Response Time to Customer Enquiries received after 19:00 Friday up to 06:00 Monday**	
	Maximum response time		Maximum Response time	
	After 06:00 up to 19:00	After 19:00 up to 06:00		
Emergency	1 hour	2 hours	Emergency	2 hours
Enquiry	24 hours	24 hours	Enquiry	No later than 07:00 the following Tuesday
Complaint	24 hours	24 hours	Complaint	No later than 07:00 the following Tuesday
Routine	48 hours	48 hours	Routine	No later than 07:00 the following Wednesday

Responses to Customers Requiring Call-backs

Customer Enquiry Type	Frequency of call-back
Emergency	Within an hour of first notification and then hourly until the emergency is resolved.
Enquiry	(i) within 24 hours of first notification to acknowledge the enquiry, (ii) to confirm the required information has been found, and (iii) notification of formal response.
Complaint	(i) within 24 hours of first notification to acknowledge the complaint, (ii) to confirm resolution of complaint, and (iii) notification of formal response.
Routine	(i) within 48 hours of first notification to acknowledge the enquiry, (ii) to confirm the required information has been found, and (iii) notification of formal response.

This is Annex 3.6/D to Schedule 3 Part 6 referred to in the foregoing Agreement between Scottish Ministers and Amey LG Limited.

SCOTTISH MINISTERS' REQUIREMENTS

SCHEDULE 3 PART 6

CUSTOMER CONTACT SERVICES

ANNEX 3.6/D – Updates on the Status of Customer Enquiries

SCOTTISH MINISTERS' REQUIREMENTS

SCHEDULE 3 PART 6

CUSTOMER CONTACT SERVICES

ANNEX 3.6/D – Updates on the Status of Customer Enquiries

Information to be supplied by the Operating Company to the Traffic Customer Care Line Operator when providing updates on the status of customer enquiries shall, as a minimum, include:

Data Field	Description
Service Request ID	Traffic Customer Care Line Operator call reference.
Customer Enquiry Status	Containing: **'Received'** The Traffic Customer Care Line Operator shall be updated via email, data file transfer or telephone call by the Operating Company with a 'received' classification when the customer enquiry has been acknowledged by the Operating Company but no remedy has been undertaken. or **'WIP (work in progress)'** The Traffic Customer Care Line Operator shall be updated via email, data file transfer or telephone call by the Operating Company with a 'WIP' classification when the customer enquiry has been acknowledged by the Operating Company and a remedy has been undertaken but not completed. or **'Closed'** The Traffic Customer Care Line Operator shall be updated via email, data file transfer or telephone call by the Operating Company with a 'closed' classification when the customer enquiry has been acknowledged by the Operating Company and a remedy has been completed and no further work is required to be undertaken.
Comments	
Issued date and time	
Actual completion Date and Time	
Deleted Date and Time	

This is Annex 3.6/E to Schedule 3 Part 6 referred to in the foregoing Agreement between Scottish Ministers and Amey LG Limited.

SCOTTISH MINISTERS' REQUIREMENTS

SCHEDULE 3 PART 6

CUSTOMER CONTACT SERVICES

ANNEX 3.6/E – Third Party Damage

SCOTTISH MINISTERS' REQUIREMENTS

SCHEDULE 3 PART 6

CUSTOMER CONTACT SERVICES

ANNEX 3.6/E – Third Party Damage

Typical information collected and supplied by the Traffic Customer Care Line Operator to the Operating Company regarding third party damage shall include:

Time and Date of Incident
Location (including direction of travel and lane travelled in)
Vehicle Make, Model and Registration Number
Driver's full particulars
Alleged damage to vehicle
Caused of damage e.g. pothole, struck debris etc.
Additional information: (i) Where an Operating Company vehicle is involved in any damage, the Traffic Customer Care Line Operator will obtain from the caller the registration of any Operating Company vehicle involved. Such data shall be controlled in accordance with the *Data Protection Act 1998.*

This is Annex 3.6/F to Schedule 3 Part 6 referred to in the foregoing Agreement between Scottish Ministers and Amey LG Limited.

SCOTTISH MINISTERS' REQUIREMENTS

SCHEDULE 3 PART 6

CUSTOMER CONTACT SERVICES

ANNEX 3.6/F – Network Customer Information Sign Showing Customer Contact Telephone Number

SCOTTISH MINISTERS' REQUIREMENTS

SCHEDULE 3 PART 6

CUSTOMER CONTACT SERVICES

ANNEX 3.6/F – Network Customer Information Sign Showing Customer Contact Telephone Number

This is Annex 3.6/G to Schedule 3 Part 6 referred to in the foregoing Agreement between Scottish Ministers and Amey LG Limited.

SCOTTISH MINISTERS' REQUIREMENTS

SCHEDULE 3 PART 6

CUSTOMER CONTACT SERVICES

ANNEX 3.6/G – Use of Social Media

SCOTTISH MINISTERS' REQUIREMENTS

SCHEDULE 3 PART 6

CUSTOMER CONTACT SERVICES

ANNEX 3.6/G – Use of Social Media

1. **Introduction**

"Social media" is the term commonly given to websites and online tools which allow users to interact with each other in some way – by sharing information, opinions, knowledge and interests. As the name implies, social media involves the building of communities or networks, encouraging participation and engagement.

2. **Principles**

These principles apply to your online participation and sets out the standards of behaviour expected of the Operating Company:

(i) Be professional, remember that you are an ambassador for your organisation and the Scottish Government. Wherever possible, disclose your position within the Operating Company.

(ii) Be responsible, be honest at all times and when you gain insight, share it with the Director where appropriate.

(iii) Be credible, accurate, fair and thorough.

(iv) Always remember that participation online results in your comments being permanently available and open to being republished in other media.

(v) Never give out personal details like home address and phone numbers.

(vi) Stay within the legal framework and be aware that defamation, copyright and data protection laws apply.

See Figure 3.6.G.1 – Process for Replying through Social Media.

Figure 3.6.G.1 – Process for Replying through Social Media

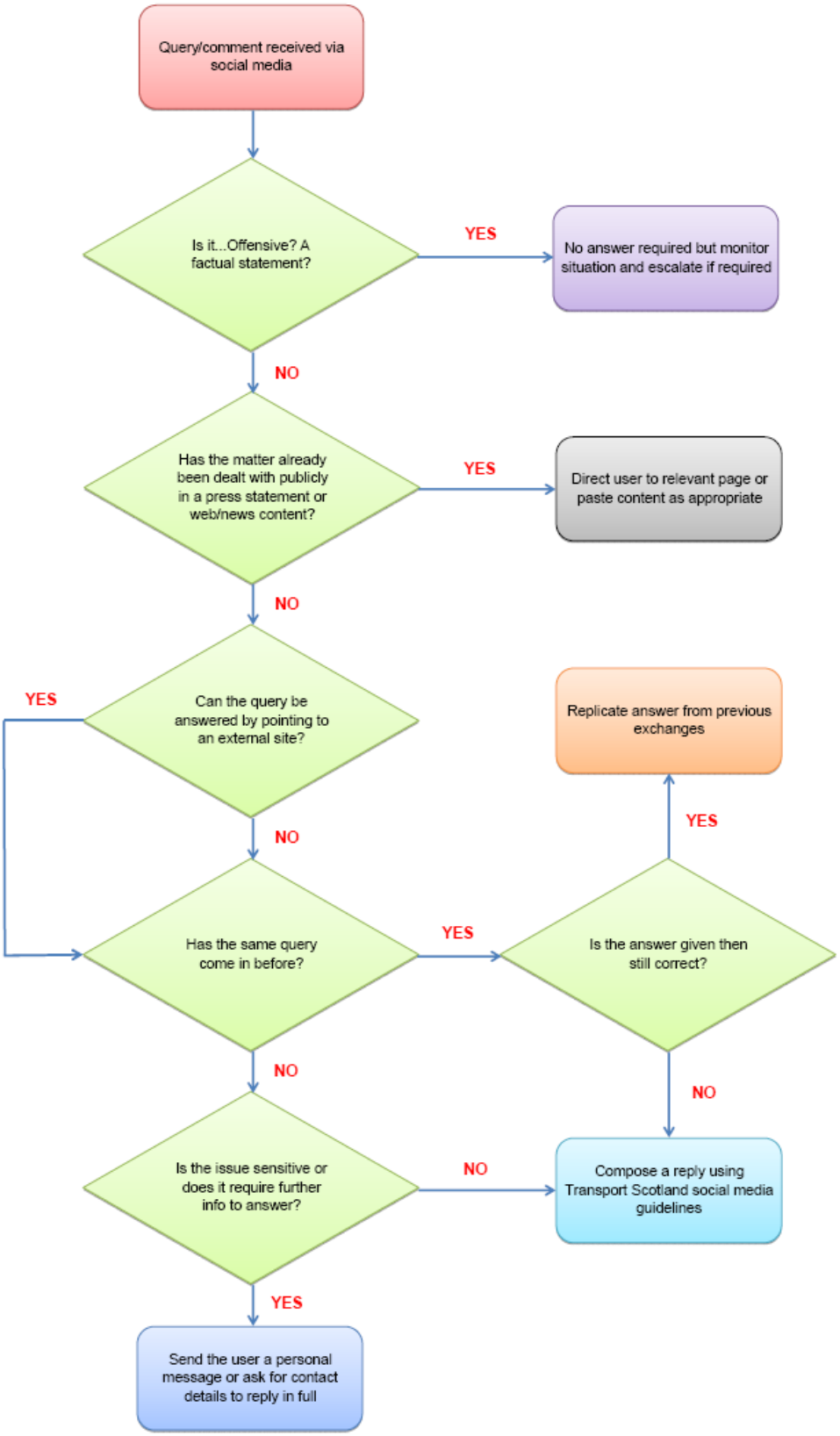

SCOTTISH MINISTERS' REQUIREMENTS

SCHEDULE 3 PART 7

NETWORK OPERATIONS SERVICES

CONTENTS **Page No.**

1.	**INTRODUCTION**	**1**
1.1	General	1
1.2	The Traffic Scotland Service	1
1.3	The Traffic Scotland Operations and Infrastructure Services Contractor	1
1.4	The Traffic Scotland Systems Contractor	2
2.	**CONSULTATION, LIAISON, NOTIFICATION AND COORDINATION REQUIREMENTS RELATING TO NETWORK OPERATIONS SERVICES**	**2**
2.1	General	2
2.2	Appointment of Journey Time Reliability Coordinator	3
2.3	Journey Time Reliability Coordinator's Main Duties	3
2.4	Specialist Contractors Appointed by Network Operations	6
2.5	Proposed Operations or Works Contract or Works in the vicinity of Network Operations Equipment	6
2.6	Proposed Operations or Works Contract or Works affecting Network Operations Equipment	6
2.7	Proposed Operations or Works Contract or Work Relating to New Network Operations Equipment	8
2.8	Damage to Network Operations Equipment	9
3.	**SPECIFIC REQUIREMENTS RELATING TO THE TRAFFIC SCOTLAND SERVICE**	**9**
3.1	The Automated Diary Facility	9
3.2	Access to the Automated Diary Facility	10
3.3	Information to be Logged on the Automated Diary Facility	10
3.4	Access to Closed Circuit Television Cameras	11
3.5	Assessment of Roadworks Delays	11
3.6	Notification of Roadworks Delays	12
3.7	Monitoring and Evaluation	13
3.8	Vehicle Activated Signs	14
3.9	Mobile Variable Message Signs	14
3.10	Before-and-After Traffic Counts	16
4.	**SPECIFIC REQUIREMENTS RELATING TO THE FORTH ROAD BRIDGE**	**16**
4.1	Intelligent Transport Systems Equipment	16
ANNEX 3.7/A–	**CONTACT LIST OF NETWORK OPERATIONS SERVICE PROVIDERS**	**17**

ANNEX 3.7/B – NOTIFICATION OF PLANNED OPERATIONS AND WORKS CONTRACTS AND WORK IN THE VICINITY OF NETWORK OPERATIONS EQUIPMENT **21**

ANNEX 3.7/C – NOTIFICATION OF PROPOSED NEW NETWORK OPERATIONS SERVICES SITES **25**

ANNEX 3.7/D – NOTICE TO NETWORK OPERATIONS SERVICE PROVIDER OF DAMAGE OR SUSPECTED DAMAGE TO NETWORK OPERATIONS EQUIPMENT **29**

ANNEX 3.7/E – NETWORK ACCESS FORM FOR THE REQUEST OF INFORMATION ON PLANNED OPERATIONS, WORKS CONTRACTS, WORKS AND EVENTS FROM UTILITIES AND OTHER THIRD PARTIES **33**

ANNEX 3.7/F – CODING FOR ESTIMATED TRAFFIC DELAYS **37**

ANNEX 3.7/G – OVERVIEW OF DELAY MODELLING TOOL **41**

ANNEX 3.7/H – INTELLIGENT TRANSPORT SYSTEMS EQUIPMENT **45**

SCOTTISH MINISTERS' REQUIREMENTS

SCHEDULE 3 PART 7

NETWORK OPERATIONS SERVICES

1. INTRODUCTION

1.1 General

1.1.1 Network Operations is a branch of Transport Scotland which is responsible for the provision of a number of traffic, travel information and on-road customer support services all of which are aimed at improving the operational efficiency and journey time reliability of the Trunk Road network. These services are managed by Network Operations and delivered on behalf of the Director by the Traffic Scotland Operations and Infrastructure Services Contractor and Traffic Scotland Systems Contractor as referred to in Annex 3.7/A of this Part and others, they are referred to within this Part as Network Operations service providers.

1.1.2 The Operating Company shall support the Director and the Network Operations service providers in the delivery of such services in the manner set out in this Part.

1.2 The Traffic Scotland Service

1.2.1 The Traffic Scotland Service was established by the Scottish Ministers to support the delivery of the Scottish Government's purpose of sustainable economic growth. In this regard the specific objectives of the Traffic Scotland Service are to:

(i) improve journey time reliability,

(ii) reduce disruption caused by Incidents, roadworks and events,

(iii) minimise the effects of congestion by the provision of alternative route advice,

(iv) allow travellers to make informed decisions concerning route, time and means of transport by the provision of credible and accurate travel information, and

(v) improve safety and security for travellers.

1.2.2 The management of the Traffic Scotland Service is undertaken by Transport Scotland's Network Operations team who form part of the Transport Scotland's Trunk Roads and Bus Operations Directorate. The Traffic Scotland Service is delivered through the Traffic Scotland Operations and Infrastructure Services Contractor on behalf of Transport Scotland.

1.3 The Traffic Scotland Operations and Infrastructure Services Contractor

1.3.1 The Traffic Scotland Operations and Infrastructure Services Contractor delivers the Traffic Scotland Service on behalf of Transport Scotland from the Traffic Scotland National Control Centre. The duties carried out by the Traffic Scotland Operations and Infrastructure Services Contractor include:

(i) Traffic Scotland frontline operations on a 24 hours a day, seven days a week basis,

(ii) the maintenance of Traffic Scotland Equipment including cabling and ducting arrangements,

(iii) the traffic data service,

(iv) facility management of Traffic Scotland's National Control Centre, and

(v) the design, installation and commissioning of new Traffic Scotland infrastructure.

1.3.2 The name, address and contact numbers of the Traffic Scotland Operations and Infrastructure Services Contractor are detailed in Annex 3.7/A of this Part or as otherwise notified to the Operating Company in writing by the Director. The Director will notify the Operating Company in writing of any changes made to the identity and or role of the Traffic Scotland Operations and Infrastructure Services Contractor.

1.3.3 No later than 25 Working Days prior to Commencement of Service Date 1, the Director will issue to the Operating Company in electronic format, an up-to-date inventory of all Traffic Scotland Equipment located on the Trunk Road network within the Unit and or near to the Unit.

The Director will issue a revised inventory to the Operating Company on a quarterly basis from Commencement of Service Date 1 and, in addition, the Director will issue a revised inventory no later than 25 Working Days prior to Commencement of Service Date 2.

1.3.4 The Operating Company shall take a proactive approach in liaison and coordination with the Traffic Scotland Operations and Infrastructure Services Contractor regarding planned roadworks and events and conditions on any route at the relevant time, Incidents and events that impact on the journey time reliability of the Trunk Road network.

1.3.5 The Operating Company shall provide access (such being unrestricted except for any Operating Company procedures with which others must comply whilst on the Unit), and, shall accompany, the Traffic Scotland Operations and Infrastructure Services Contractor to any Traffic Scotland Equipment on the Principal Crossings for the purposes of the inspection and maintenance of such Traffic Scotland Equipment.

1.4 The Traffic Scotland Systems Contractor

1.4.1 The Traffic Scotland Systems Contractor provides, on behalf of the Scottish Ministers, support, maintenance, development and equipment supply services for the Traffic Scotland incident management system, web system, national traffic database system, and internet protocol communication system.

The name, address and contact number of the Traffic Scotland Systems Contractor shall be as referred to in Annex 3.7/A of this Part or as otherwise notified to the Operating Company in writing by the Director. The Director will notify the Operating Company in writing of any changes made to the identity and role of the Traffic Scotland Systems Contractor.

2. CONSULTATION, LIAISON, NOTIFICATION AND COORDINATION REQUIREMENTS RELATING TO NETWORK OPERATIONS SERVICES

2.1 General

2.1.1 The Operating Company shall consult, liaise, notify and coordinate with the Director and the Network Operations service providers as detailed in this Part.

2.1.2 Where the Trunk Road network is not operating within its normal operational conditions, including situations where delays exceed the limits defined in Annex 3.7/F of this Part or an Incident has occurred, the Operating Company shall continually share its knowledge with, and report such conditions and the status of Incidents on the Trunk Road network to, the Traffic Scotland Operations and Infrastructure Services Contractor and the Director. The delay and Incident status knowledge transfer shall be delivered in a continual and consistent manner and the Operating Company shall:

(i) ensure that all its resources both internal and external are aware of the requirement of this knowledge transfer and are able to undertake such communications, and

(ii) prepare documentation and tool box talks to ensure that delay and Incident status knowledge transfer becomes part of the operational culture of the Operating Company.

2.1.3 The Operating Company shall attend at least one meeting with the Director and each of the Network Operations service providers during Mobilisation Period 1. Thereafter the Operating Company shall meet at least quarterly with the Traffic Scotland Operations and Infrastructure Services Contractor to provide feedback, learning and improvements in support of achieving the Director's key objectives and provide continual improvement in the delivery of duties specified within this Part. The Director may require the Operating Company to attend meetings more frequently than quarterly and the Operating Company shall comply with any such request.

2.2 Appointment of Journey Time Reliability Coordinator

2.2.1 The Operating Company shall appoint a suitably qualified person in accordance with the requirements of Schedule 5 Part 4 to deliver the Journey Time Reliability Coordinator role.

2.3 Journey Time Reliability Coordinator's Main Duties

2.3.1 The Journey Time Reliability Coordinator shall be responsible for supporting the Network Manager and Incident Liaison Officers in the delivery of the coordination, liaison and management requirements of the Operating Company specified within this Part, to ensure that the journey time reliability of the Trunk Road network in or near the Unit is maintained at its optimum level.

2.3.2 The Journey Time Reliability Coordinator shall be proactive in gathering relevant information and continuously monitoring the Automated Diary Facility, the SRWR, the Traffic Scotland Service website and other relevant systems to ensure complete knowledge of all roadworks, events and Incidents occurring on or near the Unit.

2.3.3 The Journey Time Reliability Coordinator shall be the first point of contact within the Operating Company for all roadworks undertaken by the Operating Company and events occurring on or near the Unit within and outwith Normal Working Hours. The Journey Time Reliability Coordinator shall be contactable on dedicated landline and mobile phone numbers.

2.3.4 The Journey Time Reliability Coordinator shall undertake periodic site visits to assess the implementation and impact of roadworks and events. Such visits shall be used to assess how improvements in journey time reliability can be made when similar roadworks and events take place in the future.

2.3.5 The Journey Time Reliability Coordinator shall:

(i) liaise and communicate with relevant Operational Partners such to include as a minimum:

(a) the dissemination of accurate and timely information to assist in the effective delivery and coordination of all roadworks and events throughout the Unit,

(b) supporting the Network Manager in ensuring representation by Operating Company personnel at all liaison meetings with the Operational Partners,

(c) supporting the Network Manager in ensuring representation by the Operating Company at seminars or working groups related to improving the methods by which Trunk Road management and maintenance activities shall be carried out, when required by the Director including as a minimum attendance at the Forth Replacement Crossing Traffic Management Working Group meetings,

(d) ensuring that the minutes of all liaison meetings called by the Operating Company are prepared and copies issued to the Director via the Network Manager and relevant Operational Partners, within five Working Days of the meeting taking place, and

(e) ensuring that the issues arising from the liaison meetings are managed in accordance with the requirements of this Contract and that any actions required from the Operating Company are completed within the agreed or required timescales,

(ii) providing a monthly report to the Director via the Network Manager no later than the fifteenth day of each calendar month until the Service End Date of:

(a) liaison meetings held,

(b) issues arising from such liaison meetings,

(c) actions taken or to be taken arising from such liaison meetings,

(d) action plans agreed between the Operating Company and the Director and or Operational Partner, and

(e) the impacts of the Operating Company's activities on the journey time reliability of the Trunk Road network with recommendations for proposed improvements,

(iii) preparing and submitting reports annually to the Director via the Network Manager, detailing the impacts of all the Operating Company's activities on the journey time reliability of the Trunk Road network including as a minimum any proposed improvements and mitigation measures,

(iv) ownership and management of the Automated Diary Facility ensuring that it is fully functional and kept updated at all times,

(v) ensuring that all parties requiring the use of the Traffic Scotland Service are provided with a unique roadworks reference from the Automated Diary Facility to quote when contacting the Traffic Scotland Operations and Infrastructure Services Contractor,

(vi) ensuring the necessary temporary traffic regulation order is in place before requesting the Traffic Scotland Operations and Infrastructure Services Contractor to implement roadworks settings to support the roadworks,

(vii) when the appropriate functionality becomes available in the Automated Diary Facility, entering the temporary traffic regulation order reference,

(viii) coordinating, monitoring and controlling all roadworks or events to minimise road closures, potential impacts and conflicts and maximising the capacity of the Trunk Road network, using the Automated Diary Facility and SRWR as appropriate,

(ix) disseminating accurate and timely information to Operational Partners via the Automated Diary Facility, emails, regular meetings and telephone calls to assist in the effective coordination of their activities,

(x) implementing escalation procedures for roadworks and events which exceed allowable delay thresholds,

(xi) liaising with the Incident Liaison Officers and relevant Operational Partners in dealing with Incidents occurring during roadworks including as a minimum coordination of the activation and implementation of Standard Incident Diversion Routes and managing the cancellation of roadworks if such cancellation will improve the capacity of the Trunk Road network when an Incident is taking place,

(xii) utilising and managing support personnel on specific tasks relating to the planning and implementation of roadworks or events including as a minimum ensuring such personnel are provided with adequate communications equipment, coordinating, mobilising, deploying and supervising traffic management arrangements and evaluating their impacts,

(xiii) notifying the Director via the Network Manager promptly in writing of operational conflicts that may impact on the journey time reliability of the Trunk Road network and coordinating the implementation of any corrective action consented to by the Director with the Traffic Scotland Operations and Infrastructure Services Contractor,

(xiv) coordinating the programming, planning and installation of traffic management and traffic control equipment in relation to the roadworks undertaken by the Operating Company to ensure the safety of Operating Company operational staff and Trunk Road users,

(xv) maintaining a record of all traffic management installations, including as a minimum mobile lane closures on the Unit for each day of each Annual Period on a central database maintained by the Operating Company and ensuring that all updates are completed by 09.30 hours on the following Working Day,

(xvi) management and dissemination of information required by the Operating Company and others for the preparation of Temporary Traffic Regulation Orders for roadworks and Special Events in accordance with the Specification, and

(xvii) liaise with relevant Operational Partners to ensure the Operating Company's procedures and working practices when carrying out Operations on the Unit are fully compatible with the Traffic Scotland Operations and

Infrastructure Services Contractor's operational procedures for the public transport corridor.

2.4 **Specialist Contractors Appointed by Network Operations**

2.4.1 The Director has appointed a number of Network Operations service providers to undertake routine maintenance and emergency repair of Network Operations equipment and to undertake the design and construction of new Network Operations equipment. The Operating Company shall liaise and coordinate regularly with all Network Operations service providers to minimise the impact of Operations or work on the Network Operations equipment and journey time reliability of the Trunk Road network. The Operating Company shall facilitate Network Operations service providers' access to its planned maintenance schedules so that Network Operations service providers can plan work to coordinate with planned Operating Company maintenance activities.

2.5 **Proposed Operations or Works Contract or Works in the vicinity of Network Operations Equipment**

2.5.1 When:

(i) the Operating Company proposes to carry out Operations or a Works Contract within or adjacent to locations containing Network Operations equipment, or

(ii) the Operating Company becomes aware of authorised contractors, Undertakers or others proposing to carry out work within or adjacent to locations containing Network Operation equipment,

the Operating Company shall communicate with the Director and the appropriate Network Operations service providers as if the Network Operations service provider was an Undertaker as defined in the *New Roads And Street Works Act 1991*.

2.6 **Proposed Operations or Works Contract or Works affecting Network Operations Equipment**

2.6.1 When:

(i) the Operating Company proposes to undertake any Operations or a Works Contract that may have a physical effect on any Network Operations equipment, or

(ii) the Operating Company becomes aware of authorised contractors, Undertakers or others proposing to carry out work that may have a physical effect on any Network Operations equipment,

the Operating Company shall notify the appropriate Network Operations service provider by completing and submitting the form provided at Annex 3.7/B of this Part via e-mail at least 15 Working Days prior to the Operations, Works Contract or work commencing. The completion and submission of the form shall be in addition to all planning of relocation, design of relocation and consultation with the Director which the Operating Company shall undertake when it commences any planning of Operations, Works Contract or work that will impact on Network Operations equipment, as detailed in paragraph 2.6.4 of this Part.

2.6.2 Where the Operating Company deems that such Operations, Works Contracts or work shall have no physical effect on any Network Operations equipment, the form shall be submitted to show a nil return.

2.6.3 Where Operations or Works Contracts undertaken by the Operating Company involve the submission of a Statement of Intent and a Value for Money Assessment, these shall include reference to any work required at the Network Operations equipment site.

Where a Statement of Intent and Value for Money Assessment identifies that Network Operations equipment may be affected, a copy of the Statement of Intent and Value for Money Assessment shall be issued simultaneously to the appropriate Network Operations service provider and the Director.

2.6.4 The Operating Company shall consult and liaise with the Director and the appropriate Network Operations service provider regarding the nature of the Operations or Works Contract and, subject to paragraph 2.6.5 of this Part, shall make arrangements for the affected Network Operations equipment to be relocated, replaced or renewed. Such arrangements shall include as a minimum detailed planning and design of works to accommodate the diversion and relocation of Network Operations equipment.

2.6.5 The Operating Company shall only undertake the planning, design, diversion, relocation and renewal of the Network Operations equipment where it demonstrates to the satisfaction of the Director that it has the skills and competence to undertake such work and the Director has consented in writing to the Operating Company undertaking such work. Where such consent has been received the Operating Company shall undertake and complete this work as an integral part of the Operations or Works Contract and shall:

(i) complete the planning and design of the diversion, relocation or renewal of Network Operations equipment as part of the planning and design of the Operations or Works Contract in consultation with the Director and the relevant Network Operations service provider,

(ii) complete any diversion and relocation of Network Operations equipment in advance of, or during, the Operations or Works Contract as appropriate,

(iii) when the Operations include road surfacing, ensure that Network Operations surface detection equipment is replaced and operational as part of the Operations or Works Contract or, if consented to in writing by the Director, within seven Working Days of the surface course being laid, and

(iv) undertake all relevant and statutory testing of Network Operations equipment and the provision of records to enable the Director and the Network Operations service providers to maintain the relevant Health and Safety File and *New Roads and Street Works Act 1991* records.

Testing shall take place as an integral part of the Operations or Works Contract and the Records shall be provided within 10 Working Days of the completion of Operations or Works Contract adjacent to the Network Operations equipment. If the Operating Company fails to provide the necessary Records within 25 Working Days of such completion, the Director will arrange for the relevant Network Operations service provider to undertake any tests and investigations necessary to prepare and provide all such Records. Any additional costs incurred by either the Network Operations service provider and or the Director in having to undertake such tests and investigations shall be borne by the Operating Company. Such costs shall be deducted from the next payment or any subsequent payment due to the Operating Company pursuant to the other provisions of this Contract or, at the option of the

Director, shall be recoverable from the Operating Company as a debt due to the Scottish Ministers.

2.6.6 The Operating Company shall ensure that any affected Network Operations equipment is replaced as part of the Operations or Works Contract in accordance with specifications that will be supplied by the Director.

2.6.7 Where the Director does not consent to the Operating Company undertaking the diversion, relocation or replacement of the Network Operations equipment or any part of the work required, the Operating Company shall liaise with the Director and the relevant Network Operations service provider in the planning of the work to ensure that the completion of such work complies with the timescales agreed as part of the planning of the work and any other timescale as referred to in this Part.

2.6.8 When Works that affect or may affect Network Operations equipment are to be undertaken under a Works Contract, the Operating Company shall include within the Works Contract a requirement for:

(i) the Works Contractor to give notice in accordance with the timescales referred to in this Part, and

(ii) the Network Operations equipment to be diverted, relocated or replaced as part of the Works Contract within the previously planned timescales provided that the relevant Works Contractor can demonstrate to the Director that it has the skills and competence to undertake such work and the Director has consented in writing to the relevant Works Contractor undertaking such work.

2.6.9 When work that affects or may affect Network Operations equipment is to be undertaken by authorised contractors, Undertakers or others, the Operating Company shall:

(i) on receiving notice of the work from the authorised contractor, Undertaker or others, notify the Director and the appropriate Network Operations service provider in writing of the proposed work, and

(ii) make arrangements with the authorised contractor, Undertaker or others for the Network Operations equipment to be diverted, relocated or replaced as part of the work within the previously planned timescales.

In such circumstances, the Director reserves the right to nominate Network Operations service providers to undertake the diversion, relocation or replacement of the Network Operations equipment.

2.7 Proposed Operations or Works Contract or Work Relating to New Network Operations Equipment

2.7.1 Where the Operating Company proposes a location for any new Network Operations equipment which may be required within the Unit, the Operating Company shall complete the form provided at Annex 3.7/C of this Part and submit it via e-mail to the Director who will either consent to the proposed location or suggest revisions to the Operation Company. The Operating Company shall liaise and consult further until the Director consents to the revised location.

Where the Network Operations service provider agrees to the Operating Company undertaking the installation of the new Network Operations equipment, the Operating Company shall undertake this work as part of the Operations in

accordance with the requirements of this Part and the specification provided by the Director. Where the Director does not consent to the Operating Company undertaking this installation work, the Director will arrange for the Network Operations service provider(s) to undertake such work and the Operating Company shall provide any information and support requested by the Director to the Network Operations service provider(s).

2.8 Damage to Network Operations Equipment

2.8.1 The Operating Company shall ensure that it is aware of situations where Network Operations equipment is or may be susceptible to damage from Operations or from Works Contracts and shall ensure that all suitable precautions are taken to prevent damage to such equipment. Such situations shall include as a minimum edge drainage works where the wiring from detector loops to cabinets may be damaged.

2.8.2 Where the Operating Company causes damage, suspects that it, or its subcontractors or a Works Contractor may have caused damage, or becomes aware of any external activities that may have caused damage to Network Operations equipment, it shall immediately inform the appropriate Network Operations service provider by telephone, providing an indication of what damage has occurred. The Operating Company shall subsequently complete the form provided at Annex 3.7/D of this Part and submit it to the Network Operations service provider via e-mail within 24 hours of the damage being caused or identified.

2.8.3 When instructed by the Director, either the Operating Company or Network Operations service provider shall undertake repair of the damage at the earliest possible time.

When such a repair is temporary, the Operating Company shall liaise with the Director and the relevant Network Operations service provider regarding the nature of the damage and make arrangements for the Network Operations equipment to be repaired or replaced by either the Network Operations service provider or the Operating Company.

When such a repair is permanent, the Operating Company shall undertake the permanent repair in accordance with paragraph 2.6 of this Part. The timescales for completion of the permanent repair shall be agreed with the Director but shall usually be within 25 Working Days to 75 Working Days from the date of the initial damage. If the Operating Company fails to complete the permanent repair within the agreed timescales, the Director will arrange for the Network Operations service provider to undertake the repair. All costs associated with such repair shall be borne by the Operating Company. Such costs shall be deducted from the next payment or any subsequent payment due to the Operating Company pursuant to the other provisions of this Contract or, at the option of the Director, shall be recoverable from the Operating Company as a debt due to the Scottish Ministers.

3. SPECIFIC REQUIREMENTS RELATING TO THE TRAFFIC SCOTLAND SERVICE

3.1 The Automated Diary Facility

3.1.1 The Traffic Scotland Operations and Infrastructure Services Contractor requires complete knowledge of:

(i) all planned and emergency Operations, works, traffic management, closures of Lanes and occupations of Lanes, which for the purposes of this

Part only shall be called 'roadworks', whether such roadworks are undertaken by the Operating Company, Works Contractor, Undertaker, authorised contractor or others, and

(ii) all Special Events expected to attract a minimum of 3,000 attendees, such including as a minimum, concerts, sporting events and seasonal events which are likely to generate significant traffic.

3.1.2 The Operating Company shall use the Automated Diary Facility for providing information to the Traffic Scotland Operations and Infrastructure Services Contractor when:

(i) the Operating Company proposes to undertake any Operations or Works Contracts, or

(ii) the Operating Company becomes aware of authorised contractors, Undertakers or others proposing to carry out any work.

3.1.3 The Operating Company shall be responsible for ensuring that all information held in the Automated Diary Facility is accurate, complete and up to date at all times to enable the Traffic Scotland Operations and Infrastructure Services Contractor to deliver reliable information to customers.

3.1.4 The Operating Company shall monitor both the Automated Diary Facility and SRWR to determine if there are any other roadworks scheduled or in progress by any Works Contractor, Undertaker, authorised contractor or others that may impact on the implementation of any proposed roadworks. Where other roadworks are identified as having such a potential impact, the Operating Company shall coordinate these roadworks to minimise potential impacts or mitigate against conflicts with the proposed implementation programme.

3.2 Access to the Automated Diary Facility

3.2.1 No later than 25 Working Days prior to Commencement of Service Date 1, the Operating Company shall provide and maintain at the Central Office a broadband internet connection for access to the Automated Diary Facility.

3.2.2 Prior to ordering this connection, the Operating Company shall contact the Director to confirm the Director's exact requirements.

3.3 Information to be Logged on the Automated Diary Facility

3.3.1 The Operating Company shall ensure that details of all roadworks undertaken within the Unit are logged onto the Automated Diary Facility and kept updated at all times. Each item logged shall be allocated a unique referencing number which shall be quoted by the Operating Company in all communications with Traffic Scotland Operations and Infrastructure Services Contractor and within its own organisation and by its subcontractors.

3.3.2 The information supplied by the Operating Company via the Automated Diary Facility shall allow Traffic Scotland Operations and Infrastructure Services Contractor to create messages on the Traffic Scotland variable message signs, informing road users of potential delays and of alternative routes where applicable.

3.3.3 The Traffic Scotland Service website shall serve as the single, reliable source for information on all events. The Operating Company shall ensure that the Traffic Scotland Service website is monitored on a daily basis to obtain information on

forthcoming events that need to be incorporated into the planning of Operations or Works Contracts.

3.3.4 The Operating Company shall ensure that details of Special Events expected to attract fewer than 3,000 attendees, but deemed by the Operating Company to have potential to cause significant delays, are logged on the Automated Diary Facility and kept updated at all times. The Operating Company shall use the Network Access Form at Annex 3.7/E of this Part to request roadworks information from Works Contractors, authorised contractors, Undertakers and others with a right to work within the Unit, to ensure accurate and consistent information is utilised to meet the obligations of this Part. This information shall then be logged on the roadworks diary of the Automated Diary Facility for each roadworks event.

3.3.5 The Operating Company shall ensure all details logged into the Automated Diary Facility are reviewed and updated no later than 09.30 hours daily. Where the Operating Company becomes aware of any significant change to such details, it shall ensure the Automated Diary Facility is updated within one hour of becoming aware.

3.4 Access to Closed Circuit Television Cameras

3.4.1 The Director will make arrangements to provide access to closed circuit television cameras to the Operating Company at the locations agreed between the Director and the Operating Company.

3.5 Assessment of Roadworks Delays

3.5.1 Roadworks or any other activity being undertaken by the Operating Company, FCBC or authorised contractors, Undertakers or others, which reduce the operational capacity of the Trunk Road network on or near the Unit shall require an assessment by the Operating Company prior to commencement to assess the impact of the reduction in capacity. To assist the Operating Company in carrying out assessments the Director will provide the delay modelling tool described in Annex 3.7/G of this Part. Where the Operating Company or the Director are of the opinion that a particular scenario cannot be accurately assessed by the delay modelling tool then the Operating Company shall carry out a more detailed analysis. The Director's consent will be required to the method and more detailed analysis to be used.

3.5.2 The Operating Company shall undertake reduction in capacity assessments for the full duration of any activity that reduces the operational capacity of the Trunk Road network on or near the Unit and each assessment shall include the unique reference number as described in paragraph 3.3.1 of this Part.

3.5.3 The Operating Company shall not assess roadworks relating to emergency repairs prior to commencement but shall assess such roadworks on the next Working Day after implementation.

3.5.4 Where activities that reduce the operational capacity of the Trunk Road network on or near the Unit are proposed that have been assessed as likely to cause traffic delays below the acceptable delay thresholds detailed in Annex 3.7/F of this Part, Operating Company shall implement such activities following the normal notification period.

3.5.5 The Operating Company shall record each delay assessment in the Automated Diary Facility.

3.5.6 Where activities that reduce operational capacity are proposed which have been assessed as likely to cause traffic delays greater than the acceptable delay threshold of 12 minutes as detailed in Annex 3.7/F of this Part, the Operating Company shall implement such activities only following receipt of consent from the Director. To allow the Director to determine if consent can be given, the Operating Company shall prepare a delay management report detailing justification for implementing activities that will cause delay greater than the acceptable delay threshold of 12 minutes. The delay management report shall include as a minimum:

(i) activity location and description,

(ii) result of initial impact assessment,

(iii) data collection and modelling approach where modelling beyond the use of the delay modelling tool has been consented to by the Director, and

(iv) description of existing and expected operational condition of that part of the Trunk Road network on or near the Unit affected by the proposed activity, with a summary of recommendations for measures to be applied to reduce delay.

3.5.7 The Operating Company shall notify the Traffic Scotland Operations and Infrastructure Services Contractor at least 25 Working Days prior to the commencement of the activity when the estimated delay is greater than eight minutes.

3.5.8 Complex roadworks refer to situations where specific work activities and time periods may make it impossible to meet the delay thresholds detailed in Annex 3.7/F of this Part. Conditions where this may occur include as a minimum:

(i) roadworks located in areas where the existing Trunk Road is operating at or near capacity but where the existing traffic flow is relatively stable. At such locations, a slight reduction in capacity resulting from roadworks activities could have a significant impact on road users,

(ii) roadworks where closures of Lanes are required to preserve the safety of road users and Operating Company personnel or for environmental reasons, and

(iii) roadworks being undertaken during periods of high traffic volume related to seasonal traffic, holidays and events.

For activities that may cause delay beyond the 12 minute delay threshold detailed in Annex 3.7/F of this Part the Operating Company may propose the use of microscopic simulation models for the Director's consent.

3.5.9 When the Operating Company identifies an implementation option that reduces predicted delays below the 12 minute delay thresholds detailed in Annex 3.7/F of this Part, this implementation option shall be used by the Operating Company.

3.6 Notification of Roadworks Delays

3.6.1 Where roadworks are being undertaken which have been assessed as likely to cause traffic delays in excess of thresholds detailed in Annex 3.7/F of this Part, or which involve the closure of an off-slip or on-slip road, the Operating Company shall keep the Traffic Scotland Operations and Infrastructure Services Contractor notified of traffic delays via regular telephone calls, quoting the unique Automated Diary Facility reference number for the Site, at the following intervals:

(i) at code 3 and 4 delays, 15 minutes prior to traffic management commencing at a roadworks location,

(ii) immediately when delays to traffic, assessed using the delay modelling tool, exceed 10 minutes,

(iii) thereafter at no more than 30 minutes intervals or when delay changes of five minutes or more occur, giving details of the delay times until they have ceased to exceed 10 minutes, and

(iv) immediately once the traffic management has been removed from a roadworks location.

3.6.2 The Operating Company shall notify the Traffic Scotland Operations and Infrastructure Services Contractor by telephone and update the Automated Diary Facility within one hour of becoming aware of changed circumstances which would significantly affect movement of traffic, including as a minimum:

(i) when roadworks which were coded 1 to 2 in accordance with 'Coding for estimated traffic delays' detailed in Annex 3.7/F of this Part are causing traffic delays in excess of 10 minutes,

(ii) when planned roadworks are cancelled at short notice and the cancellation has not yet been entered into the Automated Diary Facility,

(iii) Incidents that have been notified to, or identified by, the Operating Company, and

(iv) when road, closures or Lanes or slip closures or occupations of Lanes have been, or are likely to be, put in place.

3.7 Monitoring and Evaluation

3.7.1 To facilitate learning and feedback from the implementation of roadworks, the Operating Company shall monitor and evaluate predicted and actual delays. If the actual delay exceeds the predicted delay by any period greater than five minutes, the Operating Company shall include within the Automated Diary Facility actual delays for all code 4 works and for all codes of works designated in accordance with the 'Coding for estimated traffic delays' provided in Annex 3.7/F of this Part.

3.7.2 If necessary, the Operating Company shall utilise equipment which can automatically determine traffic delays through roadworks and disseminate appropriate messages to the Traffic Scotland Operations and Infrastructure Services Contractor. Where the Operating Company considers the use of automatic traffic delay monitoring equipment necessary, it shall submit written proposals for the deployment of such equipment to the Director for consent. Where the Operating Company considers the use of automatic traffic delay monitoring equipment is not feasible, it shall instead deploy sufficient operational personnel to monitor traffic delays.

3.7.3 Where the actual traffic delays exceed the predicted traffic delays by any period greater than 15 minutes, the Operating Company shall immediately notify the Traffic Scotland Operations and Infrastructure Services Contractor and the Director. The Operating Company Network Manager shall provide details of the discrepancy between the predicted and actual delays and propose suitable on site corrective actions and shall keep the Director and Traffic Scotland Operations and Infrastructure Services Contractor briefed on the status of such roadworks.

3.7.4 The Director may require the Operating Company to implement proposed corrective actions or suspend the implementation of roadworks in order to reduce traffic delays which he considers unacceptable. Where the suspension of roadworks due to unacceptable travel delays would have a negative impact on the safety of road users, the Director may allow the implementation of roadworks to continue until the Operating Company has resolved the negative impact by taking the necessary corrective actions. The Operating Company shall notify and liaise with the Traffic Scotland Operations and Infrastructure Services Contractor in either situation.

3.8 Vehicle Activated Signs

3.8.1 The Operating Company shall provide and use vehicle activated signs during roadworks where such use will address safety issues relating to inappropriate speeds subject to obtaining the Director's consent to the usage of such. The Operating Company requests for consent to the use of vehicle activated signs shall be made in writing to the Director.

3.8.2 Vehicle activated signs shall only be deployed in addition to regulatory signs as a response to excessive speed and in accordance with the following requirements:

(i) the *Traffic Signs Regulations and General Directions 2002* and other relevant United Kingdom and European Union guidance and standards. Departures shall not be permitted unless specifically consented to by the Director,

(ii) be of a type consented to by the Director for use on the Trunk Road network, and shall utilise only the legends consented to by the Director,

(iii) not be deployed where the works are located within those sections of the Trunk Road network that already have Lane control signalling,

(iv) where both directions within the roadworks area meet the criteria of this paragraph, one vehicle activated sign shall be deployed in each direction, and

(v) be deployed where detailed accident investigation or risk assessment confirms that vehicle activated signs are an appropriate remedial measure.

3.8.3 Speed monitoring detectors shall be installed accurately to minimise errors in speed measurement.

3.8.4 When the signs are activated, the displays shall provide appropriate warning to motorists when the assigned speed limit is exceeded and shall not interfere with the visibility and general effectiveness of any other signs in the area.

3.9 Mobile Variable Message Signs

3.9.1 Traffic Scotland Equipment includes a network of permanently located variable message signs positioned at key locations throughout the Trunk Road network. These signs facilitate the provision of real time information to Trunk Road users.

3.9.2 The Scottish Ministers own a number of mobile variable message signs. These shall be made available for use by the Operating Company in advance of, or during, any major works or Operations in areas which are out with the coverage of the permanent variable message sign system forming part of the Traffic Scotland Equipment.

3.9.3 Where the Operating Company requires the use of the mobile variable message signs, the Operating Company shall apply in writing to the Traffic Scotland Operations and Infrastructure Services Contractor for consent to use these, giving as much notice as possible. The Traffic Scotland Operations and Infrastructure Services Contractor shall have absolute discretion to decide when the use of the mobile variable message signs is allowed, based on the perceived benefits to road users.

3.9.4 Where the Traffic Scotland Operations and Infrastructure Services Contractor gives written consent to the use of mobile variable message signs, the responsibilities of the Operating Company shall be as specified within the *Use Of Mobile Variable Message Signs On The Trunk Road Network* guidance.

3.9.5 In accordance with this guidance, the Transport Scotland mobile variable message signs shall be used by the Operating Company to cover situations including:

(i) the signing of major roadworks where there are currently no permanent variable message signs,

(ii) gauging driver reaction to the potential benefits of permanently locating a variable message sign at that position on the Unit,

(iii) providing weather related information during the winter months, such as snowfalls which have the potential to require road closures or seriously affect traffic travelling these routes, and

(iv) signing for large scale outdoor events that generate abnormally high levels of traffic in otherwise quiet areas for short periods such as pop concerts and sporting events.

3.9.6 The Operating Company shall be responsible for:

(i) the collection and return of the signs in good working order by arrangement with the Traffic Scotland Operations and Infrastructure Services Contractor, and

(ii) the provision of suitable locations for the signs, which shall include as a minimum:

(a) hard standing, including adequate maintenance access to the sign once deployed,

(b) protection for the signs by an existing permanent barrier or by a temporary barrier, including assessment of the site to ensure compliance with TD19/06 of the *Design Manual for Roads and Bridges* and any other road safety related matters,

(c) a 230 volts, 50Hz power supply facility complete with appropriate methods of connecting to the mobile variable message signs, including provision of certification to British Standard 7671, which shall be provided prior to connection of the sign,

(d) where it is not possible to provide a mains power supply facility, the Operating Company shall be responsible for the provision of a suitable generator, including the supply of fuel, maintenance, security and all necessary servicing when using signs with a generator, and

(e) visual inspection of the sign and its immediate environs and reporting of any defects to the appropriate parties during their operation.

3.10 Before-and-After Traffic Counts

3.10.1 Certain road improvement Schemes require to be supported by before-and-after traffic counts.

When the Operating Company proposes the location of any new traffic counting site required for undertaking before-and-after studies, the Operating Company shall complete the form provided at Annex 3.7/C of this Part and submit it to the Director and the Traffic Scotland Operations and Infrastructure Services Contractor via e-mail. The Operating Company shall obtain the written consent of the Director before such before-and-after studies are undertaken.

3.10.2 Where the Director consents to the Operating Company undertaking the deployment of the proposed new traffic counting equipment, the Operating Company shall undertake this work as an integral part of the Operations or Works Contract in accordance with the requirements of this Part and the specification provided by the Director. Where the Director does not consent to the Operating Company undertaking this installation work, the Director will arrange for the Network Operations service provider(s) to undertake such work and the Operating Company shall provide any information and support requested by the Director to the Network Operations service provider(s).

4. SPECIFIC REQUIREMENTS RELATING TO THE FORTH ROAD BRIDGE

4.1 Intelligent Transport Systems Equipment

4.1.1 The Operating Company shall be responsible for the operation, inspection and maintenance of the intelligent transport systems equipment listed in Annex 3.7/H of this Part from Commencement of Service Date 1. The Operating Company shall carry out maintenance and inspections on the intelligent transport systems listed in accordance with the manufacturer's requirements. The Operating Company shall provide 30 days prior to Commencement of Service Date 2 an inventory of intelligent transport systems equipment in liaison with the Director and the Traffic Scotland Operations and Infrastructure Services Contractor which will detail the assets to be passed over to the Traffic Scotland Operations and Infrastructure Services Contractor as determined by the Director. The Traffic Scotland Operations and Infrastructure Services Contractor will take over the operation, management and maintenance of the assets listed in the inventory from Commencement of Service Date 2. The Operating Company shall undertake all such work as is required for the migration of these assets on to the Traffic Scotland Service system.

This is Annex 3.7/A to Schedule 3 Part 7 referred to in the foregoing Agreement between Scottish Ministers and Amey LG Limited.

SCOTTISH MINISTERS' REQUIREMENTS

SCHEDULE 3 PART 7

NETWORK OPERATIONS SERVICES

ANNEX 3.7/A– CONTACT LIST OF NETWORK OPERATIONS SERVICE PROVIDERS

SCOTTISH MINISTERS' REQUIREMENTS

SCHEDULE 3 PART 7

NETWORK OPERATIONS SERVICES

ANNEX 3.7/A– Contact List of Network Operations Service Providers

Group A - Main Network Operations Service Provider

Traffic Scotland Operations and Infrastructure Services Contractor

AMEY OW Ltd
Precision House
Off McNeil Drive
Eurocentral
ML1 4UR

Group B – Other Network Operations Service Providers working on the Trunk Road

Traffic Scotland Systems Contractor - the Traffic Scotland Systems Contractor will be in place before or during this contract. The current Network Operations service providers carrying out a systems support role are:

IBI Group
The Athenaeum Building
8 Nelson Mandela Place
Glasgow
G2 1BT
Tel 0141 331 4500
Contact – Graeme Scott

Cubic (ITMS Ltd)Cavendish House
Prince's Wharf
Thornaby
Stockton-On-Tees
Cleveland
TS17 6QY
Tel 0164 263 6700
Contact – Russ Taylor

This is Annex 3.7/B to Schedule 3 Part 7 referred to in the foregoing Agreement between Scottish Ministers and Amey LG Limited.

SCOTTISH MINISTERS' REQUIREMENTS

SCHEDULE 3 PART 7

NETWORK OPERATIONS SERVICES

ANNEX 3.7/B – NOTIFICATION OF PLANNED OPERATIONS AND WORKS CONTRACTS AND WORK IN THE VICINITY OF NETWORK OPERATIONS EQUIPMENT

SCOTTISH MINISTERS' REQUIREMENTS

SCHEDULE 3 PART 7

NETWORK OPERATIONS SERVICES

ANNEX 3.7/B – Notification of Planned Operations and Works Contracts and Work in the Vicinity of Network Operations Equipment

Notification of Fixed Network Operation site events	Sheet Ref		(to be continuous with previous sheets – e.g. 2006/12):
	Date:		(date when sheet submitted)
	Name:		(of individual responsible for sheet contents)
	Unit:		(Forth Bridges Unit)

Site Reference (A)	Date (from) (B)	(Date to) (C)	Provisional or Confirmed (D)	Event Details (E)	Remedial Actions Carried Out or Required (F)	Network Operations Acknowledged (Date / Initials) (G)	Additional Information (H)

Column Notes:

A References must be those contained within the inventory information.

B If the Operations, Works Contract or work takes place on a single day then insert that date here, otherwise start of event.

C If B does not reflect a single day then insert finish date here.

D Indicate if dates are provisional or confirmed.

E Type of Operations, Works Contract or work to be derived from the digits set:

Digit 1

1. Operations or Works Contracts.
2. Accident or Incident.
3. Other events.

Digit 2

A: Works by Works Contractor.

B: Work by authorised contractor.

C: Work by Undertaker.

D: Work by other.

F To include any Operations, Works Contract or work carried out to make situation safe and proposals for any necessary repairs or modifications to, or at, the Network Operations sites.

G Network Operations service provider to acknowledge receipt of this form.

H Any additional comments as appropriate.

This is Annex 3.7/C to Schedule 3 Part 7 referred to in the foregoing Agreement between Scottish Ministers and Amey LG Limited.

SCOTTISH MINISTERS' REQUIREMENTS

SCHEDULE 3 PART 7

NETWORK OPERATIONS SERVICES

ANNEX 3.7/C – NOTIFICATION OF PROPOSED NEW NETWORK OPERATIONS SERVICES SITES

SCOTTISH MINISTERS' REQUIREMENTS

SCHEDULE 3 PART 7

NETWORK OPERATIONS SERVICES

ANNEX 3.7/C – Notification of Proposed New Network Operations Services Sites

Date:		(date when sheet supplied)
Name:		(of individual responsible for sheet contents)
Unit:		(Forth Bridges Unit)

Route (A)	Scheme Name (B)	Start Date (C)	End Date (D)	Approx Value (E)	Brief Description of Scheme (F)	Proposed Site Location (G)	Proposed Site Type (H)

General Notes

1 Use this form to record any proposals for the creation of new Network Operations services sites.

2 Use one line for each proposed site.

General Notes

A e.g. M90.

B The name by which the Operations or Works Contract is known within this Contract.

C Dates can be approximate.

D Dates can be approximate.

E For example, whether resurfacing or road realignment, etcetera. If appropriate, sketches may be supplied to make Scheme type clear.

F This can be either by description or by Ordnance Survey Grid Reference - if appropriate, sketches may be supplied.

G This should specify the equipment type, for example, with traffic counting sites, whether volumetric or classifier.

This is Annex 3.7/D to Schedule 3 Part 7 referred to in the foregoing Agreement between Scottish Ministers and Amey LG Limited.

SCOTTISH MINISTERS' REQUIREMENTS

SCHEDULE 3 PART 7

NETWORK OPERATIONS SERVICES

ANNEX 3.7/D – NOTICE TO NETWORK OPERATIONS SERVICE PROVIDER OF DAMAGE OR SUSPECTED DAMAGE TO NETWORK OPERATIONS EQUIPMENT

SCOTTISH MINISTERS' REQUIREMENTS

SCHEDULE 3 PART 7

NETWORK OPERATIONS SERVICES

ANNEX 3.7/D – Notice to Network Operations Service Provider of Damage or Suspected Damage to Network Operations Equipment

Notice to Network operations providers of damage/suspected damage to Network operations equipment	**Sheet Ref:**		(to be continuous with previous sheets - e.g. 2004/12)
	Date:		(date when sheet submitted)
	Name:		(of individual responsible for sheet contents)
	Unit:		(Forth Bridges Unit)

Site Reference (A)	Date (s) damage occurred/identified (B)	Details (C)	Operation/ Works/ work Type(D)	Organisation which caused damage (if known) (E)	Additional Notes (F)

Column Notes:

A References must be those contained within the inventory information.

B Insert the date when the damage occurred or the date the damage was identified – indicate which is applicable.

C Details of the damage and effects of the damage.

D Insert details of the cause of the damage (if known).

E Name and contact details of organisation which caused the damage (if known).

F To include all relevant details not covered elsewhere in the form – to include contact details in all cases.

Use separate additional sheets if required, but make reference to them here.

This is Annex 3.7/E to Schedule 3 Part 7 referred to in the foregoing Agreement between Scottish Ministers and Amey LG Limited.

SCOTTISH MINISTERS' REQUIREMENTS

SCHEDULE 3 PART 7

NETWORK OPERATIONS SERVICES

ANNEX 3.7/E – NETWORK ACCESS FORM FOR THE REQUEST OF INFORMATION ON PLANNED OPERATIONS, WORKS CONTRACTS, WORKS AND EVENTS FROM UTILITIES AND OTHER THIRD PARTIES

SCOTTISH MINISTERS' REQUIREMENTS

SCHEDULE 3 PART 7

NETWORK OPERATIONS SERVICES

ANNEX 3.7/E – Network Access Form for the Request of Information on Planned Operations, Works Contracts, Works and Events from Utilities and Other Third Parties

Input Operating Company references and logo in this area (Document, Issue, Related To, Page No. etc.)

Before completing this form, please read the conditions and general requirements for applicants wishing to carry out work on the network.

Documents required with application	Req	Rec'd	App'd	Sign'd
Location Plan				
Site Specific TM layout				
SRWR ref				
Road Opening Permit				
Planning Consent Approval				
TM Method Statement				

Unit	
Ref No.	
SRWR Ref No.	
Depot (if applicable)	

Applicant / Originator of Works:														
Traffic Management Contractor:														
Contractor for the Works:														
Contractor Address:									**Head Office Tel:**					
									Site Contact Tel:					
									Contractor 24hr Tel:					
									Traffic Man. 24hr Tel:					
Contractor Email Address:														
Route No.:														
Location:														
OS Start	**E**							**N**						
OS End	**E**							**N**						
OS Centre Point (if applicable)	**E**							**N**						
Start Section (7 digits)														
End Section (7 digits)														
Chainage Start******														
Chainage End******														
List sections affected from start to finish														
Description of Works (include direction)														

Works Supervisor Details:								
Contact No. for Works Supervisor:								
Lane Occupation Start Date:					**Lane Occupation End Date:**			
Working Days	**Mon**	**Tue**	**Wed**	**Thu**	**Fri**	**Sat**	**Sun**	
Lane Occupation Start Time*								
Lane Occupation End Time*								
Closure Type:**								

Lanes Closed*:**	
Speed Limit on Road / Proposed Speed Limit:	
Works Method Statement:	**Health & Safety Plan:**
Consultation with Local Authorities, Police etc:	
Is Traffic Order required? (If Yes, approval is conditional):	
Expected Delays****	

Notes

Access will only be granted on condition that the Traffic Scotland Operations and Infrastructure Services Contractor is informed by telephone (0131 203 8700) 15 minutes prior to the first cone being placed on the network and again when all traffic management has been lifted.

* Time Restrictions may apply
** Standard or Relaxation – See Chapter 8 – Traffic Sign Manual

*** L1, L2, L3, slip lane, hardshoulder, lay-by or verge

**** To be completed by the Journey Time Reliability Coordinators

***** Relative to the start of that section

Operating Company Response
Approval - Yes / No:
Signed:
Title:
Date:

Required for Automated Diary Facility

Required for OC Audit trail

Add to Automated Diary Facility for OC & TS info

This is Annex 3.7/F to Schedule 3 Part 7 referred to in the foregoing Agreement between Scottish Ministers and Amey LG Limited.

SCOTTISH MINISTERS' REQUIREMENTS

SCHEDULE 3 PART 7

NETWORK OPERATIONS SERVICES

ANNEX 3.7/F – CODING FOR ESTIMATED TRAFFIC DELAYS

SCOTTISH MINISTERS' REQUIREMENTS

SCHEDULE 3 PART 7

NETWORK OPERATIONS SERVICES

ANNEX 3.7/F – Coding for Estimated Traffic Delays

Number	Description	Time
1	Little or no delay	Up to 4 minutes
2	Slight delay	More than 4 minutes but less than 8 minutes
3	Moderate delay	More than 8 minutes but less than 12 minutes
4	Serious delay	12 minutes or more

Escalation of Delays

Base Level – code 1

The base level is ascribed to any roadworks (as defined) on the Trunk Road network within the Unit, or in adjacent unit or units, or off the Trunk Road.

First Level – code 2

The first escalation is to slight delay as defined above. The notification requirements specified within Schedule 3 Part 7 shall apply.

Second Escalation – code 3

The second escalation is to moderate delay as defined above. The notification requirements specified within Schedule 3 Part 7 shall apply.

Third Escalation – code 4

The third escalation is to serious delay as defined above. The Operating Company shall determine this escalation level and then seek agreement with the Traffic Scotland Operations and Infrastructure Services Contractor. Notification requirements specified within Schedule 3 Part 7 shall apply in such circumstances.

This is Annex 3.7/G to Schedule 3 Part 7 referred to in the foregoing Agreement between Scottish Ministers and Amey LG Limited.

SCOTTISH MINISTERS' REQUIREMENTS

SCHEDULE 3 PART 7

NETWORK OPERATIONS SERVICES

ANNEX 3.7/G – OVERVIEW OF DELAY MODELLING TOOL

SCOTTISH MINISTERS' REQUIREMENTS

SCHEDULE 3 PART 7

NETWORK OPERATIONS SERVICES

ANNEX 3.7/G – Overview of Delay Modelling Tool

Provision of the Delay Modelling Tool

The delay modelling tool facilities will be supplied by the Director.

Access to the Delay Modelling Tool

No later than 25 Working Days prior to Commencement of Service Date 1 the Operating Company shall provide and maintain at the Central Office a broadband internet connection for access to the delay modelling tool.

Prior to ordering this connection, the Operating Company shall contact the Director to confirm the exact requirements.

Features

The delay modelling tool will use a simple demand/capacity flow model to simulate conditions at a location on the Trunk Road network.

The delay modelling tool will estimate the delay in minutes and the approximate queue length in kilometres resulting from a reduction in operational capacity at a specified location on the Trunk Road network. Estimated delays will take into account delays that are the result of recurrent congestion. The delay modelling tool will provide a delay value relating to the additional journey time that is in excess of the free flow journey time (total delay) and a further delay value for the additional time in excess of the typical journey time for the specified time of day and day of week (normal delay). The location will be defined by network link(s), typically junction to junction, or by subsections of a link.

For roadworks that extend over a number of links, the capacity reduction will be assumed to apply at the most upstream link or section.

Roadworks interventions that affect both directions at a network location will require separate analysis and identification by the Operating Company.

The delay modelling tool will estimate the delay cost based on average traffic composition and value of time figures provided by *Scottish Transport Appraisal Guidance (Scot-TAG*).

A facility to specify an upstream diversion rate as a percentage of the demand flow in vehicles per hour will be provided. The Operating Company shall use this to estimate the cost saving resulting from the implementation of the diversion.

The delay modelling tool will have access to tables of normal flow rates and speeds at different times of the day and days of the week for network links that have monitoring facilities. These will be in three minute or 15 minute periods depending on the level of equipment provision at the location of the monitoring facilities.

The delay modelling tool will have access to tables of normal journey times for some network links. The Operating Company may use these in addition to the point information from monitoring sites to improve the accuracy of the delay estimation.

The Operating Company shall record the output from the delay modelling tool analysis relating to a confirmed roadworks entry in the Automated Diary Facility using the appropriate Automated Diary Facility identifier.

The delay modelling tool will provide details of capacity flow rates and capacity reductions for different road types and typical closure scenarios based on values in the *Design Manual for Roads and Bridges*. These may be overridden by a delay modelling tool user.

Data Inputs

The delay modelling tool will contain appropriate details of:

(i) Normal traffic flow, speed and composition,

(ii) Normal link journey times,

(iii) Link length, free flow speed and journey time and capacity, and

(iv) Value of time figures.

Additional information required to model a capacity reduction will be required to be entered by a delay modelling tool user; this will include:

(i) Location of the works in terms of links and/or sections of links,

(ii) Chainage in metres from start of link/section to start of works,

(iii) Length of works,

(iv) Day(s) of week,

(v) Start/end time,

(vi) Lanes closed,

(vii) Confirmation of free flow speed on the link/section (suggested by the delay modelling tool),

(viii) Confirmation of link capacity remaining after roadworks implemented (suggested by the delay modelling tool),

(ix) Expected diversion rate (to estimate benefit of diversion), and

(x) Length of diversion route.

Report Outputs

The Operating Company shall estimate the following information for each model analysis:

(i) Details of works location (links/sections),

(ii) The delay in minutes during the period while the roadworks are implemented and until resultant queues have cleared (at intervals of three minutes or 15 minutes),

(iii) The queue length (at intervals of three minutes or 15 minutes),

(iv) The total delay in vehicle hours,

(v) The total queue size in vehicle kilometres, and

(vi) The cost/diversion benefit of the roadworks in terms of lost time/saved time

This is Annex 3.7/H to Schedule 3 Part 7 referred to in the foregoing Agreement between Scottish Ministers and Amey LG Limited.

SCOTTISH MINISTERS' REQUIREMENTS

SCHEDULE 3 PART 7

NETWORK OPERATIONS SERVICES

ANNEX 3.7/H – INTELLIGENT TRANSPORT SYSTEMS EQUIPMENT

SCOTTISH MINISTERS' REQUIREMENTS

SCHEDULE 3 PART 7

NETWORK OPERATIONS SERVICES

ANNEX 3.7/H – Intelligent Transport Systems Equipment

Forth Road Bridge Corridor Asset Register	
Asset Description	**Number**
Abnormal Load	
1 x Signal head traffic signal pole	2
2 x Dual head traffic signal pole	2
Abnormal load telephone	2
Emergency Response Telephones (ERT's)	
ERT's	14
Assets mounted on Structures	
Cantilever structure with 2 no lane signals	1
Footbridge with 2xANPR, 1xCCTV, 1xSecurity Camera	1
Weather Station	
Weather Station (Findlay Irvine)	2
Cabinets	
Cabinet	6

Notes:

1) ANPR - Automatic Number Plate Recognition Cameras (operated, maintained and managed by the Police)

SCOTTISH MINISTERS' REQUIREMENTS

SCHEDULE 3 PART 8

STATUTORY FUNCTIONS

CONTENTS **Page No.**

1.	**STATUTORY FUNCTIONS**	**1**
1.1	General	1
ANNEX 3.8/A – Statutory Functions		**3**

SCOTTISH MINISTERS' REQUIREMENTS

SCHEDULE 3 PART 8

STATUTORY FUNCTIONS

1. STATUTORY FUNCTIONS

1.1 General

1.1.1 The Operating Company shall be responsible for carrying out the Statutory Functions on behalf of the Scottish Ministers referred to in Annex 3.8/A of this Part.

1.1.2 When the Operating Company undertakes its duties in accordance with these Statutory Functions, it shall prepare and maintain any appropriate Records and registers in accordance with the requirements of this Contract.

1.1.3 If an authorisation to carry out a Statutory Function on behalf of the Scottish Ministers referred to in Annex 3.8/A of this Part expires, or is withdrawn or revoked by the Scottish Ministers, the Operating Company shall cooperate with the Scottish Ministers as required to facilitate a transfer of such Statutory Functions to the Scottish Ministers or a replacement nominated by them in the timescales provided by the Scottish Ministers.

1.1.4 Before exercising any of the Statutory Functions of the Scottish Ministers referred to in Annex 3.8/A of this Part, the Operating Company shall notify any interested parties in writing of its intentions, except where necessary to address a Category 1 Defect.

1.1.5 For the avoidance of doubt, the Operating Company shall not subcontract or delegate responsibility for any Statutory Functions of the Scottish Ministers referred to in Annex 3.8/A of this Part, except where necessary to address a Category 1 Defect.

1.1.6 The Operating Company is authorised within this Contract to carry out the Statutory Functions of the Scottish Ministers referred to in Annex 3.8/A of this Part under the terms of *The Secretary of State's Trunk Road Functions (Contracting Out) (Scotland) Order 1996 (Statutory Instrument 1996 No. 878 (s.99))* ("the Contracting Out Order"), made under Section 69 of the *Deregulation and Contracting Out Act 1994.*

This is Annex 3.8/A to Schedule 3 Part 8 referred to in the foregoing Agreement between Scottish Ministers and Amey LG Limited.

SCOTTISH MINISTERS' REQUIREMENTS

SCHEDULE 3 PART 8

STATUTORY FUNCTIONS

ANNEX 3.8/A – Statutory Functions

SCOTTISH MINISTERS' REQUIREMENTS

SCHEDULE 3 PART 8

STATUTORY FUNCTIONS

ANNEX 3.8/A – Statutory Functions

1. The function of the Scottish Ministers as roads authority conferred by or under section 2 of the *Local Government (Omnibus Shelters and Queue Barriers) (Scotland) Act 1958* in relation to giving and withholding consent and attaching conditions to any consent.

2. The function of the Scottish Ministers as roads authority conferred by or under section 25(2) of the *Water (Scotland) Act 1980* in relation to giving and withholding consent.

3. The function of the Scottish Ministers as persons having an interest in land as roads authority conferred by or under section 7(4) of the *Litter Act 1983* in relation to giving and withholding consent and arranging terms of any consent.

4. The function of the Scottish Ministers as traffic authority conferred by or under section 65(1) of the *Road Traffic Regulation Act 1984* in relation to the power to cause or permit traffic signs to be placed on or near a road.

5. The functions of the Scottish Ministers as roads authority conferred by or under the following provisions of the *Roads (Scotland) Act 1984*:

   (i) section 2(1) (powers and duties with respect to Trunk Roads etc),

   (ii) section 4(1) (power of the Scottish Ministers to enter into agreements with local roads authorities for them to carry out their functions as roads authority for Trunk Roads etc) but only for carrying out those functions specified in sub paragraph (i) above and sub paragraphs (iii) to (xxx) inclusive of this paragraph 5 of this Annex,

   (iii) section 34 (duty of roads authority with respect to snow and ice on roads),

   (iv) section 50 (power of roads authority to plant trees, shrubs etc within road boundary),

   (v) section 51 (power of roads authority to consent to persons planting trees, shrubs etc within a road boundary),

   (vi) section 56 (power of roads authority to consent to works and excavations in roads),

   (vii) section 57 (power of roads authority with respect to dangerous works in roads),

   (viii) section 58 (power of roads authority to permit occupation of parts of roads for the deposit of building materials etc),

   (ix) section 59 (power of roads authority with respect to obstructions in roads),

(x) section 60 (power of roads authority to fence and light obstructions and excavations in roads on default of person required to do so and to recover the expenses thereof),

(xi) section 61 (power of roads authority to give permission to place and maintain etc appliances in roads),

(xii) section 63 (power of roads authority with respect to new accesses over verges and footways),

(xiii) section 64 (power of roads authority to consent to statutory undertakers using appliances or vehicles on footways, footpaths and cycle tracks),

(xiv) section 66 (power of roads authority with respect to maintenance of vaults and cellars etc under roads),

(xv) section 67 (power of roads authority with respect to doors etc opening outwards into roads),

(xvi) section 85 (power of roads authority to permit the deposit of builders' skips on roads),

(xvii) section 86 (power of roads authority to remove or reposition builders' skips and to recover the expenses thereof),

(xviii) section 87 (power of roads authority with respect to unauthorised structures erected, deposited or placed on roads),

(xix) section 88 (power and duty of roads authority with respect to projections impeding or endangering road users),

(xx) section 89 (power and duty of roads authority with respect to accidental obstructions in roads),

(xxi) section 90 (power of roads authority to consent to the placing of bridges, beams, rails, pipes, cables etc over roads),

(xxii) section 91 (power of roads authority to prevent danger to roads from nearby vegetation and fences etc or from inadequate retaining walls) except sub-section (5),

(xxiii) section 92 (power of roads authority with respect to trees etc planted within 5 metres of the edge of carriageways),

(xxiv) section 93 (powers of roads authority to protect road users from roadside dangers),

(xxv) section 94(1)(a) (power of roads authority to fill in unnecessary roadside ditches subject to the consent of owners and occupiers),

(xxvi) section 95 (power of roads authority to recover expenses of removing mud etc deposited from vehicles onto roads so as to be dangerous),

(xxvii) section 98 (power of roads authority with respect to stray and other animals on roads),

(xxviii) section 99 (power of roads authority with respect to the prevention of the flow of water etc onto roads),

(xxix) section 120 (duty of roads authority to have regard to the needs of disabled and blind persons in executing works etc in roads), and

(xxx) section 141 (power of roads authority to execute works etc on default of persons required to do so) but only in relation to those functions specified in the foregoing sub-paragraphs of this paragraph).

6. The functions of the Scottish Ministers as road works authority conferred by or under the following provisions of the *New Roads and Street Works Act 1991*:

More details on the requirements of the sections of the *New Roads and Streetworks Act 1991* listed below are contained in Schedule 7 Part 5, Annex 7.5/A.

(i) section 109 (power of road works authority to permit execution of works and power to substitute existing permission with new one),

(ii) section 115 (power of road works authority to give directions as to the timing of road works),

(iii) section 117 (power of road works authority to restrict road works following substantial works carried out for road purposes),

(iv) section 118 (duty of road works authority to coordinate execution of works of all kinds on roads),

(v) section 122 (power of road works authority to designate roads as having special engineering difficulties),

(vi) section 123 (power of road works authority to designate roads as traffic sensitive), and

(vii) section 131 (power of road works authority with respect to reinstatement of roads by undertakers).

7. The function of the Scottish Ministers conferred by or under section 150 of the *Local Government etc (Scotland) Act 1994* (power of the Scottish Ministers to place mandatory traffic signs on roads in extraordinary circumstances).

SCOTTISH MINISTERS' REQUIREMENTS

SCHEDULE 3 PART 9

COLLABORATION REQUIREMENTS

CONTENTS **Page No.**

1.	**REQUIREMENTS**	**1**
1.1	General Requirements	1
1.2	Collaboration Forums	1
1.3	Forth Bridges Forum	1
1.4	Membership of Bridge Organisations	2
1.5	Reporting Requirements	2

SCOTTISH MINISTERS' REQUIREMENTS

SCHEDULE 3 PART 9

COLLABORATION REQUIREMENTS

1. REQUIREMENTS

1.1 General Requirements

1.1.1 The Operating Company shall assist the Director to identify collaboration opportunities with other public sector organisations within the region covered by the Unit. Other public sector organisations may include other Scottish and United Kingdom Government departments and local authorities.

1.1.2 In assisting the Director, the Operating Company shall identify:

(i) opportunities for improving the efficiency and effectiveness of service delivery,

(ii) opportunities for developing and implementing arrangements for Mutual Aid, and

(iii) opportunities for sharing best practice, innovation, skills and experience to support collaborative working between the Operating Company and other public sector organisations.

1.1.3 No later than one month following the identification of a potential collaborative opportunity, the Operating Company shall provide a report to the Director that:

(i) describes the collaborative opportunity,

(ii) details the potential benefits to all parties involved, and

(iii) identifies any additional costs associated with developing and delivering the collaborative opportunity.

The Director will consider the report and confirm to the Operating Company if the collaborative opportunity shall be pursued.

1.2 Collaboration Forums

1.2.1 The Operating Company shall establish a Trunk Road collaboration forum within the region covered by the Unit. The Trunk Road collaboration forum shall comprise the Director, the Operating Company, the Performance Audit Group and other public sector organisations consented to by the Director. The Trunk Road collaboration forum may also, at the discretion of the Director, include other service delivery companies.

1.2.2 The Operating Company shall assist the Director in co-ordinating and sharing opportunities for efficiency savings and service improvements with other Trunk Road collaboration forums in other units.

1.2.3 The Operating Company shall assist the Director by attending and promoting collaborative opportunities at other collaboration forums within or out with the Unit.

1.3 Forth Bridges Forum

1.3.1 The Operating Company shall hold membership of the Forth Bridges Forum.

1.3.2 The Operating Company shall assist in fulfilling the functions of the Forth Bridges Forum through:

(i) Taking a strategic approach to the operation and maintenance of the Principal Crossings,

(ii) Maintaining effective engagement with local communities on issues that may affect, impact or be of interest to them,

(iii) Promoting the location of each, and both, of the Queensferry Crossing and the Forth Road Bridge as a unique tourist destination, and

(iv) Developing and supporting initiatives and measures to encourage an increase in active and sustainable public transport across the Firth of Forth.

1.3.3 The Operating Company shall support the activities of the Forth Bridges Forum as detailed in Schedule 3 Part 1.

1.4 Membership of Bridge Organisations

1.4.1 The Operating Company shall hold membership of the International Cable Supported Bridge Operators Association (the "ICSBOA") and subject to an Order other similar organisations as advised by the Director.

1.4.2 The Bridges Manager shall be the key point of contact for all dealings with the ICSBOA and such other such similar organisations.

1.4.3 The Operating Company shall assist the Director to identify collaboration opportunities with the ICSBOA and such other similar organisations and shall identify:

(i) opportunities for improving the efficiency and effectiveness of service delivery,

(ii) opportunities for developing and implementing arrangements for Mutual Aid, and

(iii) opportunities for sharing best practice, innovation, skills and experience to support collaborative working between the Operating Company and the ICSBOA and such other organisations.

1.5 Reporting Requirements

1.5.1 The Operating Company shall record details of all collaborative opportunities and provide a quarterly report to the Director detailing:

(i) the collaborative opportunities identified,

(ii) the potential benefits of each collaborative opportunity for all parties involved,

(iii) the collaborative opportunities pursued,

(iv) the service improvements delivered by each collaborative opportunity entered into, and

(v) the efficiency savings achieved by each collaborative opportunity entered into.

SCOTTISH MINISTERS' REQUIREMENTS

SCHEDULE 3 PART 10

PARTNERING

CONTENTS **Page No.**

1.	**REQUIREMENTS**	**1**
1.1	General Requirements	1
1.2	The Partnering Leadership Board	1

SCOTTISH MINISTERS' REQUIREMENTS

SCHEDULE 3 PART 10

PARTNERING

1. REQUIREMENTS

1.1 General Requirements

1.1.1 This Part details the requirements for the development and establishment of partnering arrangements between the Director and the Operating Company. The purpose of such arrangements is to:

(i) provide the leadership and direction required to establish an integrated team and successful delivery partnership,

(ii) provide a framework to deliver innovation and flexibility,

(iii) develop a performance based culture focussed on delivery of the requirements of this Contract, and

(iv) demonstrate that such arrangements are delivering these objectives, the requirements of this Contract and value for money in all services provided by the Operating Company.

1.1.2 No later than 30 days after Commencement of Service Date 1, the Director and the Operating Company shall establish a Partnering Leadership Board. The Partnering Leadership Board shall be responsible for developing an integrated team focussed on the objectives set out in paragraph 1.1.1 of this Part.

1.1.3 The “Partnering Leadership Board” means a group consisting of a minimum of four senior management representatives, two representing the Director's organisation and two representing the Operating Company, who are responsible for implementing the partnering requirements stated in this Part.

1.2 The Partnering Leadership Board

1.2.1 The Director will appoint one of the representatives to act as the chairman of Partnering Leadership Board. At the Director's discretion, the Performance Audit Group may also be invited to attend any meetings of the Board.

1.2.2 The Partnering Leadership Board shall meet at quarterly intervals at a time and location to be determined by the Board and all decisions made by the Partnering Leadership Board shall be made through consensus.

1.2.3 No later than 30 days after the start of the first Annual Period and each subsequent Annual Period, the Partnering Leadership Board shall develop, agree and publish an annual business plan for the Unit. When developing the annual business plan for the Unit, the Partnering Leadership Board shall consider the Director's corporate documents. The annual business plan for the Unit shall set out how the integrated team will deliver the objectives set out in paragraph 1.1.1 of this Part.

1.2.4 During the quarterly meetings, the Partnering Leadership Board shall:

(i) review progress of the delivery of the annual business plan for the Unit and agree any actions required to ensure delivery, and

(ii) review the performance of the integrated team and agree any corrective actions required to meet these targets.

SCOTTISH MINISTERS' REQUIREMENTS

SCHEDULE 3 PART 11

COMMUNITY BENEFITS

CONTENTS **Page No.**

1.	**INTRODUCTION**	**1**
1.1	General	1
2.	**REQUIREMENTS**	**1**
2.1	Training and Employment	1
2.2	Supply Chain	2
2.3	Community Engagement	2

SCOTTISH MINISTERS' REQUIREMENTS

SCHEDULE 3 PART 11

COMMUNITY BENEFITS

1. INTRODUCTION

1.1 General

1.1.1 This Part details the Operating Company's obligations for implementing community benefits that support Transport Scotland in delivering the objectives stated in the Scottish Government's *Scotland's Transport Future (2004),* Transport Scotland's *Corporate Plan* 2012-15 and the UK Government's policies at www.dwp.gov.uk/policy/welfare-reform/get-britain-working.

1.1.2 No later than 30 days prior to Commencement of Service Date 1, the Operating Company shall provide to the Director its training and employment plan. This plan shall, as a minimum, contain details of the Operating Company's approach to training and employing its staff.

1.1.3 From Commencement of Service Date 1, the Operating Company shall provide a quarterly report to the Director demonstrating its compliance with the requirements of this Part.

2. REQUIREMENTS

2.1 Training and Employment

2.1.1 In addition to its usual methods of advertising vacancies, the Operating Company shall advertise all jobs through Jobcentre Plus and local employability partnerships within the Unit.

2.1.2 The Operating Company shall, as a minimum, ensure that two new recruits are engaged each Annual Period who are New Entrants. All New Entrants shall have either a pre-apprenticeship, apprenticeship, trainee or employment contract with the Operating Company.

2.1.3 During each Annual Period the Operating Company shall, as a minimum:

(i) ensure that either two members of existing staff or two new recruits are trained in a relevant qualification to Scottish Vocational Qualifications Level 2 or equivalent,

(ii) ensure that either one member of existing staff or one new recruit is undertaking relevant professional training,

(iii) provide three work experience placements related to this Contract in accordance with the requirements of the work experience element of the UK Government's policies as detailed in paragraph 1.1.1 of this Part. All travel costs incurred by each person undertaking a work experience placement shall be paid by the Operating Company. At least one of the placements shall be sourced from the north side of the Firth of Forth and at least one of the placements shall be sourced from the south side of the Firth of Forth, and

(iv) two work experience placements for undergraduates studying an engineering discipline.

2.2 Supply Chain

2.2.1 The Operating Company shall advertise all new sub-contracting opportunities related to the execution of this Contract through the Public Contracts Scotland portal.

2.2.2 The Operating Company shall support the Scottish Government's commitment to ensuring that small and medium sized enterprises have fair access to public sector contracts in Scotland as specified in the Scottish Government's economic recovery programme.

2.2.3 The Operating Company shall follow ethical sourcing practices such that freedom of association and the right to collective bargaining are respected, ensuring that:

(i) its employees and those of its subcontractors have the right to join or form trade unions of their own choosing and to bargain collectively,

(ii) it allows the activities of trade unions, and

(iii) employees' representatives are not discriminated against.

2.3 Community Engagement

2.3.1 The Operating Company shall be suitably resourced to meet the extensive level of communication and community involvement that is required in relation to the Unit.

2.3.2 Working in close liaison with Transport Scotland, the Operating Company shall build on and enhance the existing communication channels set up by FETA and FCBC.

2.3.3 The Operating Company shall engage proactively with the communities adjacent to the Trunk Road network within the Unit and community groups within the region of the Unit. The Management System shall contain details of the processes and procedures connected with this activity.

2.3.4 During each Annual Period, the Operating Company shall identify and implement at least one opportunity for developing young people within the Unit in accordance with the Scottish Government's *Creating Opportunities Together* document. Such opportunities shall be in addition to the other requirements stated in this Part, and support two Work Clubs within the Unit or adjacent to the Unit, in accordance with the UK Government's policies as detailed in paragraph 1.1.1 of this Part.

2.3.5 In each Annual Period, the Operating Company shall be required to undertake a programme of sponsorship of high schools within or adjacent to the Unit including as a minimum the continuation of the programme of sponsorship of Queensferry High School historically undertaken by FETA.

2.3.6 In each Annual Period, the Operating Company shall undertake a minimum of four visits to primary and secondary schools within or adjacent to the Unit to make presentations regarding its role and work. Such presentations shall be tailored to the needs of the age groups within the schools selected.

2.3.7 In each Annual Period, the Operating Company shall invite engineering students from a selection of Scottish Universities on an individual basis to tour the Forth Road

Bridge and or the Queensferry Crossing and attend a presentation regarding the relevant bridge's construction, operation and maintenance.

Such invitations shall be limited to between 30 and 40 students per University for practical and safety reasons.

2.3.8 The Operating Company may conduct the presentation at the relevant University in advance of the tour if preferred.

2.3.9 The Operating Company shall consider extending these invitations to additional Universities. Proposals for additional invitations shall be submitted to the Director for his written consent. The Operating Company shall issue such further invitations subject to an Order.

2.3.10 The Operating Company shall consider requests for:

(i) visits to the Forth Road Bridge,

(ii) visits to the Queensferry Crossing following Commencement of Service Date 2, and

(iii) public speaking engagements,

from engineering institutions, business groups and similar organisations. The Operating Company shall consider and accept such requests on merit where it deems that the opportunity will promote greater understanding of its role and work on the Unit. Priority shall be given to local organisations based in the immediate vicinity of the Principal Crossings.

2.3.11 In each Annual Period, the Operating Company shall provide a suitable member (or members) of staff for periods not exceeding 20 Working Days in total to provide industry related lectures and mentoring in response to requests from further education establishments in addition to the requests detailed in paragraph 2.3.10 (i), (ii) and (iii) of this Part. When the limit of 20 Working Days has been reached, any further requests shall be referred to the Director. Subject to an Order, the Operating Company shall undertake such further requests.

2.3.12 The Operating Company shall nominate local charities which it wishes to support through proactive charity fund raising; such nominations and fund raising activities shall require the Director's consent prior to implementation. The proposals shall include justification for the charity or charities selected, the type of activities envisaged and the target level of funds to be raised. The Operating Company shall undertake such activities on a minimum of two occasions in each Annual Period.

2.3.13 The Operating Company shall offer tours of the Forth Road Bridge for auction at charity fundraising events undertaken by third parties on a minimum of six occasions in each Annual Period. With effect from Commencement of Service Date 2, the tours offered on each such occasion shall be of either the Principal Crossings or the individual bridges at the discretion of the Operating Company.

2.3.14 With effect from Commencement of Service Date 1, the Operating Company shall undertake larger scale charity fundraising activities at a corporate level at least once in every two year period. The Operating Company's proposals for such activities shall require the Director's consent prior to implementation. The proposals shall

include justification for the charity or charities selected, the type of activities envisaged and the target level of funds to be raised.

2.3.15 When major works affecting bridge users or the local community are planned, a programme of dialogue and feedback and consultation events with interested parties shall be established by the Operating Company in accordance with its communication plan required in Schedule 3 Part 5.

2.3.16 In each Annual Period, the Operating Company shall hold one regular liaison meeting with Councillors from Fife, City of Edinburgh and West Lothian Councils respectively and any other Councils who become members of the Forth Bridges Forum. The Operating Company shall undertake such meetings with a Transport Scotland representative in attendance.

2.3.17 In each Annual Period, the Operating Company shall hold a minimum of two liaison meetings with Queensferry and District Community Council. The meetings shall reflect the communications strategy for the Unit and discuss issues which are of interest to local stakeholders.

2.3.18 In each Annual Period, the Operating Company shall hold a minimum of one liaison meeting with North Queensferry, Inverkeithing, Rosyth and Newton Community Councils. The meetings will reflect the communications strategy for the Unit and discuss issues which are of interest to local stakeholders.

signed for and on behalf of The Scottish Ministers

by ……...Roy Brannen…….

on …..…… December 2014……

at ……Glasgow……...……

…….…….

Authorised Signatory

signed for and on behalf of AMEY LG Limited

by

……...……

on ……..… December 2014……

at ……Glasgow……..….

……..…

Director/Company Secretary/
Authorised Signatory*

SCOTTISH MINISTERS' REQUIREMENTS

SCHEDULE 4 PART 1

FINANCIAL AND CONTRACT MANAGEMENT

CONTENTS **Page No.**

1.	**INTRODUCTION**	**1**
2.	**THE OPERATING COMPANY'S GENERAL OBLIGATIONS FOR FINANCIAL AND CONTRACT MANAGEMENT**	**1**
2.1	Staffing	1
2.2	Procedures	2
3.	**CONTRACT CONTROL AND MANAGEMENT**	**5**
3.1	Introduction	5
3.2	General Requirements	5
4.	**FINANCIAL AND CONTRACT MANAGEMENT PROCEDURES**	**8**
4.1	The Annual Process	8
4.2	Inspection and Assessments Types	12
4.3	Skid Resistance Management	13
4.4	Programme Development	14
4.5	Statements of Intent and Value for Money Assessments	15
4.6	Programmes and Profiles	17
4.7	Bids	18
4.8	Orders for Operations and Works Contract Instructions	19
4.9	Further Detailed Enquiries	20
4.10	Further Detailed Directions	20
4.11	Scheme Completion and Closure	21
4.12	Oral Orders	22
4.13	Operating Company Operations Instructions	22
4.14	New Rates	23
4.15	Operating Company Statements for Payment Purposes	24
4.16	9901 Activation	25
4.17	Operating Company Financial Management Flexibility	26
4.18	Works Contractor Financial Control	27
4.19	Payment of Works Contractors	27
4.20	Financial Monitoring and Forecasting Process	28
4.21	Carbon Reporting	29
4.22	Damage to Crown Property	29
4.23	Professional Services Register	29

ANNEX 4.1/A – Statement of Intent and Value for Money forms **31**

ANNEX 4.1/B – Financial Profiling **53**

ANNEX 4.1/C – Work Series and Codes **59**

ANNEX 4.1/D – Statement Reports **65**

ANNEX 4.1/E – Financial Monitoring and Forecasting Reports **69**

ANNEX 4.1/F – Works Contractor Series and Item Numbers **77**

ANNEX 4.1/G – Detailed Functions and Functionality of the Contract Control and Management Function of the Integrated Roads Information System **81**

ANNEX 4.1/H – Standard Reports from the Contract Control and Management Function of the Integrated Roads Information System **111**

ANNEX 4.1/I – Equality Act Requirements **119**

SCOTTISH MINISTERS' REQUIREMENTS

SCHEDULE 4 PART 1

FINANCIAL AND CONTRACT MANAGEMENT

1. INTRODUCTION

The Director will provide an internet based, Integrated Roads Information System with contract control and management function for use by the Operating Company in:

(i) the provision of programmes, Bids and budgets for Schemes,

(ii) the receiving of Orders, recording details of Scheme delivery and making claims for payment, and

(iii) reporting on the material and transport carbon arising from the Operations of the Operating Company.

1.1.2 The Operating Company shall include documented procedures in the Management System to deliver the requirements of this Part. Detailed requirements relating to the processes and procedures to be included in the Management System are stated throughout this Part. Such requirements for processes and procedures shall apply to the Operating Company and its contractors and sub-contractors when executing Operations.

2. THE OPERATING COMPANY'S GENERAL OBLIGATIONS FOR FINANCIAL AND CONTRACT MANAGEMENT

2.1 Staffing

2.1.1 The Operating Company shall appoint both a Business Manager and Management System Manager to undertake the relevant key responsibilities over financial and contract management shown in Schedule 5 Part 4, Annex 5.4/B.

2.1.2 No later than 25 Working Days prior to Commencement of Service Date 1, the Operating Company shall identify individuals from within its organisation who shall have responsibility for all elements of programme and budget preparation. During the Mobilisation Period 1 and for the duration of this Contract, the Operating Company shall train its staff in programming and budget preparation and ensure that there are sufficient staff trained to deliver the requirements of this Part at all times.

2.1.3 The Operating Company shall identify an individual or individuals to train Operating Company staff in the specific activities and tasks required for relevant functions of the Integrated Roads Information System operated by the Director, including the contract control and management function. The Operating Company shall ensure that sufficient staff are available at all times to operate and maintain such systems.

2.1.4 The Director will provide appropriate training on the contract control and management function of the Integrated Roads Information System to the trainer, or trainers nominated by the Operating Company in accordance with the requirements of paragraph 2.1.3 of this Part. Training by the Director will be provided prior to Commencement of Service Date 1 and until the Service End Date as required.

2.1.5 Following training on the contract control and management function of the Integrated Roads Information System by the Director, the Operating Company shall provide training via its trainer, or trainers, to all relevant staff.

2.2 Procedures

2.2.1 The Operating Company shall develop, implement and maintain written financial procedures in the Management System to ensure the preparation of robust estimates of costs for a Scheme which is the subject of a Bid and that Records are maintained to provide an audit trail for all information contained on such Bids so that the financial commitment within the annual programme does not exceed the funds allocated for Operations by the Director.

2.2.2 The Operating Company shall develop, implement and maintain documented procedures for:

(i) the provision of Records for each Scheme, tracing the origin and location in the Unit of everything incorporated into the Unit by the Operating Company as part of each Scheme,

(ii) the provision of Records for each Works Contract tracing the origin and location in the Unit of everything incorporated into the Unit by a Works Contractor as part of each Scheme,

(iii) the provision of Records substantiating the quantities and value of items for the Operations for which payment under this Contract is claimed by the Operating Company (this provision shall include all activities, regardless of the method of payment referred to in Schedule 2 Part 2),

(iv) the provision of documented evidence that the Operating Company has discharged its obligations under this Contract in respect of all matters for which payment under this Contract is claimed, and

(v) the provision of Records for the Carbon Management System in accordance with the requirements of Schedule 5 Part 8.

2.2.3 The Operating Company shall ensure that all quantities and measurements which form the basis of any Statement are supported by the use of written financial procedures. Such written financial procedures shall ensure that:

(i) any information required by either the Operating Company or the Director is collected at the time of the measurement and is recorded within the contract control and management function of the Integrated Roads Information System,

(ii) all measurements and quantities are recorded on Site copy Operations Instructions and pro-forma supporting forms as soon as reasonably practicable as referred to in paragraph 4.13 of this Part, and

(iii) there is a sufficient degree of internal control specified within such procedures to instruct, supervise and check the Operations, which ensures the correctness of such measurements and quantities and their recording in the contract control and management function of the Integrated Roads Information System.

2.2.4 The Operating Company's written financial procedures shall include requirements which are applicable to the following categories of Operations:

(i) Series 100 to 5000 inclusive and 6800:

(a) demonstrable evidence that the selected rates are the correct payment mechanism,

(b) evidence of any subsequent verification checks carried out, and

(c) evidence to support completion of Operations,

(ii) Series 6100:

(a) Records of Operations carried out in respect of charges,

(iii) Series 6200:

(a) creation and maintenance of a Professional Services register of suitably qualified Operating Company staff in the form provided for in Annex 4.1/G (22) of this Part,

(b) demonstrable evidence that Professional Services rates are the correct payment mechanism,

(c) timesheet analysis in sufficient detail to describe the Operations performed,

(d) suitable authorisation and verification of timesheets,

(e) completion and signature of timesheets by all relevant staff no later than the end of the week after which Operations were carried out,

(f) demonstrable evidence to support the rate or price being charged, and

(g) demonstrable evidence to support the completion of Operations,

(iv) Series 6300:

(a) demonstrable evidence that procurement and supervision of Works Contracts is the correct payment mechanism, and

(b) Records to support the finalisation of values (rates and prices) claimed for procurement or supervision of Works Contracts in relation to the stage of Operations provided,

(v) Series 6500:

(a) demonstrable evidence that time work schedule is the correct payment mechanism and authorised by the Director where applicable under the other provisions of this Contract,

(b) labour timesheet analysis in sufficient detail to describe the Operations performed,

(c) suitable authorisation and verification of labour timesheets,

(d) completion and signature of timesheets by all labour no later than the end of the week after which Operations were carried out,

(e) demonstrable evidence to support the labour rate being claimed,

(f) material cost Records from statements and invoices,

(g) Constructional Plant charges and any other charges or costs,

(h) evidence of any subsequent verification or checks carried out, and

(i) demonstrable evidence to support completion of Operations,

(vi) Series 6600:

(a) Records of accounts and invoices, and demonstrable evidence of payment of accounts and invoices,

(vii) Series 6700:

(a) Record of network change by a Scottish Ministers' trunking or de-trunking order,

(viii) Series 7000:

(a) demonstrable evidence that lump sum is the correct payment mechanism, and

(b) demonstrable evidence to support completion of Operations.

2.2.5 The Operating Company shall document and control all information transferred from the measurement processes referred to in this Part and, wherever relevant, such information shall be reconciled and verified with the source Records held by the Operating Company.

2.2.6 The Operating Company's written financial procedures shall ensure that the collation of Statement information is controlled and verifiable. Records shall be maintained within the contract control and management function of the Integrated Roads Information System to provide an audit trail for all information contained in such Statements.

2.2.7 The Operating Company shall establish documented controls for the Statement and payment processes as part of its written financial procedures contained within the Management System. Such documented controls shall ensure that the following Statement information is contractually valid and correct in accordance with:

(i) rates and prices claimed under this Contract,

(ii) Order numbers, Scheme Identifiers, Work Codes, routes and combinations thereof,

(iii) series or item numbers, and

(iv) the integrity of Statement calculations including quantity, rate and price multiplication, additions of totals, subtotals and cumulatives.

2.2.8 The Operating Company's documented controls shall require a review of Statements and Statement information by the Operating Company's Core Management Team prior to the submission of each Statement to the Director.

2.2.9 Works Contractor payment applications shall be submitted by the Operating Company to the Director in accordance with the procedures referred to within this Part and Schedule 6 Part 1.

2.2.10 The Operating Company shall ensure that:

(i) details of each Works Contract are logged within the contract control and management function of the Integrated Roads Information System as referred to in Annex 4.1/G (17) of this Part,

(ii) where a Works Contract includes more than one Scheme, the Operating Company produces the required details for each Scheme,

(iii) a complete copy, including all information, of the Works Contractor's statement requesting payment issued immediately after the issue of the certificate of completion for the Scheme is held by the Operating Company for review by the Performance Audit Group, and

(iv) submission of the Works Contractor's payment application is subject to controls and reviews by the Operating Company to allow accurate monthly reporting by the Operating Company to the Director.

3. CONTRACT CONTROL AND MANAGEMENT

3.1 Introduction

3.1.1 Contract control and management shall be undertaken by the Operating Company through use of the contract control and management function of the Integrated Roads Information System.

3.1.2 The Operating Company shall provide sufficient terminals in its offices and depots to allow input of data and use of the contract control and management function of the Integrated Roads Information System to meet the requirements of this Contract.

3.1.3 The Operating Company shall follow the security requirements of the Director in its use of the contract control and management function of the Integrated Roads Information System.

3.2 General Requirements

3.2.1 The Operating Company shall supply the Director with a list of its staff who require access to the contract control and management function of the Integrated Roads Information System. This list shall include each person’s role and responsibilities under this Contract.

3.2.2 Each of the following shall be deemed to be a document within the contract control and management function of the Integrated Roads Information System:

(i) Scheme Identifier generation,

(ii) programmes,

(iii) budgets,

(iv) Core Operations,

(v) Bids,

(vi) Orders,

(vii) Works Contract Instructions,

(viii) Confirmation of Oral Orders,

(ix) Further Detailed Enquiries,

(x) Further Detailed Directions,

(xi) Operations Instructions,

(xii) Scheme Completion Date,

(xiii) Statements or Works Contractor payment applications,

(xiv) Payment Notified Records,

(xv) Payment Received Records,

(xvi) Works Contract payment certification,

(xvii) Professional Services register amendments or additions,

(xviii) Trunk Roads damages claims,

(xix) Contract Price Fluctuation indices amendments, and

(xx) carbon factors amendments.

3.2.3 Up to the point of transaction by any party, the other parties will not be allowed to see the information contained in a document.

When a transaction has been executed, the Integrated Roads Information System will make the document available to all parties and automatically send electronic notification, in the form of an external e-mail message, to the responsible persons in the other organisations, identifying what action has occurred.

3.2.4 The e-mails referred to in paragraph 3.2.3 of this Part will contain as a minimum the following information:

(i) the type of transaction,

(ii) the identity of the responsible person that the e-mail is intended to be viewed by,

(iii) a general description relating to the transaction, which shall include any time dependencies relating to it, and

(iv) for those transactions relating to Schemes, the Scheme Identifier with the route number and Work Code.

3.2.5 For all Schemes, the contract control and management function of the Integrated Roads Information System will be capable of attaching other information to such documents including textual documents, spreadsheets, databases, presentations, photographs, Drawings, programmes and any other documentation or data relevant to that Scheme. The Operating Company shall notify the Director of any file type it wishes to use within the contract control and management function of the Integrated Roads Information System for which a reader is not available.

3.2.6 The Director will provide report writing facilities within the contract control and management function of the Integrated Roads Information System for the use of the Director, the Performance Audit Group and the Operating Company.

All reports on the Operating Company's activity for a particular month shall be available within the contract control and management function of the Integrated Roads Information System no later than the 14th day of the next month.

3.2.7 As a minimum, the following reports from the contract control and management function of the Integrated Roads Information System shall be deemed Standard Reports to be produced by the Operating Company on a monthly basis for the use of the Director and Performance Audit Group:

(i) Order versus spend,

(ii) costs by item series,

(iii) Statement by Operations Instructions for current month,

(iv) Scheme Completion Date and Scheme Closure Date,

(v) Payment Notified Record checking facility,

(vi) Works Contractors – tender costs and outturn costs,

(vii) Operations Schemes outturn costs compared to Estimated Bid Values,

(viii) Order register showing related Further Detailed Enquiries and Further Detailed Directions,

(ix) Further Detailed Enquiries,

(x) Further Detailed Directions,

(xi) Bids not subject to an Order,

(xii) Schemes subject to an Order but not started,

(xiii) rates and prices for new items,

(xiv) Contract Price Fluctuation indices by month,

(xv) material and transport carbon outputs in accordance with the requirements of Annex 4.1/G (23) of this Part,

(xvi) fields for ad hoc reports, and

(xvii) programme for the current and following Financial Year detailing the Operation type and route number.

3.2.8 Where particular Schemes or Orders, or parts of Schemes or Orders, are to be paid under time work schedule as referred to in Schedule 2 Part 1 and Schedule 2 Part 2, the contract control and management function of the Integrated Roads Information System shall, as a minimum, be populated by the Operating Company with:

(i) measurement data,

(ii) actual cost data, and

(iii) supporting calculations in relation to labour staff, Constructional Plant and materials.

Annex 4.1/G (20) of this Part details the supporting documentation under individual Operations Instructions to be held by the contract control and management function of the Integrated Roads Information System.

The Director shall be entitled to omit from payment any amounts due for Operations undertaken under time work schedule where the appropriate cost and measurement data in accordance with Annex 4.1/G (20) of this Part has not been logged onto the

contract control and management function of the Integrated Roads Information System.

The back-up source documentation for the reports listed in paragraph 3.2.7 of this Part shall be made available to the Director and the Performance Audit Group for inspection as follows:

(i) held within the contract control and management function of the Integrated Roads Information System with suitable permissions in place, or

(ii) retained at the Operating Company's Central Office, or

(iii) sent to the offices of the Performance Audit Group within three Working Days of a written request for such information from the Director.

4. FINANCIAL AND CONTRACT MANAGEMENT PROCEDURES

4.1 The Annual Process

4.1.1 The Operating Company shall manage and monitor budgets based on the Financial Year. The annual budget will be supplied to the Operating Company by the Director and will identify sums available for Core Operations, Ordered Operations and Works Contracts.

4.1.2 The Business Manager shall have day to day responsibility for all matters related to budgetary expenditure and control and shall be the Operating Company's point of contact for all issues related to budgetary management and control specified in this Part.

4.1.3 The financial management and monitoring process of programmes and budgets for this Contract shall be based on operating through an annual cycle of events.

4.1.4 Each annual cycle shall include the tasks described in paragraphs 4.1.5 to 4.1.23 of this Part. The process is illustrated in Figure 4.1.4.A below.

Figure 4.1.4.A – Annual Cycle

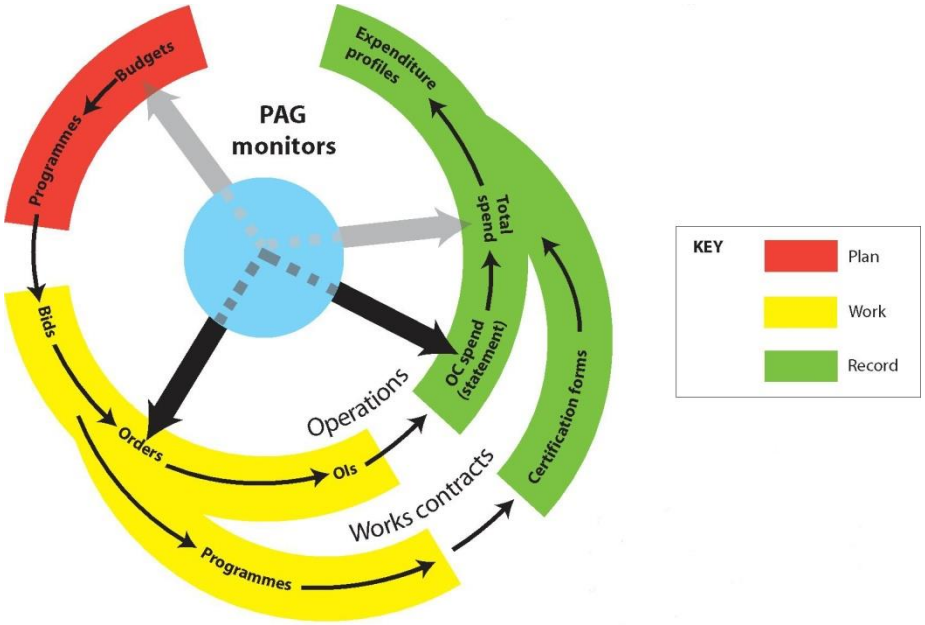

4.1.5 The Director will use the contract control and management function of the Integrated Roads Information System to generate Scheme Identifiers for Core Operations until the Service End Date. Core Operations will be outwith the annual Bid process but shall be included within the one, three and 10 year maintenance programmes to fully record the commitment of annual budget. Any reference to a 10 year programme in this Part relates solely to the programming requirements for the Principal Crossings.

4.1.6 The Operating Company shall and Director will undertake the various assessments and inspections described in paragraph 4.2 of this Part.

4.1.7 For roads structural maintenance Schemes, the Operating Company shall analyse the results of the assessments and inspections described in paragraph 4.2 of this Part in accordance with the requirements contained within Transport Scotland's *Annual Process for Roads Structural Maintenance*. The Director will provide Transport Scotland's *Annual Process for Roads Structural Maintenance* to the Operating Company no later than 25 Working Days prior to Commencement of Service Date 1 and stipulate the relevant timescales for submission and approval of roads structural maintenance Schemes.

4.1.8 For Structures maintenance Schemes, the Operating Company shall analyse the results of assessments and inspections described in paragraph 4.2 of this Part in accordance with the *Design Manual for Roads and Bridges* together with any relevant guidance provided by the Director.

4.1.9 The Operating Company shall analyse the data within the pavement management, routine maintenance and management and structures management functions of the Integrated Roads Information System as part of the preparation and maintenance of an annual, three and 10 year rolling programme.

4.1.10 The Operating Company shall address the requirements of the *Roads for All: Good Practice Guide for Roads* on all proposed Schemes as part of the preparation and maintenance of an annual, three and 10 year rolling programme.

4.1.11 Based on the assessments and inspections described in paragraph 4.2 of this Part, the Operating Company shall submit to the Director annually:

(i) a draft 10 year programme of Ordered Operations, Core Operations and Works Contracts,

(ii) a draft three year programme of Ordered Operations, Core Operations and Works Contracts,

(iii) a draft one year programme of Ordered Operations, Core Operations and Works Contracts,

(iv) recommendations for improvements that could be incorporated into Operations and Works Contracts,

(v) recommendations for further investigations required to enable Operations and Works Contracts to be accurately defined, and

(vi) outline Bids, including preliminary estimates, for Operations and Works Contracts for the one year, three year and 10 year programmes.

The Operating Company shall meet with the Director to discuss the proposed programmes, recommendations and outline Bids in accordance with the requirements of paragraphs 4.4 and 4.5 of this Part.

4.1.12 Following this meeting, the Director will confirm the accepted indicative one, three and 10 year programmes for Ordered Operations, Core Operations and Works Contracts to the Operating Company. The Director will also confirm the indicative budget for the next Financial Year.

4.1.13 The Operating Company shall submit to the Director revised Bids within the timescales required in Transport Scotland's *Annual Process for Roads Structural Maintenance* and the requirements shown at Figure 4.1.4.A, including:

(i) detailed estimates for each Operations and Works Contract,

(ii) a detailed one year programme, and

(iii) a detailed financial profile.

4.1.14 Bids shall be submitted in accordance with the requirements of paragraph 4.7 of this Part. The Director will thereafter issue Orders to the Operating Company to undertake those Operations that he has selected from the Bids submitted.

4.1.15 The Operating Company shall issue Operations Instructions for Operations.

4.1.16 For approved Schemes to be executed as a Works Contract, the Director will issue a Works Contract Instruction to the Operating Company. A Works Contract Instruction shall not be issued until such time as Statements of Intent and Value for Money Assessments in accordance with the requirements of paragraph 4.5 of this Part have been undertaken and submitted by the Operating Company and consented to by the Director.

4.1.17 The Operating Company shall make arrangements for consented to Works Contracts to be progressed and executed in accordance with the requirements of Schedule 6 Part 1 and Schedule 6 Part 4.

4.1.18 The Operating Company shall monitor all Operations and Works Contracts and provide a monthly report to the Director demonstrating compliance with the one year programme.

4.1.19 In the event of any deviation from the one year programme, the Operating Company shall provide a revised programme to the Director indicating how Operations will be brought back onto programme.

4.1.20 All written correspondence, including e-mail, raised by the Operating Company with the Director relating to Schemes, Bids and Orders, shall be attached to the relevant Scheme details recorded within the contract control and management function of the Integrated Roads Information System.

4.1.21 Where changes occur which have an effect on the financial value of Operations or Works Contracts, the Operating Company shall submit a revised Bid to the Director. The Director will consider such Bid and, at his discretion:

(i) may issue a further Order, or

(ii) consent to the revised Bid for the Works Contract to vary the value of any such Scheme.

4.1.22 The key dates and actions within the cycle of events for Scheme programme and budget preparation are those contained within Tables 4.1.22.A and 4.1.23.A of this Part. For roads structural maintenance Schemes, the requirements of Transport Scotland's *Annual Process for Roads Structural Maintenance* will apply for Scheme programme preparation. For other Schemes the key activities and dates within the cycle will be as follows:

Table 4.1.22.A Annual Process - Timetable

Stage	Action
1.	Operating Company shall supply to the Director by 15 August annually: **Draft 10 year, three year and one year programmes** – the Operating Company shall supply to the Director all of the information referred to in paragraph 4.1.11 of this Part.
2.	**Programme meeting** – the Director will meet the Operating Company and discuss the draft indicative programmes and estimates referred to in paragraph 4.1.11 of this Part by 15 September annually.
3.	**Indicative 10 year, three year and one year programmes and annual budget** – the Director will provide a copy of: (a) the indicative 10 year programme, and (b) the indicative three year programme, and (c) the indicative one year programme, to the Operating Company by 15 October annually together with an accepted indicative budget for the next Financial Year as referred to in paragraph 4.1.12 of this Part.
4.	**Annual detailed one year programme of Bids and financial profile** – the Operating Company shall submit to the Director by 15 November annually, revised Bids including: (a) detailed estimates for each Operation to be subject to an Order Scheme and each Works Contract, (b) a detailed one year programme, and (c) a detailed financial profile as referred to in paragraph 4.1.13 of this Part.
5.	**Orders** – the Director will issue sufficient Orders to the Operating Company to allow Operations to be undertaken within the next Financial Year by 15 January annually.
6.	**Orders** – the Director will, at his discretion, issue further Orders to the Operating Company for other Operations which he requires to be undertaken. Orders for further investigation, detailed Design, tender, procurement and construction of Schemes may be issued during the year.

4.1.23 For the first Annual Period only the following actions shall apply with revised latest dates as follows:

Table 4.1.23.A – Year 1 Annual Process Timetable

Stage	Latest Date	Action
1	10 weeks prior to Commencement of Service Date 1	The Director will provide the Operating Company with details of the current 10 year, three year and one year programmes to request revised Estimated Bid Values for all Schemes therein.
2	6 weeks prior to Commencement of Service Date 1	**Annual detailed one year programme of Bids and financial profile** – the Operating Company shall submit to the Director revised Bids including: (a) detailed estimates for each Operation to be subject to an Order, Scheme and Works Contract, (b) a detailed one year programme, and (c) a detailed financial profile as referred to in paragraph 4.1.13 of this Part.
3	2 weeks prior to Commencement of Service Date 1	**Orders** – the Director will issue sufficient Orders to the Operating Company to allow Operations to be undertaken within the next Financial Year.

4.2 Inspection and Assessments Types

4.2.1 The Operating Company shall consider the findings of the most up to date inspections and assessments as undertaken by the Director in determining future maintenance needs:

(i) road condition survey information provided through the Integrated Roads Information System,

(ii) results of further investigations, tests and surveys noted in this Part, carried out by the Operating Company as required by the *Design Manual for Roads and Bridges*,

(iii) asset, Defect and condition information recorded in the routine management and maintenance function of the Integrated Roads Information System referred to in Schedule 4 Part 2 and Schedule 7 Part 1,

(iv) Defects and condition information associated with bridges and other Structures recorded in the structures management function of the Integrated Roads Information System referred to in Schedule 7 Part 6 and Schedule 7 Part 7,

(v) the results of the Sideways Coefficient Routine Investigation Machine (SCRIM) skidding resistance testing, and

(vi) potential road safety Schemes as referred to in Schedule 8 Part 3.

4.3 Skid Resistance Management

4.3.1 The Operating Company shall appoint a Skid Resistance Manager in accordance with the requirements of Schedule 5 Part 4. The Skid Resistance Manager shall manage the Operating Company's skid resistance team.

4.3.2 The Operating Company shall comply with the requirements of *Design Manual for Roads and Bridges* for skid resistance management and the requirements and advice contained in the *Guidance Document for Implementing a Skid Resistance Policy for Transport Scotland.* If there is any conflict between these documents, the *Guidance Document for Implementing a Skid Resistance Policy for Transport Scotland* shall take precedence.

4.3.3 The Operating Company shall undertake investigations as described in the *Guidance Document for Implementing a Skid Resistance Policy for Transport Scotland* and record the information included in Appendix 1 of that document and submit the Records to the Director. During the course of this Contract, the Director may require the Operating Company to record this information in the Integrated Roads Information System.

4.3.4 After 31 October in each Annual Period, the Operating Company shall use the Integrated Roads Information System to generate the long-list of Sites to be investigated. The Operating Company shall assign each of the Sites a priority in accordance with the *Guidance Document for Implementing a Skid Resistance Policy for Transport Scotland*.

4.3.5 The Operating Company shall complete the initial investigations arising from the long-list no later than 28 February in each Annual Period and identify which Sites require detailed Site investigations.

4.3.6 The Operating Company shall proceed with detailed Site investigations of all Sites identified as requiring a detailed Site investigation. All Sites requiring a detailed Site investigation shall be investigated by the Operating Company by 15 August in each Annual Period.

4.3.7 Following completion of the detailed Site investigations, the Operating Company shall submit proposals for the erection, maintenance and removal of warning signs in accordance with the *Guidance Document for Implementing a Skid Resistance Policy for Transport Scotland* for the Director's consent. Following receipt of the Director's consent and subject to an Order, the Operating Company shall erect, maintain and remove such warning signs.

4.3.8 The Operating Company shall submit to the Director and the Performance Audit Group a skid resistance policy progress report in a form to be agreed with the Director before the 15th day of each month.

4.3.9 Before 31 August in each Annual Period, the Operating Company shall prepare and submit to the Director an annual report which summarises its activities in respect of skid resistance management. The Operating Company shall propose a form and content for the annual report to the Director for his consent. As a minimum, the report shall contain:

(i) the extent of Site category reviews completed and where changes are proposed,

(ii) a summary of the monthly progress reports submitted during the Annual Period,

(iii) the long-list of Sites indicating:

(a) where initial and detailed Site investigations have been completed,

(b) where action has and has not been taken,

(c) where Sites have been added to a programme of work,

(d) where changes to investigatory levels are proposed, and

(e) where further monitoring is proposed,

(iv) the Operating Company's view on any common findings or outcomes from the investigations which might influence future Transport Scotland policy decisions,

(v) identification of any conflicts within the Transport Scotland *Guidance Document for Implementing a Skid Resistance Policy for Transport Scotland*, or between the policy and other systems or processes relating to this Contract, and

(vi) suggestions for any aspects of skid resistance management which could be improved or developed.

4.3.10 The Operating Company's Skid Resistance Manager and a practitioner from its skid resistance team shall attend a Transport Scotland skid policy user group a minimum of four times in each Annual Period on dates to be notified by the Director.

4.4 Programme Development

4.4.1 The Operating Company shall use the current information available from inspections and assessments when developing one, three and 10 year maintenance programmes. The Operating Company shall record the one year programme within the contract control and management function of the Integrated Roads Information System. The 10 year and three year programmes shall be capable of being viewed using the contract control and management function of the Integrated Roads Information System.

4.4.2 The Operating Company shall undertake the development of the programmes to meet the dates referred to in Tables 4.1.22.A and 4.1.23.A of this Part. For roads structural maintenance Schemes, the requirements of Transport Scotland's *Annual Process for Roads Structural Maintenance* shall apply. The development of programmes shall not be delayed pending the results of any ongoing inspections or assessments.

4.4.3 The Operating Company's analysis of assessments and inspections shall be presented in sufficient detail and in a format acceptable to the Director, to allow the proposed maintenance Schemes to be assessed.

4.4.4 Guidance on methods of analysis is provided in the *Design Manual for Roads and Bridges*. Any further investigations required to clearly define Schemes and provide detailed estimates shall be identified as part of the Operating Company's proposed programme.

4.4.5 Where the analysis referred to in paragraph 4.4.3 of this Part indicates conditions that may be responsive to a number of different treatments or solutions, the Operating Company shall submit a list of the different treatments or solutions together with a relevant whole life costing analysis as part of providing its recommended option to the Director. Such information shall be in sufficient detail to be able to provide an indicative Estimated Bid Value and a quantification of the extent of the Operations or the Works that are needed. The Director will either consent or reject the recommendation.

4.4.6 Where a maintenance Scheme is identified that encompasses a section of road which is scheduled to be replaced by a planned Scheme, the Operating Company shall consider deferring the maintenance Scheme. In such situations the Operating Company shall consider and report to the Director on the implications of such a deferral. The Director will either consent or reject the deferral recommendations.

4.5 Statements of Intent and Value for Money Assessments

4.5.1 The Operating Company shall agree a programme annually with the Director for the submission of Statements of Intent in accordance with the requirements of Transport Scotland's *Annual Process for Roads Structural Maintenance* for Schemes under Work Series 0100. For all other Schemes, a programme shall be agreed annually with the Director in accordance with paragraphs 4.1.22 and 4.1.23 and Tables 4.1.22.A and 4.1.23.A of this Part.

4.5.2 The programme shall ensure that submission of Statements of Intent is in a timely and phased manner, at least 25 Working Days prior to the commencement of any works, allowing time for effective consideration of each submission by the Director. The Operating Company shall ensure that Statements of Intent are developed and submitted for years two to 10 programmes for consideration to accommodate any changes to programme or budget.

4.5.3 Transport Scotland's *Annual Process for Roads Structural Maintenance* provides exemplar Statements of Intent (Scheme approval) and Value for Money Assessments to ensure sufficient detail to demonstrate to the Director that the proposed Scheme represents value for money. Statement of Intent forms which shall be used for the appropriate types of Schemes and a Value for Money Assessment form which shall be used for Work Series 0300 Schemes when required by the financial thresholds are provided at Annex 4.1/A of this Part.

4.5.4 For all Schemes in excess of an Estimated Bid Value of £1,000,000, the feasibility of the Works Contractor sourcing at least 10 percent of the materials required for the Works from recycled, secondary or re-used sources shall be fully considered within Statements of Intent.

4.5.5 For all Schemes subject to submission of a Statement of Intent, the list of accessibility barriers present within each Scheme shall be discussed with the Director to determine if all barriers can be addressed within the available budget in accordance with the *Addressing Barriers to Accessibility on the Trunk Road Network: Guidance Note for Operating Companies*.

4.5.6 For all Schemes which may result in a permanent change to the design or operations of the public transport corridors or infrastructure associated with the public transport corridors the Operating Company shall consult and comply with the

Safety Management Steering Group. This shall represent a Scottish Ministers' Hold Point in the Quality Plan.

4.5.7 For proposed roads structural maintenance (pavement) Schemes within Work Series 0100, the Operating Company shall submit Statements of Intent and, where appropriate, Value for Money Assessments to the Director in accordance with the timescales and financial thresholds given in Transport Scotland's *Annual Process for Roads Structural Maintenance*.

4.5.8 For proposed structural maintenance (bridges general maintenance) Schemes within Work Series 1200 and with an Estimated Bid Value of more than £50,000, the Operating Company shall submit to the Director for consent:

(i) a Statement of Intent (Scheme approval) for those Schemes with an Estimated Bid Value of under £750,000 for Schemes on the Principal Crossings or under £350,000 for all other Schemes the Director's consideration using the outline form provided at Annex 4.1/A of this Part,

(ii) for all Schemes with an Estimated Bid Value of more than £750,000 for Schemes on the Principal Crossings or more than £350,000 for all other Schemes a Statement of Intent (Inception),

(iii) details of any departures from the *Design Manual for Roads and Bridges,* and *Roads for All: Good Practice Guide for Roads*,

(iv) an approval in principle, where appropriate under the *Design Manual for Roads and Bridges*,

(v) a list of all accessibility barriers recorded in the routine maintenance and management function of the Integrated Roads Information System on the DDA1 or DDA2 Scheme pro forma provided in Annex 4.1/I of this Part and any other barriers identified, with:

(a) the estimated cost to resolve each item,

(b) a recommendation itemising barriers that will be addressed within the proposed Scheme, and

(c) reasons for each item which is not being addressed in the proposed Scheme,

(vi) a value management score in accordance with the Highways Agency document *Maintenance and Making Better Use – Value Management of the Structures Renewal Programme – Amended for Transport Scotland*, and

(vii) any other relevant information in support of the Scheme.

4.5.9 Following review by the Director of Schemes within Work Series 1200 with an Estimated Bid Value of more than £750,000 for Schemes on the Principal Crossings or more than £350,000 for all other Schemes, the Operating Company shall complete the Statement of Intent (Scheme approval) for the Director's consent using the outline form provided at Annex 4.1/A of this Part.

4.5.10 When the Estimated Bid Value of a Work Series 1200 Scheme is more than £750,000 for Schemes on the Principal Crossings or more than £350,000 for all other Schemes a technical workshop shall be held between the Director and the Operating Company to discuss potential remedial options and proposals for further

studies and investigations. The Director retains the right to instigate a technical workshop for Schemes less than or equal to £750,000 for Schemes on the Principal Crossings or less than or equal to £350,000 for all other Schemes where deemed appropriate.

4.5.11 The Operating Company shall submit a written report containing the recommendations agreed at the technical workshop to the Director for consent within 25 Working Days of such workshop being held.

4.5.12 For proposed Schemes within Works Series other than 0100 and 1200, to be Ordered Operations or a Works Contract with an Estimated Bid Value of over £10,000, the Operating Company shall complete a Statement of Intent (Scheme approval) which shall contain details that confirm the need for the Scheme, using the outline form provided at Annex 4.1/A of this Part.

4.5.13 For proposed Schemes within Works Series, other than 0100 and 1200, to be Ordered Operations or a Works Contract with an Estimated Bid Value of over £50,000, the Operating Company shall complete a Statement of Intent (Inception) using the outline form provided at Annex 4.1/A of this Part.

4.5.14 Subject to an Order, the Operating Company shall undertake further studies and investigations as required by the Director. Such further studies and investigations may include, but not be limited to:

(i) analysis of the comparative costs of delaying Schemes, and

(ii) value engineering and value management assessments in accordance with Part 5 of the Scottish Government Transport and Planning Group's *Value for Money Manual*.

4.5.15 For proposed Schemes within Works Series other than 0100 and 1200, to be Ordered Operations or a Works Contract the Operating Company shall submit for the Director's consent, a Statement of Intent (Scheme approval) using the outline form provided at Annex 4.1/A of this Part. The Statement of Intent (Scheme approval) shall be accompanied with the Statement of Intent (Inception), Value for Money Assessments and any further studies and investigations where appropriate.

4.5.16 For proposed Schemes within Works Series other than 0100 and 1200, to be Ordered Operations or a Works Contract where the estimated value of any Scheme is greater than £750,000 for Schemes on the Principal Crossings or greater than £350,000 for all other Schemes, a technical workshop shall be held between the Director and the Operating Company to discuss potential remedial options and proposals for further studies and investigations. The Director retains the right to instigate a technical workshop for Schemes less than or equal to £750,000 for Schemes on the Principal Crossings or less than or equal to £350,000 for all other Schemes where deemed appropriate.

4.5.17 The Operating Company shall submit a written report containing the recommendations agreed at the technical workshop to the Director for consent within 25 Working Days of such workshop being held.

4.6 Programmes and Profiles

4.6.1 For the Financial Year in which Commencement of Service Date 1 arises, the Operating Company shall not be required to submit the draft programmes referred to

in paragraph 4.1.11 of this Part. Table 4.1.23.A of this Part specifies the steps and timescales to be followed for the first Financial Year.

4.6.2 For each subsequent Financial Year, the Operating Company shall prepare and submit draft one, three and 10 year programmes covering all proposed Schemes to the Director using the steps and timescales referred to in:

(i) Transport Scotland's *Annual Process for Roads Structural Maintenance*, and

(ii) Table 4.1.22.A of this Part.

4.6.3 Draft one year programmes shall contain the Schemes to be undertaken for Core Operations, Ordered Operations and Works Contracts proposed for the next Financial Year. Draft three and 10 year programmes shall contain all proposed Schemes for Operations at individual locations, or which are route based, or which are proposed as Works Contracts.

4.6.4 The Operating Company shall create and record within the contract control and management function of the Integrated Roads Information System, the detailed one year programme and financial profile to allow activity monitoring and appropriate financial control by the Director. This shall be in a format and at a level of detail in accordance with that shown at Annex 4.1/B of this Part.

4.7 Bids

4.7.1 When submitting the detailed one year programme, the Operating Company shall also submit Bid reports to the Director for the next Financial Year that complement the detailed one year programme. This shall be done within the timescale referred to in Transport Scotland's *Annual Process for Roads Structural Maintenance* and Table 4.1.22.A of this Part.

4.7.2 A Bid shall contain the information shown at Annex 4.1/G (4) and (5) of this Part.

4.7.3 The Operating Company shall seek consent from the Director through Works Contract Instructions for:

(i) developments in a Works Contract that lead or may lead to changes in cost or value as soon as they become apparent to the Engineer or Project Manager or equivalent, and

(ii) changes or expected changes in the bills of quantities, programme, milestone schedules and the like allowed for in the Works Contract that may materially affect the final cost or value of the Works Contract,

in accordance with the requirements stated in Schedule 6 Part 1.

4.7.4 In addition to the submission of the annual detailed one year programme of Bids to the Director, further Bids may be submitted by the Operating Company at any time during the Financial Year. Further Bids submitted during the Financial Year shall relate to:

(i) amending existing Bids, either in terms of work content or value, or

(ii) additional Schemes.

4.7.5 When a further Bid relates to an additional Scheme, the Operating Company shall submit the Bid to the Director at least 25 Working Days before the proposed

Scheme commencement date. Such Schemes shall not commence until consent to the Bid has been given by the Director.

4.7.6 The Operating Company shall identify each element of an Estimated Bid Value, as to Design, investigation and construction, to enable the element to be consented to separately at the Director's sole discretion.

4.7.7 Any element(s) inserted for Design, procurement, supervision and management of Schemes, shall be subject to the following:

(i) for all Schemes with an Estimated Construction Value of no more than £50,000 the element for Design (excluding Scheme Investigations) is deemed included within relevant monthly sums, and

(ii) for all Schemes with an Estimated Construction Value of more than £50,000 the element for Design (excluding Scheme Investigations) shall be the appropriate percentage rate(s) stated in Schedule 2 Part 2.

4.7.8 Subject to an Order, the Operating Company shall undertake Scheme Investigations.

4.8 Orders for Operations and Works Contract Instructions

4.8.1 An Order may contain one or more Schemes. Each Scheme within an Order shall, as a minimum, contain the information shown at Annex 4.1/G (6) of this Part.

4.8.2 There are two categories of Scheme which operate differently with regard to the use of Scheme Identifiers:

(i) Schemes where the Scheme Identifier remains the same over the complete period of the Scheme and may cover a number of Financial Years. These shall be Site or route specific Schemes generally related to structural pavement maintenance, planned general repair, technical survey, strategic road safety, minor improvement and general bridge maintenance, together with all Schemes undertaken as Works Contracts, and

(ii) Schemes where the Scheme Identifier relates only to the Financial Year of the Order.

Should the Operating Company have any doubt as to the category of a Scheme, it shall seek written clarification from the Director.

4.8.3 Where Operations for a Scheme have not been completed within the Financial Year, the Operating Company shall issue a Bid for the next Financial Year to cover the completion of such Operations. Operations which are undertaken in one Financial Year shall not be inserted into a Statement using an Order from a previous Financial Year, unless the Operating Company is instructed to do so by the Director.

4.8.4 Orders for Schemes with an Estimated Bid Value of less than £750,000 for Schemes on the Principal Crossings or less than £350,000 for all other Schemes shall be issued by the Director based upon the Bids submitted by the Operating Company.

4.8.5 The Director retains the right to generate Scheme Identifiers and issue Orders that are not based upon Bids submitted by the Operating Company.

4.8.6 The Director may vary the work content, extent and value of a Scheme by issuing a further Order.

4.8.7 Schemes with an Estimated Bid Value of more than £750,000 for Schemes on the Principal Crossings or more than £350,000 for all other Schemes shall be approved and controlled in accordance with paragraph 4.1.16 of this Part through the issue of a Works Contract Instruction by the Director.

4.8.8 The Director will issue Works Contract Instructions through the contract control and management function of the Integrated Roads Information System based upon Bids submitted by the Operating Company. The Director retains the right to generate Scheme Identifiers and issue Works Contract Instructions that are not based upon Bids submitted by the Operating Company.

4.8.9 A Works Contract Instruction can contain one or more Schemes. Each Scheme within a Works Contract Instruction shall, as a minimum, contain the information shown at Annex 4.1/G (7) of this Part.

4.8.10 The Director may vary the work content, the extent and the value of a Scheme which is the subject of a Works Contract Instruction by issuing a further Works Contract Instruction.

4.9 Further Detailed Enquiries

4.9.1 The Operating Company shall submit any requests for clarifications regarding Operations to be undertaken via a Further Detailed Enquiry to the Director. All clarifications sought verbally or electronically shall be confirmed by the issue of a Further Detailed Enquiry within two Working Days of the clarification being sought.

4.9.2 A Further Detailed Enquiry shall contain as a minimum the information shown at Annex 4.1/G (10) of this Part.

4.9.3 The Director will have sole discretion as to whether or not it is appropriate to issue a response to a Further Detailed Enquiry.

4.9.4 In those cases where a general enquiry is being made through a Further Detailed Enquiry, the routine services activity Scheme and Order shall be used. The routine services activity Work Code shall be 0701.

4.10 Further Detailed Directions

4.10.1 The Director will issue a Further Detailed Direction to the Operating Company either in response to a Further Detailed Enquiry, or when considered appropriate, to clarify or provide further details in respect of existing Orders.

4.10.2 A Further Detailed Direction shall be treated by the Operating Company as if it was an Order issued under this Contract.

4.10.3 A Further Detailed Direction will contain, as a minimum, the information shown at Annex 4.1/G (11) of this Part.

4.10.4 The Director will have sole discretion as to whether or not it is appropriate to issue a Further Detailed Direction in response to a Further Detailed Enquiry.

4.10.5 When a Further Detailed Enquiry or Further Detailed Direction is issued, the Order register shall be updated to identify that a dependent Further Detailed Enquiry or Further Detailed Direction exists.

4.10.6 Within 10 Working Days of the completion of the Further Detailed Direction, the Operating Company shall enter the date that it completed all parts of the Further Detailed Direction.

4.11 Scheme Completion and Closure

4.11.1 For all Core Operations within the annual programme, the contract control and management function of the Integrated Roads Information System will insert a Core Operations Closure Date 14 days after the end of the Annual Period.

4.11.2 The Operating Company shall record within the contract control and management function of the Integrated Roads Information System:

(i) the actual date when all Operations within each individual Scheme subject to an Order have been completed, within five Working Days of actual completion of the Operations. This date shall be known as the Scheme Completion Date, and

(ii) the actual date when all Further Detailed Directions within each individual Scheme have been completed.

4.11.3 Schemes shall not be recorded as complete until all Further Detailed Directions have been completed and the "Director objects" flag in the contract control and management function of the Integrated Roads Information System has been changed to "no" by the Director.

4.11.4 The Operating Company shall record within the contract control and management function of the Integrated Roads Information System the date on which it considers that all costs for a Scheme subject to an Order have been included in a Statement. This date shall be known as the Scheme Closure Date. The Scheme Closure Date shall be logged as soon as possible but in any case no later than 56 days from the Scheme Completion Date being logged as referred to in paragraph 4.11.2 of this Part.

The Operating Company shall not be entitled to claim any further costs for a Scheme after the Scheme Closure Date.

4.11.5 The Director will monitor the performance of the Operating Company with regards to the period between the completion of Schemes and finalisation of costs within Statements.

4.11.6 Should the Operating Company not log a Scheme Closure Date within 56 days of a Scheme Completion Date being logged, the contract control and management function of the Integrated Roads Information System shall enter that date automatically on the 56th day as the Scheme Closure Date and prevent the Operating Company from entering any further costs against the Scheme.

The contract control and management function of the Integrated Roads Information System shall allow the Director to lift this bar at his sole discretion.

4.11.7 The Operating Company shall provide a status report giving reasons for active Schemes not having a Scheme Completion Date to the Director, copied to the Performance Audit Group, quarterly on the 14th day of the month in each Annual Period.

4.11.8 Within five Working Days following completion of the Scheme, the Operating Company shall provide the Director with the completed DDA1 or DDA2 Scheme pro forma provided in Annex 4.1/I of this Part, noting the actual construction cost and confirming which barriers were addressed.

4.11.9 The Operating Company shall provide to the Director quarterly reports in each Annual Period summarising the barriers to accessibility that have been addressed to date and related costs.

4.12 Oral Orders

4.12.1 On receipt of an oral Order, the Operating Company shall issue a Confirmation of Oral Order with a Bid to cover the Operations which are the subject of such oral Order to the Director by 10:00 hours of the next Working Day. A Confirmation of Oral Order shall, as a minimum, contain the information stated in Annex 4.1/G (8) of this Part.

4.12.2 Within one Working Day of receipt of a Confirmation of Oral Order and the supporting Bid, the Director will:

(i) issue an Order accepting the Bid as submitted and respond to the Confirmation of Oral Order with a Further Detailed Direction, or

(ii) issue an Order revising the Bid as submitted and confirm the changes made using a Further Detailed Direction, or

(iii) issue a Further Detailed Direction explaining why he considers that an oral Order has not been issued.

4.12.3 Should the Operating Company for any reason not issue a Confirmation of Oral Order and Bid to cover an oral Order within the timescale described in paragraph 4.12.1 of this Part or should the Director for any reason not undertake one of the actions referred to in paragraph 4.12.2 of this Part within the relevant timescale, then such Order shall be deemed to be terminated with immediate effect and the Operating Company shall terminate the relevant Operations as quickly as possible.

4.13 Operating Company Operations Instructions

4.13.1 The Operating Company shall issue Operations Instructions for the undertaking of all Operations. The information to be contained in an Operations Instruction is stated in Annex 4.1/G (13) of this Part.

4.13.2 The Operating Company shall use the contract control and management function of the Integrated Roads Information System to issue Operations Instructions to its Operations personnel and sub-contractors.

4.13.3 All Operating Company depots and sub-offices shall have the capacity to issue paper copies of Operations Instructions to Operations personnel omitting the series and items within the Schedule of Rates and Prices. The paper Site copy of each Operations Instruction shall include a section allowing Site changes to Operations to be recorded together with the reasons for such changes.

4.13.4 For Work Series Codes 0100, 0300, 0800, 0900, 1200, and 9802, (other than for those Operations Instructions raised in respect of Category 1 Defects), any Operations Instruction shall have an estimate of the principal distance for the Scheme inserted within it in accordance with the requirements of Annex 4.1/G (23) of this Part.

4.13.5 The Operating Company shall record all changes on each Site Operations Instruction including any changes to the Operations undertaken or to the quantity of

work undertaken. All such changes shall be recorded at the Site either prior to, or at the completion of, the Operations.

A copy of this Site Operations Instruction shall be retained in the depot sub-office with a copy returned to the Central Office within five Working Days of the Operation being completed.

4.13.6 An Operating Company authorised member of staff shall sign off each Site Operations Instruction to verify that the nature and extent of the Operations shown on the Operations Instruction, including any changes, were necessary and were undertaken satisfactorily.

Each Site Operations Instruction shall be countersigned by the Operating Company's authorised manager responsible for the Operations.

4.13.7 The Operating Company shall record in the contract control and management function of the Integrated Roads Information System all measurements, including changes to Operations Instructions and reasons for differences to estimated quantities which have been recorded on the Site copy of the Site Operations Instruction, within five Working Days of completion of the Operations.

4.13.8 Where the Operating Company wishes to undertake a number of Operations on Site related to different Scheme Identifiers at the same location, it may issue a Consolidated Operations Instruction containing a number of Site Operations Instructions. Each Consolidated Operations Instruction shall be issued with a unique consecutive identifier number.

4.14 New Rates

4.14.1 Where the Operating Company considers that the items within the Schedule of Rates and Prices are not applicable to the Operations to be undertaken and proposes to use:

(i) rates or prices deduced from applicable rates and prices as referred to in Schedule 1, or

(ii) rates or prices by measurement and valuation in accordance with fair rates and prices as referred to in Schedule 1, or

(iii) a Lump Sum Quotation as referred to in Schedule 1,

it shall use the procedure described at paragraphs 4.14.2 to 4.14.8 of this Part.

4.14.2 The Operating Company shall submit to the Director:

(i) a proposed item description, a unit of measurement and a rate or price deduced from applicable rates and prices, or

(ii) a rate or price in accordance with fair rates and prices, with a supporting calculation of the build up of such rate or price, or

(iii) a quotation supported by calculations showing the build-up of the price. For the purposes of this paragraph 4.14 and the contract control and management function of the Integrated Roads Information System, a quotation shall be considered as a single rate of £1 and with a quantity of the quotation value and a unit of 'sum'.

4.14.3 The Director will review the wording of the item description. If the Director considers that existing rates and prices contained in the Schedule of Rates and Prices are not applicable to the Operations, he will insert a suitable description together with a new series or item number and a unit of measurement into the Schedule of Rates and Prices held within the contract control and management function of the Integrated Roads Information System.

4.14.4 The Director will fix a rate or price, in consultation with the Operating Company, if considered necessary. This shall be called the fixed rate or price. The Director will insert such fixed rate or price into the Schedule of Rates and Prices held within the contract control and management function of the Integrated Roads Information System.

4.14.5 Where the Director fixes a rate or price he will supply a mass conversion factor for each relevant new Schedule of Rates and Prices item. Where no rate or price is supplied then a zero factor value will be inserted.

4.14.6 Where a fixed rate or price is held within the contract control and management function of the Integrated Roads Information System, it shall remain in place unless it has been reviewed and changed by the Director and a determined rate or price is notified.

4.14.7 The Operating Company shall validate the Operations Instruction and insert it into the next Statement.

4.14.8 Where the Operating Company undertakes Operations which were unforeseen at the time of the issue of the Operations Instruction and it considers that the series or items within the Schedule of Rates and Prices do not cover the scope of the unforeseen Operations, it may propose the use of:

(i) rates or prices deduced from applicable rates and prices as referred to in Schedule 1, or

(ii) rates or prices by measurement and valuation in accordance with fair rates and prices as referred to in Schedule 1, or

(iii) a Lump Sum Quotation as referred to in Schedule 1.

In such a situation, the requirements of paragraph 4.14.2 of this Part shall be submitted to the Director within five Working Days of the Scheme Completion Date.

4.15 Operating Company Statements for Payment Purposes

4.15.1 The Statement shall have two parts. Part A will hold those sums eligible for payment by the Director to the Operating Company. Part B will hold any sums deemed by the Director to be in dispute at the date of the Statement. The Operating Company shall prepare and record the following two reports within the contract control and management function of the Integrated Roads Information System:

(i) the simplified Statement report referred to in Annex 4.1/D of this Part, and

(ii) a SEAS Statement report allocating all costs within the Statement to the Scottish Executive accounting system codes.

These reports, together with supporting documentation for Operations that are paid under time works schedule, shall form the Statement for each month.

Where any element of any Statement is identified by the Director as a disputed element, the Performance Audit Group, on behalf of the Director, shall transfer any such elements from Part A to Part B of the Statement and create a Payment Notified Record. The transfer from Part A to Part B of the Statement for each disputed element shall not change the Scheme Identifier and Work Code.

Payment in respect of Statements submitted by the Operating Company will be made by the Director using the contract control and management function of the Integrated Roads Information System by raising a Payment Notified Record in accordance with the functionality and roles stated in Annex 4.1/G (15) of this Part. The Operating Company shall confirm payment through the contract control and management function of the Integrated Roads Information System by a Payment Received Record in accordance with Annex 4.1/G (16) of this Part.

4.15.2 All Operating Company Statements in the format referred to in this Part shall be submitted in Electronic Copy to the Director and the Performance Audit Group. Such Statements shall be supported by the other Statement reports referred to in paragraph 4.15.1 of this Part logged within the contract control and management function of the Integrated Roads Information System.

4.15.3 The Operating Company shall retain all supporting cost measurement documentation related to Operations for which Statements have been prepared. This documentation shall be held for a period of at least six years after the end of the Non-Conformance Liability Period.

4.16 9901 Activation

4.16.1 Where the Operating Company has notified an additional claim for payment in accordance with Schedule 1, the Operating Company shall activate a Bid showing the Estimated Bid Value to allow the creation of a Scheme Identifier. Such an activation shall be known as a 9901 Activation. Subject to the other provisions of this paragraph of this Part, the activation of a 9901 Activation shall not entitle the Operating Company to any payment. The information requirements for 9901 Activations are stated in Annex 4.1/G (21) of this Part.

4.16.2 A 9901 Activation will be deemed to be disputed by the Director. The Operating Company shall place a Scheme created under a 9901 Activation in Part A of the Statement. Where any such part of a Scheme continues to be identified by the Director in Statements as disputed, the Performance Audit Group shall transfer any such part from Part A to Part B of the Statement. The transfer from Part A to Part B of the Statement for each disputed part of a Scheme shall not affect the Scheme Identifier and Work Code 9901.

4.16.3 When the Director decides that any Scheme created under a 9901 Activation or any part of any such Scheme is no longer disputed, he will notify the Operating Company accordingly, in writing. On receipt of such notification, the Operating Company shall:

(i) create and issue a new Bid and Scheme Identifier to the Director, using the Work Code 9902. The Bid shall include reference to the original Scheme Identifier created under the 9901 Activation and the appropriate value against the new Scheme Identifier, and

(ii) submit a revised Bid for the original Scheme created under the 9901 Activation, reducing the Estimated Bid Value by the equivalent of the Estimated Bid Value of the new Scheme.

The Operating Company shall create the Bid for the new Scheme and a 9902 Activation for the revised Bid for the original Scheme.

4.16.4 If the 9901 Bid continues to have an Estimated Bid Value and if a Claim Notification is not received by the Director before the expiry of the period described in Clause 10.8.2 of Schedule 1, on expiry of this period the 9901 Activation shall be set to zero by the Operating Company on receipt of a written notification from the Director.

4.17 Operating Company Financial Management Flexibility

4.17.1 The requirements of this paragraph allow the Operating Company to manage changed circumstances found on Site and ensure continued delivery of Operations on Site. The Director retains the right to withdraw the provisions of paragraph 4.17.5 of this Part from this Contract, on either a temporary or permanent basis. In the event of such a withdrawal, all resulting costs of whatsoever nature shall be borne by the Operating Company.

4.17.2 The requirements of this paragraph 4.17 of this Part do not apply to:

(i) Works Contracts which shall be procured, supervised, managed and monitored as referred to in Schedule 6 Part 1, or

(ii) Core Operations.

4.17.3 The Operating Company shall undertake the financial management and monitoring of the Operations at individual Scheme level for the Total Order Value of Scheme within the Financial Year.

4.17.4 The following procedures shall apply:

(i) if any Scheme seems likely to exceed the Total Order Value of Scheme within the Financial Year referred to in the latest Order, as indicated by the cumulative value of associated Operations Instructions for such Scheme, the Operating Company shall issue a revised Bid to the Director immediately for the Scheme, setting out the reasons for the increase in costs,

(ii) this revised Bid shall be accompanied by a revised Bid for other Schemes within the same Work Series to produce a matching saving. The cumulative value of associated Operations Instructions shall be the total of all Operations Instructions that have been measured against that Scheme added to the total of all Operations Instructions that have been issued against that Scheme but not yet measured,

(iii) if any Scheme seems likely to be less than the Total Order Value of Scheme within the Financial Year referred to in the latest Order, as indicated by the cumulative value of associated Operations Instructions, the Operating Company shall issue a revised Bid to the Director immediately for such Scheme, setting out the reasons for the decrease in costs, and

(iv) this revised Bid shall be accompanied by a revised Bid for Operations where the unused budget may be used.

4.17.5 When the Operating Company requires to authorise a variation to the scope of the Operations within a Scheme at a specific Site that may result in additional costs not exceeding 10 percent of the Total Order Value of Scheme within the Financial Year, each variation within the Financial Year, referred to in the latest Order, may be incurred by the Operating Company without the prior written consent of the Director.

Within two Working Days of having issued such authorisation, the Operating Company shall issue a revised Bid for the Scheme showing the increased Estimated Bid Value to the Director, setting out the reasons for such increase in costs. This shall be accompanied by a revised Bid for other Schemes within the same Work Series to produce a matching saving.

Within five Working Days of receipt of the revised Bid, the Director will issue a further Order to cover the increase and revise other Schemes as appropriate.

4.17.6 Notwithstanding the Total Order Value of Scheme within the Financial Year, the Operating Company shall deal with Incidents in compliance with the Scottish Ministers' Requirements.

4.17.7 With the exception of the allowances made in this Part with regard to Incidents, where the final valuation of a Scheme made by the Operating Company exceeds the Total Order Value of Scheme within the Financial Year, the Director will not be obliged to pay any excess costs over and above the Total Order Value of Scheme within the Financial Year.

4.18 Works Contractor Financial Control

4.18.1 Paragraphs 4.7 and 4.20 of this Part state the Director's requirements for the Operating Company to:

(i) use the contract control and management function of the Integrated Roads Information System in seeking Bid approval,

(ii) issue Works Contractors' payment applications and payment certification forms (CC1A) referred to in Schedule 6 Part 1, and

(iii) issue forms for the payment of monies to Works Contractors for Works Contracts.

Annex 4.1/G (17) of this Part specifies the information to be held within the contract control and management function of the Integrated Roads Information System in respect of Works Contracts.

4.18.2 The procedures for the financial control of Works Contractors' payment applications are referred to in Schedule 6 Part 1.

4.19 Payment of Works Contractors

4.19.1 The Operating Company shall submit to the Director an Electronic Copy and one paper copy of all original Works Contractors' payment applications and payment certification forms (CC1A) referred to in Schedule 6 Part 1. These shall be submitted to:

Transport Scotland
Finance and Corporate Services Directorate
Accounts Payable and Administration Team – TRBO
9th Floor, Buchanan House
58 Port Dundas Road
Glasgow
G4 0HF

4.19.2 The Operating Company shall issue the supporting Certificates (CCII and CCIII) referred to in Schedule 6 Part 1 where appropriate and store the same on the contract control and management function of the Integrated Roads Information System.

4.19.3 The Operating Company shall enter into the contract control and management function of the Integrated Roads Information System copies of all tender reports and draft tender document Certificates as referred to in Schedule 6 Part 1.

4.19.4 On the completion of the Works for a Works Contract, the Operating Company shall enter the appropriate series or item number related to the Work Code for the Scheme, and the appropriate quantity, into the contract control and management function of the Integrated Roads Information System in the form given in Annex 4.1/F of this Part.

4.20 Financial Monitoring and Forecasting Process

4.20.1 The Operating Company shall undertake financial monitoring and forecasting to generate reports using the contract control and management function of the Integrated Roads Information System and the data contained therein. All reports shall be available to be read by the Director and Performance Audit Group.

4.20.2 There are three main areas of financial reporting which shall be addressed within the contract control and management function of the Integrated Roads Information System:

(i) annual programmes including monthly Operations Instruction and Works Contract activity predictions,

(ii) monthly updates of the value of Statements, the value of Operations and Works Contract activity carried out and the re-profiling of monthly expenditure profiles, and

(iii) monthly consolidated financial reports in the form given in Annex 4.1/E of this Part, detailing all Statements submitted by the Operating Company and payment applications submitted by Works Contractors.

4.20.3 During each Financial Year, the Operating Company shall review, update and complete monitoring forms and record them in the contract control and management function of the Integrated Roads Information System no later than 10 Working Days after the last day of each calendar month. All costs and estimated costs for Schemes entered on the monitoring form shall exclude Value Added Tax and Contract Price Fluctuation.

4.20.4 When completing the monthly reporting forms, the Operating Company shall include changes to the value of estimates for Schemes.

4.20.5 The Operating Company shall attend monthly programming meetings with the Director and discuss any changes to the value of estimates for Schemes with a view to the Operating Company and Director using the contract control and management function of the Integrated Roads Information System to bid for and consent to any required changes to the Annual Programme and budget.

4.20.6 The Operating Company shall include documented procedures as part of the Management System that include the production and monitoring of the accuracy of the Estimated Bid Values to ensure the accuracy of the time and financial outturn estimates for Schemes provided to the Director.

Should monitoring indicate that Estimated Bid Values have been produced which are not accurate, the Operating Company shall implement any required changes, including changes required by the Director, to these procedures to improve the accuracy of the estimates.

4.21 Carbon Reporting

4.21.1 The Operating Company shall produce carbon emissions reports, providing the carbon factor score for material usage and transportation in Schemes within the one year Programme. Such reports shall be produced by the Operating Company on a quarterly and annual basis showing carbon scoring for individual Schedule of Rates and Prices items on a quarterly-to-date and annually-to-date basis.

4.21.2 The output requirements for carbon reporting by the contract control and management function of the Integrated Roads Information System are shown in Annexes 4.1/G (23) and 4.1/H of this Part together with their associated appendices.

4.22 Damage to Crown Property

4.22.1 The Operating Company shall comply with the requirements stated in Annex 4.1/G (18) of this Part.

4.23 Professional Services Register

4.23.1 The Operating Company shall comply with the requirements stated in Annex 4.1/G (22) of this Part.

This is Annex 4.1/A to Schedule 4 Part 1 referred to in the foregoing Agreement between Scottish Ministers and Amey LG Limited.

SCOTTISH MINISTERS' REQUIREMENTS

SCHEDULE 4 PART 1

FINANCIAL AND CONTRACT MANAGEMENT

ANNEX 4.1/A – Statement of Intent and Value for Money forms

SCOTTISH MINISTERS' REQUIREMENTS

SCHEDULE 4 PART 1

FINANCIAL AND CONTRACT MANAGEMENT

ANNEX 4.1/A – Statement of Intent and Value for Money forms

Figure 4.1.A.1 **Statement of Intent (SOI) Form: Structural Maintenance**

Figure 4.1.A.2 **Statement of Intent (SOI) Form: Minor Improvement**

Figure 4.1.A.3 **Statement of Intent (SOI) Form: Planned Maintenance Resurfacing**

Figure 4.1.A.4 **Statement of Intent (SOI) Form: Other Assets**

Figure 4.1.A.5 **Value for Money Assessment Form: Non-Structural Maintenance Schemes**

Figure 4.1.A.1 Statement of Intent (SOI) Form: Structural Maintenance

Statement of Intent (SOI) Form: Structural Maintenance

1. Scheme Name	Click here to enter Scheme Name.		
2. Scheme ID	Enter Scheme ID.	**4. SoI Revision**	Revision No.
3. Scheme Manager Ref	Enter IRIS Scheme Manger Reference.	**5. Work Year**	Work Year

SCHEME LOCATION

6. Road	Road.	**7. Location description**	Location Description.

8. Network referencing (from IRIS)	**Link/Section**	**Start Chainage**	**End Chainage**	**Length(m)**
	Start Section.	Start chainage.	End chainage.	Length.
	Subsequent section.	Start chainage.	End chainage.	Length.
	Subsequent section.	Start chainage.	End chainage.	Length.
	Subsequent section. (Add more rows if required)	Start chainage.	End chainage.	Length.
			Scheme Length(m)	Length.

SCHEME DETAILS

9. Traffic flow	**AADT/AADF**		**% HGV**	**Year of count**
	Traffic Measure	AADT/AADF value.	%HGV.	Count year.
10. Other relevant site details	Enter details of any other relevant Engineering or network details that may influence the design or implementation of the works. E.g. Drainage details, Edge of pavement details, VRS, Structures, Environmental factors.			

CONDITION ASSESSMENT

11. Construction Detail and Recorded Maintenance	Enter Information about construction records and last recorded maintenance.
12. IRIS / Visual Survey Justification for Scheme	Enter IRIS / Visual survey justification for scheme. Insert findings from the detailed visual survey to validate SERIS data. Describe the reasoning for progressing this location as a potential scheme following the initial findings. Confirm the extents of the scheme have been reviewed and are appropriate.

13. IRIS Report Detail, Routine Maintenance History, Accident data and HD28	**RMMS Defect Data**				
	No. of C/way Defects	**Current financial year**	**Last 3 full financial years**		
		Financial Year	Financial Year	Financial Year	Financial Year
	CAT1 Defects				
	CAT2 Defects				
	IRIS Accident Data				
	No. of Injury Accidents	**Current financial year**	**Last 3 full financial years**		
		Financial Year	Financial Year	Financial Year	Financial Year
	Total No. of Injury Accidents				
	Wet Only				
	Skid Only				
	Wet Skid				
	Describe RMMS defect information (No. CAT1 and CAT2, Carriageway defects and other relevant defects) routine maintenance history, extent of current routine maintenance and Accident data. .				
	Describe any relevant accident information or state “No accidents”.				
	Describe any relevant HD28 sites, in particular state if there are any HD28 sites from the current or previous years with a recommendation to carry out treatment, Include any relevant Secondary Investigations reports in the Appendix.				
FURTHER INVESTIGATION					
14. Scope, intended purpose and cost of any proposed further investigation and design works	Enter details, scope and cost estimates of all investigation and design works required to complete SoI(sa). E.g. Coring and DCP, FWD, GPR, utilities investigation, Drainage survey, other surveys and Design.				
	Estimated Investigation Cost	Estimated Inv Cost			
POTENTIAL TREATMENT					
15. Potential Treatment Options	Provide detail of any preliminary treatment options that have been considered based upon the available condition data.				
16. Potential Sustainability Treatment Options	Provide detail of any potential sustainable treatment options that have been identified and will be considered and investigated.				

APPROVAL TO UNDERTAKE FURTHER INVESTIGATION

17. Approval to undertake the further investigation works as outlined above NB. If no further investigation is required then please complete and submit the full form SOI(sa)	**Operating Company Representative name**	**Signature**	**Date**
	Transport Scotland Representative name	**Signature**	**Date**

SUMMARY OF MAINTENANCE NEED

18. Summary of findings from further investigation works (if applicable)	If coring was undertaken did cores confirm IRIS Construction records are correct?	Yes/No/Na
	If "No" has a Corrective MSD been submitted	Yes/No/Na
	Have the scheme extents changed following investigation	Yes/No/Na
	If "Yes" has Section 8 above been amended	Yes/No/Na
	If "Yes" has Scheme Manager – Section details been updated	Yes/No/Na
	Document the findings of the investigation(s) to provide defect details including construction detail. .	
19. Deterioration mechanism(s) and probable cause(s)	Provide detail on the deterioration mechanisms of the pavement. This should identify the probable cause of the defects present.	
20. Justification for Works	The justification for works shall contain a clear assessment of why the works are deemed to be necessary and shall refer to all supplied condition data from IRIS (see model format), accident data, visual surveys, drainage surveys, site investigations, RMMS defects and shall show locations of structures and highlight any associated non-pavement works required as part of the scheme. Pavement assessments shall be in accordance with DMRB Volume 7 Chapter 3 HD29/94, HD30/99, HD28/04, Value for Money guidance and others as appropriate. All available data shall be attached to the Statement of Intent. Where the scheme contains –ve SCRIM difference, all relevant HD28/04 investigation data shall be supplied.	

PROPOSED OPTIONS

21. Sustainability Options Considered	This section should report sustainable options that have been considered also including discussion of opportunities for low carbon / recycling.
22. Do Something Option	Details of Do Something treatment(s) for pavements and other assets within the scheme that have been considered.
23. Do Minimum Option	Details of Do Minimum maintenance required if scheme is not funded.

24. Other Options Considered	Treatment options that have been considered including the Reduced Do Something.			
25. Whole Life Costing Results	**Option Title**	**Discounted WLC (£)**	**Discounted Works Cost(£)**	**Comments**
	Do Something			
	Do Minimum			
	Add other options and more lines (if required).			

PROPOSED WORKS

26. Proposed Works	Provide detail of the Proposed Works based upon the data provided. .		
27. Preliminary Value Management Score		**Weighting**	**Un-weighted Score**
	Safety	**0.3**	
	Journey Time Reliability	**0.2**	
	Environmental Sustainability	**0.1**	
			VfM Indicator
	Value for Money	**0.4**	
	Importance Ranking	Importance Ranking	
28. Disability Discrimination Act (DDA)	*We confirm that barriers to accessibility have been considered and the DDA proforma has been signed off for this scheme by both the Operating Company and Transport Scotland*	☐ Tick to confirm	
	Enter any reason why box was not ticked or any other relevant information.		
29. Network Operations Equipment	Network Operation Equipment affected?	Choose an item.	
	If Yes, Enter Details of Network Operations Equipment and works required.		

30. Proposed Works Cost Estimates

Year	Activites	Estimated Cost
2016/2017	Investigation	£ -
2016/2017	Design	£ -
2016/2017	Construction	£ -
2016/2017	Other xxx	£ -
2016/2017	xxx	£ -
	TOTAL	**£ -**

31. Attached information	**Mandatory:**		**Other attachments (list):**	
	Visual Condition Survey	☐ Tick to confirm	Core Logs	☐ Tick to confirm

	Scheme Photographs	☐ Tick to confirm	
	IRIS Data Graphs	☐ Tick to confirm	
	WLC/VfM report	☐ Tick to confirm	

APPROVAL OF STATEMENT OF INTENT

33. Statement of Intent Agreement: Type and Extent of Pavement and Non-Pavement Treatments	**Operating Company Representative name**	**Signature**	**Date**
	Transport Scotland Representative name	**Signature**	**Date**

SOI DOCUMENT HISTORY

Revision number	Date issued	Comments

Figure 4.1.A.2 Statement of Intent (SOI) Form: Minor Improvement

Enter Scheme Name Title

Enter Scheme ID.

Statement of Intent (SOI) Form: Minor Improvement

TRANSPORT SCOTLAND

1. Scheme Name	Click here to enter Scheme Name.				
2. Scheme ID	Enter Scheme ID.	**3. SoI Revision**	Revision No.		
4. Work Year	Work Year	**5. Work Code**	0901 Individual Improvement Schemes	**6. Work Type**	e.g. Straitening, drainage etc.

SCHEME LOCATION

7. Road	Road.	**8. Location description**	Location Description. E.g. 100m west of Junction 'A' to 150m east on junction 'B'.
9. Network referencing (from IRIS)	**Start**	**Section**	Start Section.
		Chainage	Start chainage.
	Intermediate	**Section(s)**	Intermediate section(s).
	End	**Section**	End Section.
		Chainage	End chainage.

SCHEME DETAILS

10. Carriageway x Section	Cway X Section.	**12. Traffic flow**	**AADT**	**% HGV**	**Year of count**
11. Scheme length (m)	Scheme length.		AADT.	%HGV.	Count year.
13. Background	Include (where applicable) the history of scheme, construction records, recent planned maintenance, accident statistics (inl. Common trends), local contentious issues etc.				
14. Defect history	Summarise the unplanned interventions that have been required at this site in the last 3 years.				
15 Traffic management restrictions	Enter details of any TM restrictions. E.g. Narrow carriageway width, Noise sensitive location, access route for schools or critical infrastructure, Abnormal load route Etc				
16. Network Operations equipment affected	☐ YES (provide details) ☐ NO	Enter details of any Net Ops. Equipment.			
17. Other relevant site details	Enter details of any other relevant Engineering or network details that may influence the design or implementation of the works. E.g. Drainage details, Edge of pavement details, VRS, Structures, Environmental factors.				

SCHEME APPRAISAL (i)

18. Identification of problem	Describe how and why a potential scheme was identified at this site. Summarise relevant condition data held in IRIS. State if/how the existing IRIS data has been validated or supplemented.
19. Key objectives of proposed scheme	Refer to Scottish Transport Appraisal Guidance (STAG).
20. Initial treatment options/ solutions that have been considered to solve the problem	Describe the initial treatment options / solutions identified

FURTHER INVESTIGATION

21. Further Investigation required?	☐ YES ☐ NO (GIVE details)	Describe further investigations required.	
22. Scope, intended purpose and cost of any proposed further			**Cost of I and D**

SoI – Minor Improvement (template v1.word) 1 of 3 11/08/2014

Enter Scheme Name Title | Enter Scheme ID.

investigation and design works	Enter details of scope of investigation and design works. E.g. Coring and DCP, utilities investigation, Drainage survey, Design. Add additional rows in necessary.		
	Indicative Construction cost		
23. Approval to undertake the further investigation works (SOI(i) ONLY) as outlined above	**Operating Company representative name**	**Signature**	**Date**
	Transport Scotland representative name	**Signature**	**Date**
SUMMARY OF MAINTENANCE NEED			
24. Summary of findings from further investigation works (if applicable)	Summarise findings of investigation.		
25. Statement of justification for proposed scheme	Based on the above, summarise why the proposed scheme is justified and cross-reference to supporting data (condition, accidents, drainage, defects etc.) all of which must be supplied with the SOI.		
26. Likely consequences of not undertaking proposed works (i.e. "Do Nothing" works option)	Provide an assessment of the risks associated with a "Do Nothing" approach.		
27. Description of "Do Minimum" works option	Description of "Do Minimum" Works .		
28. Description of "Do Something" works option(s)	Description of "Do Something" works.		
29. Scottish Transport Appraisal Guidance (STAG) criteria - describe how the various works options impact upon the following.....			
Environment			
Safety			
Economy			
Integration			
Accessibility & social inclusion			
30. Whole life costing	WLC analysis shall be provided in accordance with S4P3 and Value for Money guidance. All relevant data shall be attached. Allowances for Risk and Uncertainty must be documented.		
PROPOSED WORKS			
31. Works summary	Provide summary of works proposed.		
32. Other schemes that may be affected by this proposal	Include details of opportunities to combine schemes/works (hybridisation).		
33. Sustainable options considered (if scheme is > £50,000)	☐ Tick to confirm Comments	Where feasible consideration shall be given to retaining, re-using or recycling existing materials where possible.	

SoI – Minor Improvement (template v1.word) 2 of 3 11/08/2014

Enter Scheme Name Title | Enter Scheme ID.

34. Disability Discrimination Act (DDA)	*We confirm that barriers to accessibility have been considered and the DDA proforma has been signed off for this scheme by both the Operating Company and Transport Scotland*		☐ Tick to confirm
35. Revised/ Total cost estimate	**Year (20__/20__)**	**Activity (description)**	**Cost (£)**
	Work Year	E.G. Survey work, scheme preparation, Scheme design, site works, supervision, construction.	
	Work Year	E.G. Survey work, scheme preparation, Scheme design, site works, supervision, construction.	
	Work Year	E.G. Survey work, scheme preparation, Scheme design, site works, supervision, construction.	
		TOTAL:	
36. Proposed monitoring plan	Outline the key measures of how the success of the scheme will be measured. This may include accident statistics and comparison back to the original Transport Scotland Planning Objectives.		
37. Evaluation plan	Make reference to the First Year Rate of Return or other method used to justify the scheme. Provide proposals on when, and how monitoring will be undertaken.		
38. Approval to undertake patching works as outlined above	**Operating Company representative name**	**Signature**	**Date**
	Transport Scotland representative name	**Signature**	**Date**
39. Attached information	***List:***		

SOI DOCUMENT HISTORY

Revision number	Date issued	Comments

SoI – Minor Improvement (template v1.word) 3 of 3 11/08/2014

Figure 4.1.A.3 Statement of Intent (SOI) Form: Planned Maintenance Resurfacing

Enter Scheme Name Title | Enter Scheme ID.

Statement of Intent (SOI) Form: Planned Maintenance Resurfacing

TRANSPORT SCOTLAND

1. Scheme Name	Click here to enter Scheme Name.		
2. Scheme ID	Enter Scheme ID.	**3. SoI Revision**	Revision No.
4. Work Year	Work Year	**5. Work Code**	Choose an item.

SCHEME LOCATION

6. Road	Road.	**7. Location description**	Location Description.
8. Network referencing (from IRIS)	**Start**	**Section**	Start Section.
		Chainage	Start chainage.
	Intermediate	**Section(s)**	Intermediate section(s).
	End	**Section**	End Section.
		Chainage	End chainage.

SCHEME DETAILS

9. Carriageway x Section	Cway X Section.	**11. Traffic flow**	**AADT**	**% HGV**	**Year of count**
10. Scheme length (m)	Scheme length.		AADT.	%HGV.	Count year.
12. Traffic management restrictions	Confirm if scheme is within any App 1/17 restrictions and enter details of any other TM restrictions. E.g. Narrow carriageway width, Noise sensitive location, access route for schools or critical infrastructure, Abnormal load route Etc.				
13. Network Operations equipment affected	☐ YES (provide details ☐ NO	Enter details of any Net Ops. Equipment.			
14. Other relevant site details	Enter details of any other relevant Engineering or network details that may influence the design or implementation of the works. E.g. Drainage details, Edge of pavement details, VRS, Structures, Environmental factors.				

CONDITION ASSESSMENT

15. Summary defect photographs attached?	☐ YES ☐ NO (GIVE details)	Enter summary of photographs or reasons for not attaching photographs.
Comments	Describe why this has been highlighted as a potential scheme. Provide a description of any routine condition data that is held for this asset or a description of any initial surveys that led to its promotion as a potential scheme.	
16. Pavement condition data from IRIS	Summarise the routine condition data (SCRIM, Deflectograph, and SCANNER) held within IRIS. State how it justifies the proposed scheme	
17. Maintenance history/overview	Summarise the related interventions (planned and unplanned) that have been required at this site in the last three years	

FURTHER INVESTIGATION

18. Further Investigation required?	☐ YES ☐ NO (GIVE details)		
19. Scope, intended purpose and cost of any proposed further investigation and design works	Enter details of scope of investigation and design works. E.g. Coring and DCP, utilities investigation, Drainage survey, Design. Add additional rows in necessary.		**Cost of I and D**
		Indicative Construction cost	
20. Approval to undertake the further	**Operating Company representative name**	**Signature**	**Date**

SoI – Planned maintenance resurfacing (template v1.word) 1 of 3 11/08/2014

Enter Scheme Name Title | Enter Scheme ID.

investigation works (SOI(i)ONLY) as outlined above NB. If no further investigation is required then please complete the full form SOI(sa) and submit			
	Transport Scotland representative name	**Signature**	**Date**
SUMMARY OF MAINTENANCE NEED			
21. Summary of findings from further investigation works (if applicable)	Summarise findings of investigation.		
22. Main driver for proposed works	Identify the single main reason why patching is required.		
23. Deterioration mechanism(s) and probable cause(s)	Provide an assessment of how and why the pavement is deteriorating.		
24. Patching schedule attached? (Showing chainage, XSP, Patch depth, surfacing material)	☐ YES ☐ NO (provide details)		
PROPOSED WORKS			
25. Sustainable options considered (if scheme is > £50,000)	☐ Tick to confirm Comments	Where feasible consideration shall be given to retaining, re-using or recycling existing materials where possible.	
26. Disability Discrimination Act (DDA)	*We confirm that barriers to accessibility have been considered and the DDA proforma has been signed off for this scheme by both the Operating Company and Transport Scotland*		☐ Tick to confirm
27. Attached information	**Mandatory:**		**Other attachments (list):**
	Visual Condition Survey	☐ Tick to confirm	
	Scheme Photographs	☐ Tick to confirm	
	Supporting data from RMMF	☐ Tick to confirm	
	If the scheme is proposed on the basis of SCRIM then all HD28 investigatory records must be attached.		
	If total scheme > £50,000:		
	VFM assessment	☐ Tick to confirm	
28. Revised/ Total cost estimate	**Year (20__/20__)**	**Activity (description)**	**Cost (£)**
	Work Year	E.G. Survey work, scheme preparation, Scheme design, site works, supervision, construction.	
	Work Year	E.G. Survey work, scheme preparation, Scheme design, site works, supervision, construction.	
	Work Year	E.G. Survey work, scheme preparation, Scheme design, site works, supervision, construction.	
		TOTAL:	
29. Approval to undertake patching	**Operating Company representative name**	**Signature**	**Date**

SoI – Planned maintenance resurfacing (template v1.word) 2 of 3 11/08/2014

works as outlined above			
	Transport Scotland representative name	**Signature**	**Date**

SOI DOCUMENT HISTORY		
Revision number	**Date issued**	**Comments**

Figure 4.1.A.4 Statement of Intent (SOI) Form: Other Assets

Enter Scheme Name Title

Enter Scheme ID.

Statement of Intent (SOI) Form: Other Assets		**1. Asset type**	Choose an item.
			If "Other" enter Asset type.
2. Scheme Name	Click here to enter Scheme Name.		
3. Scheme ID	Enter Scheme ID.	**4. Sol Revision**	Revision No.
5. Work Year	Work Year	**6. Work Code**	Choose an item.

TRANSPORT SCOTLAND

SCHEME LOCATION			
7. Road	Road.	**8. Location description**	Location Description. E.g. 100m west of Junction 'A' to 150m east on junction 'B'.
9. Network referencing (from IRIS)	**Start**	**Section**	Start Section.
		Chainage	Start chainage.
	Intermediate	**Section(s)**	Intermediate section(s).
	End	**Section**	End Section.
		Chainage	End chainage.
10. Asset specific location reference or identifiers (if applicable)	Provide details of other asset identifiers e.g. electrical asset ref.		

SCHEME DETAILS					
11. Carriageway x Section	Cway X Section.	**13. Traffic flow**	**AADT**	**% HGV**	**Year of count**
12. Scheme length (m)	Scheme length.		AADT.	%HGV.	Count year.
14. Asset construction records & maintenance history	Provide summary of the construction details (incl. year built). Record when the asset was last subject to planned maintenance (if applicable).				
15 Traffic management restrictions	Enter details of any TM restrictions. E.g. Narrow carriageway width, Noise sensitive location, access route for schools or critical infrastructure, Abnormal load route Etc				
16. Network Operations equipment affected	☐ YES (provide details	Enter details of any Net Ops. Equipment.			
	☐ NO				
17. Other relevant site details	Enter details of any other relevant Engineering or network details that may influence the design or implementation of the works. E.g. Drainage details, Edge of pavement details, VRS, Structures, Environmental factors.				

CONDITION ASSESSMENT					
18. Transport Scotland *"Trunk Road Condition Manual"* - Condition Category					
Select the single most representative option	**A. Excellent ☐**	**b. Good ☐**	**c. Fair ☐**	**D. Poor ☐**	**E. very poor ☐**
19. Summary defect photographs attached?	☐ YES ☐ NO (GIVE details)	Enter summary of photographs or reasons for not attaching photographs.			
Comments (including, where applicable the number of defective units)	Describe why this has been highlighted as a potential scheme. Provide a description of any routine condition data that is held for this asset or a description of any initial surveys that lead to its promotion as a potential scheme.				
20. Defect history / overview	Summarise the unplanned maintenance innervations that have been required at this site in the last three years				

FURTHER INVESTIGATION		
21. Further Investigation required?	☐ YES ☐ NO (GIVE details)	Describe further investigations required.

Sol – Planned maintenance resurfacing (template v1.word) 1 of 3 11/08/2014

Enter Scheme Name Title | Enter Scheme ID.

22. Scope, intended purpose and cost of any proposed further investigation and design works	Enter details of scope of investigation and design works. E.g. Coring and DCP, utilities investigation, Drainage survey, Design. Add additional rows in necessary.		**Cost of I and D**
	Indicative Construction cost		
23. Approval to undertake the further investigation works (SOI(i)ONLY) as outlined above NB. If no further investigation is required then please complete the full form SOI(sa) and submit	**Operating Company representative name**	**Signature**	**Date**
	Transport Scotland representative name	**Signature**	**Date**

SUMMARY OF MAINTENANCE NEED

24. Summary of findings from further investigation works (if applicable)	Summarise the further investigation works findings. Attach the results to the submitted SoI.
25. Main driver for proposed works	Identify the single main reason why maintenance is required.
26. Deterioration mechanism(s) and probable cause(s)	Provide an assessment of how and why the asset is deteriorating.
27. Statement of justification for proposed works	Provide a clear assessment of why the works are deemed to be necessary.
28. Likely consequences of not undertaking proposed works	Provide an assessment of the risks associated with a "Do Nothing" approach.

PROPOSED WORKS

29. Works summary	**Chainage (m)**	**XSP**	**Works description**
			Insert more lines if required.
30. Sustainable options considered (if scheme is > £50,000)	☐ Tick to confirm Comments	Where feasible consideration shall be given to retaining, re-using or recycling existing materials where possible.	
31. Disability Discrimination Act (DDA)	*We confirm that barriers to accessibility have been considered and the DDA proforma has been signed off for this scheme by both the Operating Company and Transport Scotland*		☐ Tick to confirm
32. Attached information	***List:***		
	Year (20__/20__)	**Activity (description)**	**Cost (£)**

SoI – Planned maintenance resurfacing (template v1.word) 2 of 3 11/08/2014

Enter Scheme Name Title | Enter Scheme ID.

33. Revised/ Total cost estimate	Work Year	E.G. Survey work, scheme preparation, Scheme design, site works, supervision, construction.	
	Work Year	E.G. Survey work, scheme preparation, Scheme design, site works, supervision, construction.	
	Work Year	E.G. Survey work, scheme preparation, Scheme design, site works, supervision, construction.	
		TOTAL:	
20. Approval to undertake patching works as outlined above	**Operating Company representative name**	**Signature**	**Date**
	Transport Scotland representative name	**Signature**	**Date**

SOI DOCUMENT HISTORY		
Revision number	**Date issued**	**Comments**

SoI – Planned maintenance resurfacing (template v1.word) 3 of 3 11/08/2014

Figure 4.1.A.6 Statement of Intent (SOI) Form :Landscaping Assets

Statement of Intent (SOI) Form:

Landscaping Assets

1. Scheme Name	Click here to enter Scheme Name.		
2. Scheme ID	Enter Scheme ID.	**3. SoI Revision**	Revision No.
4. Work Year	Work Year	**5. Work Code**	Choose an item.

SCHEME LOCATION

6. Road	Road.	**7. Location description**	Location Description including. E.g. Region/area/place name or '100m west of Junction A to 150m east on junction B'.

8. Network referencing (from IRIS)	**Link/Section**	**Start Chainage**	**End Chainage**	Length
	Start Section.	Start chainage.	End chainage.	Length.
	Subsequent section. (Add more rows if required)	Start chainage.	End chainage.	Length.
			Scheme Length(m)	Length.

SCHEME DETAILS

9. Summary of proposal	☐ Maintenance Works ☐ New Scheme/development
	Description of the proposal as a potential scheme or maintenance activity. This should include a statement describing the general works involved, the extent covered, the intended outcome and the relationship with the wider local setting of the road.
10. Summary condition including photographs	☐ Photos attached (if no photos are attached provide an explanation below).
	Describe why this has been highlighted as a potential scheme. Provide a description of any routine condition data that is held for this asset, including summary of recent inspections, defects raised and condition ratings, or a description of any initial surveys that led to its promotion as a potential scheme.
11. Link to Landscape Strategy / Development Plan	Describe the relationship with the Landscape Strategy / Landscape Development Plan and include reference from documents

SCHEME OBJECTIVES AND PRIORITY

12. Scheme Objectives	☐ General amenity	☐ More efficient/appropriate maintenance	☐ Road safety/reliability

	☐ Improved biodiversity/nature conservation	☐ Sustainability/Climate change	☐ Other (Describe below)
	Select all appropriate objectives from the list above and describe the general objectives, refer to Schedule 7 Part 4 cl 1.4.4.		
13. Scheme development	☐ TS instruction	☐ ORI (PAG)	☐ Landscape Development Plan
	☐ Result of inspection (OC/Landscape Architect	☐ Local/Community pressure	☐ Other (Describe below)
	Select all relevant options from the list above and provide relevant background information regarding the source of the scheme and the issues it will address.		

SCHEME COST ESTIMATES

	Year (20__/20__)	Activity (description)	Cost (£)
14. Cost estimate	Work Year	E.G. Survey work, scheme preparation, Scheme design, site works, supervision, construction.	
	Work Year	E.G. Survey work, scheme preparation, Scheme design, site works, supervision, construction.	
	Work Year	E.G. Survey work, scheme preparation, Scheme design, site works, supervision, construction.	
		TOTAL:	

SUPPORTING DOCUMENTATION

	Mandatory:		Other attachments (list):	
15. Attached information.	Location/context plan(s)	☐ Tick to confirm	Sketches / design sections	☐ Tick to confirm
Refer to Schedule 7 Part 4 Clause 1.5.2	Detailed site plan(s)	☐ Tick to confirm	Third party representations	☐ Tick to confirm
	Scheme Photographs	☐ Tick to confirm		
	Inspection, defect and condition records	☐ Tick to confirm		

SCHEME APPROVAL

16. Scheme comments by Landscape Architect	Additional comments in support of the scheme by the Landscape Architect..		
17. Scheme endorsed by Landscape Architect	**Landscape Architect name**	**Signature**	**Date**
18. Approval to undertake landscaping works as outlined above	**Operating Company representative name**	**Signature**	**Date**
	Transport Scotland representative name	**Signature**	**Date**

SOI DOCUMENT HISTORY

Revision number	Date issued	Comments

Figure 4.1.A.5 Value for Money Assessment Form: Non-Structural Maintenance Schemes

Value for Money Assessment

Option	Proposal	Proposal +	Proposal -	Do Nothing
Treatment Costs (£)				
Treatment Details				
Technical Solution				
Safety				
Impact on Network				
Sustainability				
Additional Comments				

Guidance notes on how to complete this assessment are provided over the page.

Guidance Notes

Table Heading	***Description of Requirement***	***Example response***
Treatment Cost	The anticipated works cost of the proposed work	-
Treatment Details	Details of proposed the proposed works should be provided in this box.	Machine laid surface course patched to remove badly fretted surface course in lane 1.
Technical Solution	The OC should highlight the technical benefits of the treatment and justify why the proposed treatment is most appropriate at this time	This treatment will replace the life expired surfacing and delay the need for structural maintenance for a period of approximately five years.
Safety	The OC should outline the benefits / risks that this treatment proposal will have.	Currently records show reactive maintenance interventions are occurring at a frequency of three per month and have risen rapidly over the last six months. Undertaking machine patching at this time will minimise the risk to road users and operatives as the condition of the surfacing will be improved and exposure to traffic management restrictions will be reduced.
Impact on Network	This section should look to assess the impact on the road network that the proposal will have.	Minimal off peak disruption is expected during the resurfacing works with no ongoing disruption foreseen compared to more frequent emergency interventions, that may be disruptive, if small scale hand patching is undertaken.
Sustainability	Environmental benefits of the proposed works should be highlighted.	The overall number of vehicle movements will be reduced if the resurfacing is undertaken in one hit reducing the amount of CO_2 released into the atmosphere.
Additional Comments	This box should be used for any additional justification that has not already been covered in the Value for Money Assessment.	There is potential to complete these works concurrently with drainage scheme 13/OC/XXX/XX reducing the overall amount of traffic management on the network.
Proposal	This should preferred maintenance solution	Machine laid surface course replacement in lane 1
Proposal +	This should be the "gold plated" maintenance solution and may in fact be a structural maintenance scheme	A 100mm inlay using TS2010 surface course will remove the need for future maintenance for the next 15 to 20 years.
Proposal -	This should be the do minimum works	Hand laid patches to address the worst of the defects
Do Nothing	This is to allow a comparison of the other treatments to be made against doing nothing at this time.	-

General

In addition to the technical information available in IRIS each Value for Money Assessment should utilise all available information e.g. RMMS intervention frequencies, accident statistics, complaints from road users / local residents.

This is Annex 4.1/B to Schedule 4 Part 1 referred to in the foregoing Agreement between Scottish Ministers and Amey LG Limited.

SCOTTISH MINISTERS' REQUIREMENTS

SCHEDULE 4 PART 1

FINANCIAL AND CONTRACT MANAGEMENT

ANNEX 4.1/B – Financial Profiling

SCOTTISH MINISTERS' REQUIREMENTS

SCHEDULE 4 PART 1

FINANCIAL AND CONTRACT MANAGEMENT

ANNEX 4.1/B – Financial Profiling

<OPERATING COMPANY>

Year .....

Financial Profile

Scheme ID	Route	OC/WC	Contract Description	Work Code	Apr	May	Jun	Jul	Aug	Sep	Oct	Nov	Dec	Jan	Feb	Mar	Total Operations Cost (£)	Total Works Cost (£)	Total Cost (£)
		OC																	
		WC																	
		OC																	
		WC																	
		OC																	
		WC																	
		OC																	
		WC																	
		OC																	
		WC																	
		OC																	
		WC																	
		OC																	
		WC																	
			Total		£0.00	£0.00	£0.00	£0.00	£0.00	£0.00	£0.00	£0.00	£0.00	£0.00	£0.00	£0.00	£0.00	£0.00	£0.00

<OPERATING COMPANY>

Year .....

Expenditure Profile

Scheme ID	Route	OC/WC	Contract Description	Work Code	Apr	May	Jun	Jul	Aug	Sep	Oct	Nov	Dec	Jan	Feb	Mar	Total Operartion Cost (£)	Ordered Value(£)	Total Works Cost (£)	Total Cost (£)
		OC																		
		WC																		
		OC																		
		WC																		
		OC																		
		WC																		
		OC																		
		WC																		
		OC																		
		WC																		
		OC																		
		WC																		
		OC																		
		WC																		
		OC																		
		WC																		
			Total		£0.00	£0.00	£0.00	£0.00	£0.00	£0.00	£0.00	£0.00	£0.00	£0.00	£0.00	£0.00	£0.00	£0.00	£0.00	£0.00

Discrete Schemes

Year ……

Operations Programme

CARRY OVER/RETENTIONS

Route	Scheme I.D.	Contract Description	Work Code	Start Design & Document Preparation	Design Complete (%)	Documents sent to PAG	Tender Issue	Award Works Contract	Start Operations or Works	Complete Operations or Works	Final Invoice /Statement Submitted	Current Year Estimated Costs
											Total	£0.00

This is Annex 4.1/C to Schedule 4 Part 1 referred to in the foregoing Agreement between Scottish Ministers and Amey LG Limited.

SCOTTISH MINISTERS' REQUIREMENTS

SCHEDULE 4 PART 1

FINANCIAL AND CONTRACT MANAGEMENT

ANNEX 4.1/C – Work Series and Codes

SCOTTISH MINISTERS' REQUIREMENTS

SCHEDULE 4 PART 1

FINANCIAL AND CONTRACT MANAGEMENT

ANNEX 4.1/C – Work Series and Codes

Work Series 0100 – Roads – Structural Pavement Maintenance

0101 Reconstruction

0102 Overlay

0103 Resurfacing

0104 Surface Dressing

0105 Provision of special anti skid treatment

Work Series 0200 – Roads –Maintenance

0201 Maintenance (monthly lump sum)

Work Series 0300 – Roads – General Repair and Maintenance

0301 Patching flexible roads

0302 Patching concrete roads

0303 Maintenance of footways and cycle tracks

0304 Raising and replacing existing kerbs

0305 Maintenance of safety fence

0306 Maintenance of pedestrian guard rails

0307 Maintenance of road traffic signals, signs and bollards

0308 Retaining wall under 1.5m

0309 Remedial earthworks to embankments & cuttings

0310 Drainage and culverts under 2m

0311 Road markings & reflector studs

0312 Fences, walls, screens and noise barriers

0313 Landscape and planting

0314 Pedestrian crossings and furniture

0315 Road lighting and electrical work

0316 New footways and cycle tracks

0317 Graffiti removal

0318 Routine Reactive Maintenance (monthly lump sum)

Work Series 0400 – Roads – Technical Surveys & Investigations

0401 Technical surveys and investigations

Work Series 0500 Roads – Winter Service

0501 Winter Service (monthly lump sum)

0502 Salt Supply – national resilience initiative

Work Series 0600 – Roads – Incidents

0601 Incidents not more than £10,000 (monthly lump sum)

0602 Incidents greater than £10,000

Work Series 0700 – Roads – Resource Costs

0701 Routine Services (monthly lump sum)

0702 Electricity charges

0703 Changes in Scope of Operations

Work Series 0800 – Roads – Strategic Road Safety

0801 Individual Strategic Road Safety Schemes

Work Series 0900 – Roads – Minor Improvement Schemes

0901 Individual Improvement Schemes

Work Series 1000 – Roads – Traffic Counts

1001 Traffic counts

1002 Network Operations

Work Series 1100 – Roads – General Expenditure

1101 General expenditure

Work Series 1200 – Bridges – General Maintenance

1201 Bridges and culverts 2 metres and over, retaining wall over 1.5 metres and other Structures

1202 Bridge strengthening

1203 Major bridges

1204 Silane treatment

1205 Protective coatings to steel Structures

Work Series 1300 – Bridges – Inspection, Assessment and Investigation

1301 Principal and General Inspections (monthly lump sum)

1302 Structural assessment

1303 Special investigations

Work Series 1400 – Bridges – General Expenditure

1401 General expenditure

Work Series 9800 – Roads and Bridges – Damage to Crown Property

9803 Damage repair & cost recovery service not more than £50,000

9804 Payment for damage repair greater than £50,000

Work Series 9900 – Roads and Bridges – Claims

9901 Claims for additional payment – not accepted by Director

9902 Claims for additional payment - accepted by the Director

This is Annex 4.1/D to Schedule 4 Part 1 referred to in the foregoing Agreement between Scottish Ministers and Amey LG Limited.

SCOTTISH MINISTERS' REQUIREMENTS

SCHEDULE 4 PART 1

FINANCIAL AND CONTRACT MANAGEMENT

ANNEX 4.1/D – Statement Reports

SCOTTISH MINISTERS' REQUIREMENTS

SCHEDULE 4 PART 1

FINANCIAL AND CONTRACT MANAGEMENT

ANNEX 4.1/D – Statement Reports

Simplified Statement Report Example

Part A

Scheme ID	Scheme Description	Amount £	Cumulative Amount £	Cumulative CPF £	Cumulative Amount Incl. CPF £
15/FB/0102/003	Roadworks Scheme – Example S/B overlay	5,150.00	5,150.00	370.00	5,520.00
15/FB/0102/007	Design of Discrete Roadworks Scheme	6,700.00	26,600.00	1,515.00	28,115.00
	Example overlay				
	Total Work Code	11,850.00	31,750.00	1,885.00	33,635.00
15/FB/0703/003	Routine Manager Activities	150.00	900.00	132.00	1,032.00
	Total Work Code	150.00	900.00	132.00	1,032.00
15/FB/1201/003	General Bridge Repair	817.60	3,270.40	150.00	3,420.40
	Total Work Code	817.60	3,270.40	150.00	3,420.40
	Total Value Part A	12,817.60	35,920.40	2,167.00	38,087.40
	Total Previously Billed Part A		23,511.60	1,902.90	25,414.50
	Less Part B Adjustments (PNR)		204.40	10.00	214.40
	Revised Total Previously Billed Part A		23,307.20	1,892.90	25,200.10
	Total Value for Month for PART A		12,613.20	274.10	12,887.30

Part B

15/FB/1201/003	General Bridge Repair	204.40	613.20		
	Total Work Code	204.40	613.20		
	Total Value Part B	204.40	613.20		
	Total Value to Date				
	Part A		35,920.40	2,167.00	38,087.40
	Part B		613.20	0.00	613.20
	Total Value for Unit		36,533.60	2,167.00	38,700.60

This is Annex 4.1/E to Schedule 4 Part 1 referred to in the foregoing Agreement between Scottish Ministers and Amey LG Limited.

SCOTTISH MINISTERS' REQUIREMENTS

SCHEDULE 4 PART 1

FINANCIAL AND CONTRACT MANAGEMENT

ANNEX 4.1/E – Financial Monitoring and Forecasting Reports

SCOTTISH MINISTERS' REQUIREMENTS

SCHEDULE 4 PART 1

FINANCIAL AND CONTRACT MANAGEMENT

ANNEX 4.1/E – Financial Monitoring and Forecasting Reports

TERM CONTRACT FOR THE MANGEMENT AND MAINTENANCE OF THE SCOTTSIH TRUNK ROAD NETWORK - FORTH BRIDGES UNIT CONSOLIDATED FINANCIAL REPORT – APPLICATION

Month being reported – 30 June 2016

Date of Issue – 14 July 2016

OPERATING COMPANY

Statement Number	Statement Date	Statement Value	CPF	Total Value (net of VAT)
		£	£	£
Total 2015/16	-	**15,000,000**	**1,000,000**	**16,000,000**
2016/17				
FB113	10/05/2016	1,000,000	100,000	1,100,000
FB114	08/06/2016	2,500,000	250,000	2,750,000
FB115	07/07/2016	1,500,000	125,000	1,625,000
Total 2016/17		**5,000,000**	**475,000**	**5,475,000**
Cumulative Operating Company		**20,000,000**	**1,475,000**	**21,475,000**

WORKS CONTRACTORS

Payment Application Number	Date Submitted	Recommended Payment Value		Total Value (net of VAT)
		£		£
Total 2015/16		**12,000,000**		**12,000,000**
2016/17				
April		1,956,000		1,956,000
May		2,536,000		2,536,000
June				
FBCOR009	08/06/2016	300,000		300,000
FBTHI017	10/06/2016	285,000		285,000
FBMDS005	05/07/2016	1,250,000		1,250,000
FBBDN025	06/06/2016	750,000		750,000
		2,585,000		2,585,000
Total 2016/17		**7,077,000**		**7,077,000**
Cumulative Works Contractors		**19,077,000**		**19,077,000**
Cumulative Expenditure for Unit				
2015/16		27,000,000	1,000,000	28,000,000
2016/17		12,077,000	475,000	12,552,000
Total to Date		**39,077,000**	**1,475,000**	**40,552,000**

TERM CONTRACT FOR THE MANGEMENT AND MAINTENANCE OF THE SCOTTSIH TRUNK ROAD NETWORK – FORTH BRIDGES UNIT

CONSOLIDATED FINANCIAL REPORT – PAYMENT

Month being reported – 30 April 2017

Date of Issue – 14 May 2017

OPERATING COMPANY

Statement Number	Statement Date	Cumulative Amount of Statement (1)	Omitted Amount Part B (2)	CPF (3)	Part A Amount (4) = ((1)+(3)) +/- (2)	Manual Adjustments (5)	Total Value (net of VAT) ((6)=(4))+/- (5)
		£	£	£		£	£
Total 2015/16	**–**	**15,750,000**	**(269,254)**	**1,075,000**	**16,555,746**	**72,354**	**16,628,100**
2016/17							
FB113	10/05/2016	1,000,000	75,340	100,000	1,175,340	84	1,175,424
FB114	08/06/2016	2,500,000	(71,804)	250,000	2,678,196		2,678,196
FB115	07/07/2016	1,500,000	52,814	125,000	1,677,814	400	1,678,214
FB116	11/08/2016	1,300,000	(128,114)	115,000	1,286,886		1,286,886
FB117	06/09/2016	1,355,000	66,100	120,000	1,541,100		1,541,100
FB118	04/10/2016	1,265,000	45,333	117,000	1,427,333		1,427,333
FB119	10/11/2016	1,854,000	(66,200)	175,000	1,962,800	69,350	2,032,150
FB120	09/12/2016	1,236,000	69,958	116,000	1,421,958		1,421,958
FB121	06/01/2017	1,584,000	50,250	130,000	1,764,250		1,764,250
FB122	05/02/2017	1,477,000	44,160	126,000	1,647,160		1,647,160
FB123	12/03/2017	1,799,000	(49,350)	200,000	1,949,650	(11,000)	1,938,650
FB124	08/04/2017	2,150,000	29,120	210,000	2,389,120		2,389,120
Accruals 2015/16		(750,000)	-	(75,000)	(825,000)	-	(825,000)
Accruals 2016/17		1,000,000	-	125,000	1,125,000	-	1,125,000
Total 2016/17		**19,270,000**	**117,607**	**1,834,000**	**21,221,607**	**58,834**	**21,280,441**
2017/18							
FB125	10/05/2017	2,000,000	-	200,000	2,200,000	-	2,200,000
Accruals 2015/16		(1,000,000)	-	(125,000)	(1,125,000)	-	(1,125,000)
Accruals 2016/17		-	-	-		-	
Total 2017/18		**1,000,000**	**-**	**75,000**	**1,075,000**	**-**	**1,075,000**
Cumulative Operating Company		**36,020,000**	**(151,647)**	**2,984,000**	**38,852,353**	**131,188**	**38,983,541**

CPF is calculated on the Part A Amount (column 4 above) i.e. the Cumulative Amount of the Statement less Part B.

WORKS CONTRACTORS

Payment Application Number	Date Submitted	Application for Payment Value	Amounts Omitted/Released (including Claims)		Payment Value (net of VAT)
		£	£		
Total 2015/16		**12,500,000**	**(500,000)**		**12,000,000**
April		1,956,000			1,956,000
May		2,536,000			2,536,000
June		2,585,000			2,585,000
July		1,652,000			1,652,000
August		1,470,000			1,470,000
September		102,000			102,000
October		1,070,000			1,070,000
November		658,000			658,000
December		423,000			423,000
January		105,000			105,000
February		305,000	500,000		805,000
March		690,000			690,000
Accruals 2015/16		(500,000)	-	-	(500,000)
Accruals 2016/17		650,000	-	-	650,000
Total 2016/17		**13,702,000**	**500,000**		**14,202,000**

2017/18							
April							
FBCOR010	15/04/2017	650,000		-	-	-	650,000
FBMDS006	25/04/2017	300,000		-	-	-	300,000
			950,000	-	-	-	950,000
Accruals 2015/16			-	-	-	-	
Accruals 2016/17			(650,000)	-	-	-	(650,000)
Total 2017/18			**300,000**	**-**	**-**	**-**	**300,000**
Cumulative Works Contractors			**26,502,000**		**0**		**26,502,000**
Cumulative Expenditure for Unit			Application	CPF	Omitted	Manual Adjust's	Payment
2015/16			28,250,000	1,075,000	(769,254)	72,354	28,628,100
2016/17			32,972,000	1,834,000	617,607	58,834	35,482,441
2017/18			1,300,000	75,000	-	-	1,375,000
Total to Date			**62,522,000**	**2,984,000**	**(151,647)**	**131,188**	**65,485,541**

Note – the following are definitions of terms used in these tables:

Accruals – these represent any sums which were claimed in one Financial Year but accounted for in a previous Financial Year. This information may require to be entered manually by the Operating Company but shall be compiled from information held within the contract control and management function of the Integrated Roads Information System.

Manual adjustments – this is when an amount is paid or deducted outwith the contract control and management function of the Integrated Roads Information System. Such amounts will be advised in writing by the Director and shall require to be entered manually by the Operating Company.

This is Annex 4.1/F to Schedule 4 Part 1 referred to in the foregoing Agreement between Scottish Ministers and Amey LG Limited.

SCOTTISH MINISTERS' REQUIREMENTS

SCHEDULE 4 PART 1

FINANCIAL AND CONTRACT MANAGEMENT

ANNEX 4.1/F – Works Contractor Series and Item Numbers

SCOTTISH MINISTERS' REQUIREMENTS

SCHEDULE 4 PART 1

FINANCIAL AND CONTRACT MANAGEMENT

ANNEX 4.1/F – Works Contractor Series and Item Numbers

Items Related to Work Codes to be Used When Coding Works Contracts

Work Code	Item Number		Description	Measurement Unit
Structural Pavement Maintenance				
0101	0700	01-9000	Reconstruction	sq m
0102	0700	02-9000	Overlay	sq m
0103	0700	02-9100	Resurfacing	sq m
0104	0700	04-9000	Surface Dressing	sq m
0105	0700	04-9100	Anti skid treatment	sq m
General Repair and Maintenance				
0301	0700	11-9000	Patching flexible roads	sq m
0302	0700	11-9100	Patching concrete roads	sq m
0303	1100	05-9000	Resurfacing footways & cycle tracks	sq m
0305	0400	10-9000	Replacement of wire rope safety fence	m
0305	0400	01-9000	Replacement of other safety fence	m
0305	0400	10-9100	New wire rope safety fence	m
0305	0400	01-9100	New other safety fence	m
0311	1200	03-9000	Replacement of road markings	m
0315	1300	01-9000	Replacement of lighting columns	No
0316	1100	05-9100	New footways and cycle tracks	sq m
Strategic Road Safety				
0801	0800	01-9000	Strategic Road Safety	No
Minor Improvement Schemes				
0901	0900	01-9000	Minor Improvement Scheme	No

Work Code	Item Number		Description	Measurement Unit
Bridges General Maintenance				
1201	1700	01-9000	Bridge or Structure maintenance	No
1202	1700	01-9100	Bridge strengthening	No
1203	1700	01-9200	Major bridges maintenance	No
1204	2000	01-9000	Silane treatment	No
1205	1900	02-9000	Protective coatings	No

This is Annex 4.1/G to Schedule 4 Part 1 referred to in the foregoing Agreement between Scottish Ministers and Amey LG Limited.

SCOTTISH MINISTERS' REQUIREMENTS

SCHEDULE 4 PART 1

FINANCIAL AND CONTRACT MANAGEMENT

ANNEX 4.1/G – Detailed Functions and Functionality of the Contract Control and Management Function of the Integrated Roads Information System

SCOTTISH MINISTERS' REQUIREMENTS

SCHEDULE 4 PART 1

FINANCIAL AND CONTRACT MANAGEMENT

ANNEX 4.1/G – Detailed Functions and Functionality of the Contract Control and Management Function of the Integrated Roads Information System

FUNCTIONS AND FUNCTIONALITY	ROLES OF PARTIES
1. One Year Programme and Financial Profiles Each one year programme and financial profile will be given a unique consecutive number by the contract control and management function of the Integrated Roads Information System. Operations and Works Contracts within a one year programme will contain the following fields for completion by the Operating Company: (i) Work Code, (ii) route number on all routes, (iii) Scheme Identifier, (iv) the Scheme manager reference from the Integrated Roads Information System where one exists, (v) Total Order Value of Scheme within the Financial Year, (vi) total Works Contract Instruction Value for the Scheme within the Financial Year, (vii) estimated value of Scheme in Financial Year, (viii) start and end dates or each category of Operations or Works, (ix) percentage Design complete, (x) tender documents to the Performance Audit Group date, (xi) tender issue date, (xii) tender award date, and (xiii) final Statement or invoice date. Group programmes as follows: (i) roads, (ii) bridges, (iii) minor improvements, and (iv) accident investigation and prevention. Each Scheme within a one year financial profile shall	The Operating Company can generate, revise and read draft programmes. The Operating Company can read, but not produce or revise consented-to versions. The Operating Company can create a copy of a consented-to version. The Director and the Performance Audit Group can revise draft programmes, generate consented-to programmes and read all programmes.

FUNCTIONS AND FUNCTIONALITY	ROLES OF PARTIES
contain the following fields: (i) Work Code, (ii) category of Operations or Works, (iii) route, (iv) Scheme Identifier, (v) description of Scheme, and (vi) profiled estimate of total Order and Works Contract Instruction value for each Scheme for each month and with total for Financial Year.	
2. Annual Budgets Annual budgets will be given for each of the following: (i) structural maintenance (roads), (ii) Core Operations (not requiring a Bid), (iii) strategic road safety, (iv) minor improvement Schemes, (v) Structures (bridges). Each annual budget will be divided between Ordered Operations, Core Operations and Works Contracts, each of which will be given a unique consecutive number by the contract control and management function of the Integrated Roads Information System. The contract control and management function of the Integrated Roads Information System will link each budget for Operations to Orders such that Orders against a budget cannot be issued in excess of that budget. The Operating Company shall generate and store annual budgets for all Operations and Works including a tag with date and time of issue and receipt and status, (draft number or consented to version).	The Director and the Performance Audit Group can generate, revise and read draft and indicative budgets. The Operating Company can read draft budgets at the discretion of the Director or the Performance Audit Group but can read all indicative budgets. The Operating Company cannot generate or revise any budgets.
3. Work Codes The contract control and management function of the Integrated Roads Information System will hold all Work Codes as shown at Annex 4.1/C of this Part or subsequently re-issued by the Director in a format which shall allow their use in the generation of other elements within the system such as Statements Bids Orders and Operations Instructions.	The Director and the Performance Audit Group can generate, revise and read Work Codes and SEAS codes. The Operating Company can read Work Codes and linked SEAS codes.

FUNCTIONS AND FUNCTIONALITY	ROLES OF PARTIES
4. Bids Each Bid will be given a unique consecutive number by the contract control and management function of the Integrated Roads Information System. The contract control and management function of the Integrated Roads Information System will allocate automatically a unique Scheme Identifier to each Scheme within a Bid which will identify the Unit. The Scheme Identifier numbering convention will be as follows: 16/FB/0301/001 16 – start year (in this case 2016) FB – Unit – FB, 0301 – Work Code 001 – Unique sequential number – three digits (XXX) range 001 to 999 Each Scheme within a Bid will contain the following fields for completion by the Operating Company: (i) the Scheme manager reference from the Integrated Roads Information System where one exists, (ii) Scheme Identifier, (iii) Scheme Identifier under Work Code 9901 where this Scheme Identifier replaces a Scheme Identifier created under Work Code 9901, (iv) route number or all routes, (v) Work Code, (vi) Structure reference number (if the Scheme relates to a Structure) from structures management function of the Integrated Roads Information System, (vii) locations – start and end of each link section and chainage, (viii) locations – the Ordnance Survey grid reference or latitude/longitude of the start and the end of the Scheme, (ix) description of location, (x) description of proposed Operations or Works, (xi) details of any restrictions, (xii) use of Professional Services and time works schedule rates where more than 50% of Estimated Bid Value,	The Operating Company can generate, revise and read Bids. The Director and the Performance Audit Group can generate, revise and read Bids.

FUNCTIONS AND FUNCTIONALITY	ROLES OF PARTIES
(xiii) possible inclusion of Scheme in carbon emission monitoring based upon Work Code classification including recording of principal distance, (xiv) proposed start and finish dates for each category of Operations or Works, and (xv) Estimated Bid Value. The Operating Company shall populate the contract control and management function of the Integrated Roads Information System with detailed information justifying a Scheme within a module and reference using the Scheme Identifier. The Operating Company shall be required to create a bid within the contract control and management function of the Integrated Roads Information System for any work remaining to be delivered from FETA's historical programme no later than six weeks prior to COSD1.	
5. Estimated Bid Value A Bid for a Scheme shall separately identify all of the potential costs of the Scheme including: (i) investigation, (ii) land acquisition, (iii) preparation of road orders, (iv) Design, (v) Operations on Site, (vi) supervision, and (vii) any other associated costs. It shall not include Value Added Tax or the costs of Contract Price Fluctuation. Each calculation of Estimated Bid Value within a Bid shall contain the following fields: (i) estimated value of Operations in each Financial Year, (ii) estimated value of Works costs in each Financial Year, (iii) estimated value of Scheme in each Financial Year, and	The Operating Company can generate, revise and read estimate of costs within Bids. The Director and the Performance Audit Group can revise and read estimate of costs Bids.

FUNCTIONS AND FUNCTIONALITY	ROLES OF PARTIES
(iv) estimated cumulative value of Scheme for all Financial Years. Estimated Bid Value shall be determined by the Operating Company as follows: (i) for Operations, the relevant rates and prices held within the contract control and management function of the Integrated Roads Information System shall be used with estimated quantities to develop the Estimated Bid Value, and (ii) for Works, rates and prices from recent similar Works Contracts shall be used with estimated quantities to develop the Estimated Bid Value. This total breakdown shall be included within each Estimated Bid Value. Annex 4.1/G (12) of this Part – Schedule of Rates and Prices - states that at award of this Contract, the Director may identify certain rates and prices to which shall be attached an H or L tag. These tags shall activate a flag called "High/Low Rate" when included as part of an Estimated Bid Value.	
6. Orders Each Operation will be given an Order number by the contract control and management function of the Integrated Roads Information System. This is a unique consecutive numbering system for the Unit. The Order numbering convention will be in the format set by the contract control and management function of the Integrated Roads Information System and shall include: (i) start year (in this case 2016), (ii) Unit – FB (iii) consecutive Order number. The contract control and management function of the Integrated Roads Information System will be used by the Director to generate Scheme Identifiers and issue standalone Orders based on Bids submitted by the Operating Company. It will also be used by the Director to generate free standing Orders not based on Bids. Each Scheme within an Order shall contain the following fields: (i) Scheme Identifier,	The Director can generate and read Orders. The Operating Company and the Performance Audit Group can read Orders.

FUNCTIONS AND FUNCTIONALITY	ROLES OF PARTIES
(ii) the Scheme manager reference from the Integrated Roads Information System where one exists, (iii) route number or all routes, (iv) Work Code, (v) Structure reference number (if the Scheme relates to a Structure), (vi) locations – start and end of each link section and chainage, (vii) locations – the Ordnance Survey grid reference or latitude/longitude of the start and the end of the Scheme, (viii) description of location, (ix) description of proposed Operations, (x) details of any restrictions, (xi) required start and finish dates for each Category of Operations or Works, (xii) Total Order Value of Scheme (can be a negative number), (xiii) Total Order Value of Scheme within the Financial Year, (xiv) Cumulative Total Order Value of Scheme to date, (xv) Scheme Completion Date, and (xvi) Scheme Closure Date. An issued Order will not be capable of being altered. Any changes will require the issue of a further Order by the Director. The Director may vary the work content, the extent or the value of a Scheme that is subject to an Order by issuing a further Order.	
7. Works Contract Instructions Each Works Contract Instruction will be given a unique Works Contract Instruction Number by the contract control and management function of the Integrated Roads Information System. This is a unique consecutive numbering system for the Unit. The Works Contract Instruction numbering convention will be as set by the contract control and management function of the Integrated Roads Information System and will include: (i) start year (in this case 2016), (ii) Unit – FB,	The Director can generate and read Works Contract Instructions. The Operating Company and the Performance Audit Group can read Works Contract Instructions.

FUNCTIONS AND FUNCTIONALITY	ROLES OF PARTIES
(iii) consecutive Works Contract Instruction number. The contract control and management function of the Integrated Roads Information System will be used by the Director to generate Scheme Identifiers and issue standalone Works Contract Instructions based on Bids submitted by the Operating Company. It will also be used by the Director to generate free standing Works Contract Instructions not based on Bids. Each Scheme within a Works Contract Instruction shall contain the following fields: (i) Scheme Identifier, (ii) the Scheme manager reference from the Integrated Roads Information System where one exists, (iii) route number or all routes, (iv) Work Code, (v) Structure reference number (if the Scheme relates to a Structure), (vi) locations – start and end of each link section and chainage, (vii) locations – the Ordnance Survey grid reference or latitude/longitude of the start and the end of the Scheme, (viii) description of location, (ix) description of proposed Operations, (x) details of any restrictions, (xi) required start and finish dates for each Category of Operations or Works, (xii) total Works Contract Instruction value for the Scheme (can be a negative number), (xiii) total Works Contract Instruction value for the Scheme within the Financial Year, (xiv) cumulative total Works Contract Instruction value for the Scheme to Date, (xv) Scheme Completion Date, and (xvi) Scheme Closure Date.	

FUNCTIONS AND FUNCTIONALITY	ROLES OF PARTIES
An issued Works Contract Instruction will not be capable of being altered. Any changes will require the issue of a further Works Contract Instruction by the Director. The Director may vary the work content, the extent or the value of a Scheme which is the subject of a Works Contract Instruction by issuing a further Works Contract Instruction.	
8. Confirmation of Oral Orders Each Confirmation of Oral Order shall contain the following fields: (i) unique Confirmation of Oral Order reference number, (ii) Trunk Road and Bus Operations contact who issued oral Order, (iii) date and time when oral Order was issued, (iv) Bid identifier associated with the Confirmation of Oral Order, (v) Scheme Identifier(s) included in supporting Bid, (vi) comments, and (vii) Operating Company contact name. The contract control and management function of the Integrated Roads Information System will allocate automatically a unique Confirmation of Oral Order reference number to each Confirmation of Oral Order.	The Operating Company can generate and read Confirmation of Oral Orders. The Director and the Performance Audit Group can read Confirmation of Oral Orders.
9. Scheme Completion or Closure The contract control and management function of the Integrated Roads Information System will enable the Operating Company to date tag a Scheme within an Order with the Scheme Completion Date. The contract control and management function of the Integrated Roads Information System will enable the Operating Company to date tag a Scheme within an Order with the Scheme Closure Date. Should a Scheme Closure Date not be input within 56 days of a Scheme Completion Date being input, the contract control and management function of the Integrated Roads Information System will on such 56th day automatically enter that date as the Scheme Closure Date and will bar the Operating Company from entering any further costs against the Scheme. There will be a facility to allow the Director to lift this bar at his discretion.	The Operating Company can generate and read Scheme Completion Dates and Scheme Closure Dates. The Director and the Performance Audit Group can read Scheme Completion Dates and Scheme Closure Dates.

FUNCTIONS AND FUNCTIONALITY	ROLES OF PARTIES
Where a Scheme relates to a monthly lump sum activity, if the Operating Company has not logged the Scheme Closure Date within 14 days of the end of the Financial Year, the contract control and management function of the Integrated Roads Information System will on such 14th day automatically enter that date as the Scheme Closure Date. The contract control and management function of the Integrated Roads Information System will allow the Director to record an objection to the final and conclusive amount claimed for any Scheme which has been tagged with a "Scheme Closure Date". The Director will subsequently amend the contract control and management function of the Integrated Roads Information System to show that he does not have an objection to the final and conclusive amount claimed by the Operating Company.	
10. Further Detailed Enquiries The contract control and management function of the Integrated Roads Information System will automatically allocate to each Further Detailed Enquiry a unique Further Detailed Enquiry reference number. Each Further Detailed Enquiry shall contain the following fields for Operating Company completion: (i) unique Further Detailed Enquiry reference number, (ii) subject heading, (iii) enquiry details, (iv) solutions or options being proposed, (v) requested date for response, (vi) Scheme Identifier to which the Further Detailed Enquiry refers, (vii) original Order or Works Contract Instruction number on which the Scheme was originally issued, (vii) Operating Company contact name, and (viii) Further Detailed Direction reference number of response. The issue of a Further Detailed Direction with a Further Detailed Enquiry number lodged in it willl tag the Further Detailed Enquiry as completed.	The Operating Company can generate and read Further Detailed Enquiries. The Director and the Performance Audit Group can read Further Detailed Enquiries.
It will be impossible to issue a Further Detailed Enquiry without a valid Scheme Identifier and valid Order or Works Contract Instruction.	

FUNCTIONS AND FUNCTIONALITY	ROLES OF PARTIES
11. Further Detailed Directions The Director will issue a Further Detailed Direction which will contain the following fields: (i) unique Further Detailed Direction reference number, (ii) Further Detailed Enquiry or Confirmation of Oral Order reference number if Further Detailed Direction is in response to a Further Detailed Enquiry or Confirmation of Oral Order, (iii) direction details, (iv) date for completion, (v) Scheme Identifier to which the Further Detailed Direction refers, (vi) original Order or Works Contract Instruction number on which the Scheme was originally issued, (v) Director contact name, (vi) actual Completion Date to be completed by the Operating Company on completion of the directions in the Further Detailed Direction, and (vii) the Director objects. This field defaults to Y when an actual Completion Date is entered. The contract control and management function of the Integrated Roads Information System will store all Further Detailed Directions generated and tag with date/time of issue and receipt.	The Director can generate and read Further Detailed Directions. The Operating Company and the Performance Audit Group can read Further Detailed Directions. The Operating Company can enter only the actual Completion Date.
12. Schedule of Rates and Prices The contract control and management function of the Integrated Roads Information System will hold all rates and prices contained in Schedule 2 Part 2 together with any subsequently inserted fixed or determined rates and prices in a format which allows their use in the generation of other elements function such as Statements Bids and Operations Instructions. Each rate and price shall be capable of having a tag attached which shall indicate the rate or price as being either high (H) or low (L). At award of this Contract the Director will identify certain rates and prices to which shall be attached an H or L tag which shall activate a flag when shown within an estimate of costs within a Bid. This will allow the Scottish Ministers to consider value for money issues as set out at Clauses	The Operating Company shall enter the Contract rates and prices contained in Schedule 2 Part 2 together with the linkages to the Contract Price Fluctuation categories. These will be validated by the Director. In all cases descriptions shall be full and not linked to descriptions on other rates for example "as above". Once validated, only the Director and the

FUNCTIONS AND FUNCTIONALITY	ROLES OF PARTIES
7.2.11 and 7.2.12 of Schedule 1. All rates and prices contained in Schedule 2 Part 2 shall be tagged as determined rates and prices. Where a determined rate and price shall be entered to replace a fixed rate and price the Contract Price Fluctuation shall be automatically recalculated. When a determined rate and price for an item shall be inserted into the Schedule of Rates and Prices to supersede a fixed rate and price then only the determined rate shall be available thereafter for insertion into Operations instructions and Statements. However the fixed rate and price shall continue to be held as a Historical Record. When a determined rate for an item is inserted into the contract control and management function of the Integrated Roads Information System to supersede a fixed rate and price, then the function will automatically generate an Operations Instruction showing the cumulative quantity to date for that item as a positive number against the determined rate and price and the cumulative quantity to date for that series/item as a negative number against the fixed rate and price.	Performance Audit Group will have access to revise add or delete rates and prices.
13. Operations Instructions For Operations, the contract control and management function of the Integrated Roads Information System will generate Operations Instructions to each of which shall be allocated a unique identifier. No Operations Instruction shall be capable of being generated unless a Scheme Identifier Work Code and Order number or 9901 Activation shall be identified and logged on the Operations Instruction. The contract control and management function of the Integrated Roads Information System will prevent Operations Instruction from being issued without an itemised rate or price as held within the function as referred to in paragraph 12 of this Annex being inserted. The Operating Company shall place an estimated quantity against each itemised rate. The contract control and management function of the Integrated Roads Information System will then multiply the quantity with the rate to produce subtotals for each item which shall then be totalled to generate the estimated cost of the Operations Instruction. This shall be in a format such that on completion actual measured quantities can be entered and downloaded to the active Statement for that month. Each Operations Instruction within a Scheme shall contain	The Operating Company can generate and read Operations Instructions. The Director and the Performance Audit Group can read Operations Instructions.

FUNCTIONS AND FUNCTIONALITY	ROLES OF PARTIES
the following fields for Operating Company completion: (i) unique Operations Instruction identifier, (ii) Scheme Identifier, (iii) original Order number, (iv) Work Code, (v) road management and maintenance function of the Integrated Roads Information System Defect identifier, (vi) Damage to Crown Property identifier if appropriate, (vii) the items within the Schedule of Rates and Prices specified at paragraph 12 of this Annex to be used for the Operations. Changes to Series or items shall only be made prior to commencement of Operations and normally as a consequence of design requirements, (viii) the estimated quantities related to each item. Changes to estimated quantities shall only be made prior to commencement of Operations and normally as a consequence of Design requirements, (ix) for those Work Codes detailed in paragraph 12 of this Annex, insertion of a principal distance sum for carbon monitoring purposes for the main material utilised within the Scheme, (x) the estimated value of the Operations generated from the two foregoing, (xi) route number, (xii) location (link section and chainage plus a written description), (xiii) description of proposed Operations, and (xiv) proposed start and finish dates. Each Scheme within an Operations instruction shall also be capable of holding additional data as yet unspecified by the Director. The contract control and management function of the Integrated Road Information System will provide facilities for recording Site data associated with each Operations Instruction and shall contain, as a minimum, the following fields:	
(i) reasons for changes made on Site (written description).	

FUNCTIONS AND FUNCTIONALITY	ROLES OF PARTIES
Changes to estimated quantities made on Site: (a) actual measured quantities related to each item, (b) date Operations on Site commenced, (c) date Operations on Site completed, (d) name of authorised Site sign off, (e) name of countersigning manager, and (f) principal distance of main material used within the Scheme. The contract control and management function of the Integrated Roads Information System will be directly linked to the routine maintenance management function of the Integrated Roads Information System to allow Category 1 Defects to be imported to generate Operations Instructions. The contract control and management function of the Integrated Roads Information System will be set up in such a manner as to also allow Category 2 Defects identified from inspections to be grouped and imported, as well as allowing the export back of data to the routine maintenance management function of the Integrated Roads Information System. The contract control and management function of the Integrated Roads Information System will indicate completion of both Category 1 and 2 Defects to the routine maintenance management function of the Integrated Roads Information System. The information which shall be transferred from the routine maintenance and management function of the Integrated Roads Information System will contain the following fields: (i) routine maintenance and management function of the Integrated Roads Information System Defect identifier (which shall include the Defect category), (ii) route number, (iii) location – link section chainage plus a written description, (iv) locations – the Ordnance Survey grid reference or latitude and longitude of the start and the end of the Scheme, (v) description of proposed Operations, and (vi) proposed start and finish dates.	

FUNCTIONS AND FUNCTIONALITY	ROLES OF PARTIES
The information that will be transferred back to the routine maintenance and management function of the Integrated Roads Information System will include: (i) routine maintenance and management function of the Integrated Roads Information System identifier, (ii) Scheme Identifier, (iii) Operations Instruction reference, (iv) Operations Instruction start date, and (v) Operations Instruction closure date. The contract control and management function of the Integrated Roads Information System will prevent any further Operations Instructions from being generated if this shall exceed the value of the Order. The only exception shall be Operations Instructions related to emergencies. Operations Instructions which contain a Damage to Crown Property identifier which shall be tagged as estimated to cost less than £50,000 shall not send the costs to the Statement. These costs shall only be sent to data fields (a) (b) (c) (d) (e) (f) and (g) (see paragraph 18 of this Annex). An Operations Instruction shall not be able to contain more than one Damage to Crown Property identifier. The contract control and management function of the Integrated Roads Information System can generate Consolidated Operations Instructions containing more than one Operations Instruction. Each Consolidated Operations Instruction will be issued with a unique consecutive identifier number.	
14. Statement Each Statement will be given a unique consecutive number by the contract control and management function of the Integrated Roads Information System. The Operating Company shall provide the following two reports to be lodged in the contract control and management function of the Integrated Roads Information System which shall form part of the Statement each month: (i) a simplified Statement report as specified in Annex 4.1/D of this Part, (ii) a Scottish Executive accounting system Statement report allocating all costs within the Statement to Scottish Executive accounting system codes.	Operating Company can generate and read all Statements. Director and the Performance Audit Group can read all Statements. The Operating Company shall enter new indices for the Contract Price Fluctuation factors on a monthly basis.

FUNCTIONS AND FUNCTIONALITY	ROLES OF PARTIES
The Operating Company shall retain all supporting documentation related to Operations on which Statements have been prepared. Such documentation shall be referenced to the Scheme Identifier. As soon as actual measurement data is inserted into an Operations Instructions then this shall be transferred to a live running Statement for that month. The Contract Price Fluctuation item categories for each individual Statement shall be capable of being amended to allow for changing from provisional index figures to Final Index Figures. On occasion the Final Index Figures can also be updated. The cumulative calculation for the value of the Contract Price Fluctuation shall be based upon the summation of each individual Statement submitted. Each individual Statement shall be tagged as either provisional or final based on the Contract Price Fluctuation which has been applied.	
15. Payment Notified Record Each Payment Notified Record shall be given a unique consecutive number by the contract control and management function of the Integrated Roads Information System. Where Statements are submitted to the Director, the Director will use the contract control and management function of the Integrated Roads Information System to create a Payment Notified Record for that month as follows: (i) transfer elements from Part A to Part B of the Statement where such elements will be identified by the Director in Statements as disputed elements, (ii) manipulate the quantities (including setting negative quantities) in Statements to show the changes which the Director wishes to make, (iii) automatic recalculation of all values following (i) and (ii) above including Contract Price Fluctuation value and SEAS report,	The Director and the Performance Audit Group can generate and read Payment Notified Records. The Operating Company can read all Payment Notified Records.

FUNCTIONS AND FUNCTIONALITY	ROLES OF PARTIES
(iv) create an interim Payment Notified Record to facilitate a check on adjustments prior to the Payment Notified Record being finalised and submitted by the Director, (v) hold the Payment Notified Records showing the total for the year to date and the totals for completed years, and (vi) store all Payment Notified Records generated and tag each with date and time of issue and receipt.	
16. Payment Received Record The contract control and management function of the Integrated Roads Information System will record the date and value of the payment received from the Director for the month. This shall be known as the Payment Received Record. Each Payment Received Record shall be given a unique consecutive number by the contract control and management function of the Integrated Roads Information System.	The Operating Company can generate and read Payment Received Records. The Director and the Performance Audit Group can read all Payment Received Records.
17. Works Contracts Each Scheme for which there is a Works Contract Instruction issued shall contain the following fields for Operating Company completion: (i) Scheme Identifier, (ii) Work Code, (iii) appropriate series/item number related to Work Code as described in Annex 4.1/F of this Part, (iv) unique Works Contract Instruction number, (v) total Works Contract Instruction value for the Scheme within the Financial Year, (vi) cumulative total Works Contract Instruction value for the Scheme to date, (vii) tender value, (viii) date of Director award letter to Works Contractor, (ix) name of Works Contractor, (x) monthly payment certified, (xi) payment application, (xii) period covered, (xiii) total payments certified to date, (xiv) retention value,	The Operating Company can generate and read Works Contract Records. The Director and the Performance Audit Group can read all Works Contract Records.

FUNCTIONS AND FUNCTIONALITY	ROLES OF PARTIES
(xv) Contract control payment certification and monitoring forms as described in Schedule 6 Part 1, Annex 6.1/C, (xvi) actual Works on Site start date (or estimated prior to Works on Site commencing), (xvii) actual Works on Site end date (or estimated prior to Works on Site finishing), and (xviii) on completion the quantity related to the appropriate item number as above. The contract control and management function of the Integrated Roads Information System will tag each monthly payment certified with date and time of issue and receipt.	
18. Damage to Crown Property Cost Recovery The contract control and management function of the Integrated Roads Information System will contain the following fields for each incident which causes Damage to Crown Property for Operating Company completion: (i) unique Damage to Crown Property identifier automatically generated which can tag as either less than or equal to £50,000 or more than £50,000 estimated cost. Ability to re-tag if required, (ii) route number, (iii) date and time of incident, (iv) source of this information, (v) date that the Operating Company first became aware of the Damage to Crown Property, (vi) date damage logged, (vii) location of damage Site – link, section and chainage and Ordnance Survey grid reference, (viii) location of damage Site – written description, (ix) description of property, (x) type and extent of damage, (xi) cause of damage, (xii) name of culprit(s), (xiii) are proceedings being taken by police? (xiv) date emergency work was carried out (if any), (xv) who carried out emergency work (if any)? (xvi) road condition eg. good, rutted,	The Operating Company can generate and read Damage to Crown Property claims. The Director and the Performance Audit Group can read all Damage to Crown Property claims.

FUNCTIONS AND FUNCTIONALITY	ROLES OF PARTIES
(xvii) weather conditions, (xviii) was road wet, dry or icy? (xix) was Winter Service Plant called out? (xx) details of de-icing Operations, (xxi) was precautionary treatment carried out at the locus prior to the incident? (xxii) estimated final cost (measured in accordance with paragraph 3.1.2 of Schedule 4 Part 4), (xxiii) estimated date for final repair, (xxiv) names and addresses of witnesses (if any), (xxv) all other relevant information, (xxvi) brief account of incident causing damage, (xxvii) date of repair replacement and clearance, (xxviii) details of repair, (xxix) status with regard to recovery, (xxx) date the Director notified where cost of repair replacement and clearance exceeds £50,000, (xxxi) cost of repair replacement and clearance together with tag for estimated or final cost (see Damage to Crown Property 'Notification of the Final Valuation of Repair of an Incidence of Damage to Crown Property' shown in Schedule 4 Part 4, Annex 4.4/G), (xxxii) amount recovered from culprit, (xxxiii) final Statement number (if appropriate) (which shall be the Statement submitted by the Operating Company in accordance with Clause 10.3.1 of Schedule 1 to this Contract that contains the final claim for payment in respect of the incident to which the unique damage identifier applies), and (xxxiv) outstanding balance (difference between costs to be recovered and amount recovered). The costs to be recovered at (xxxi) shall be held within the following fields: (i) cost of repair replacement and clearance (section A of 'Notification of the Final Valuation of Repair of an Incidence of Damage to Crown Property shown in Schedule 4 Part 4, Annex 4.4/G), (ii) all other costs (section B of 'Notification of the Final Valuation of Repair of an Incidence of Damage to	

FUNCTIONS AND FUNCTIONALITY	ROLES OF PARTIES
Crown Property shown in Schedule 4 Part 4, Annex 4.4/G). The costs at (i) and (ii) above, shall be obtained from the following fields: (a) cost sub series, (b) description, (c) quantity, (d) Unit, (e) rate, (f) amount of costs, and (g) subtotal. When the cost field at (xxxi) above shall be tagged as final the system shall automatically generate a 'Notification of the Final Cost of Repair of an Incidence of Damage to Crown Property as described in Schedule 4 Part 4, Annex 4.4/G. These shall be issued to the Director in accordance with the requirements of paragraph 3.3.4 of Schedule 4 Part 4.	
19. Responsible Persons The contract control and management function of the Integrated Roads Information System will hold a list of responsible persons nominated by the Operating Company and the Director and the Performance Audit Group who shall have authority to undertake transactions and to whom messages shall be passed when specific transactions shall be undertaken. As a minimum this list will disclose: Name, Organisation, E- Mail Address, Grade, Telephone Contact details, Alternative point of contact – name, Alternative point of contact – telephone contact details.	The Operating Company can enter and revise its own staff designated as responsible persons. The Director can enter and revise his own staff or the Performance Audit Group's staff designated as responsible persons.
20. Time Work Schedule Supporting Documents Time work schedule supporting documents shall be logged onto the contract control and management function of the Integrated Roads Information System by the Operating Company under individual Operations Instructions and shall contain the following fields and sub-fields: (i) Operations Instruction identifier,	

FUNCTIONS AND FUNCTIONALITY	ROLES OF PARTIES
(ii) Scheme Identifier: (a) labour, (iii) each item number, (iv) quantity for each item, (v) rate for each item, (vi) cost for each item, (vii) total cost for all items listed: (a) plant listed, (viii) each item number, (ix) quantity for each item, (x) rate for each item, (xi) cost for each item, (xii) total cost for all each items listed: (a) plant from Schedule of Daywork plant rates, (xiii) quantity for plant type, (xiv) plant type cost from Schedule of Daywork plant rates, (xv) percentage adjustment rate for series/item, (xvi) cost for plant type, (xvii) total cost for all plant types: (a) supplementary charges, (xviii) statement/invoice cost of each item, (xix) percentage adjustment rates and prices for each item, (xx) cost for Statement/invoice, (xxi) total cost for all Statements/invoices: (a) materials, (xxii) quantity for each material, (xxiii) rate for each material, (xxiv) cost for each material, (xxv) total cost for each material listed.	
21. 9901 Activation Each 9901 Activation will be given a 9901 Activation number by the contract control and management function of the Integrated Roads Information System. This is a unique consecutive numbering system for the Unit. The	The Operating Company can generate and read 9901 Activations. The Director and the

FUNCTIONS AND FUNCTIONALITY	ROLES OF PARTIES
Order numbering convention shall be as set in the Integrated Roads Information System and shall include: (i) start year (in this case 2016), (ii) Unit – FB	Performance Audit Group can read 9901 Activations.

FUNCTIONS AND FUNCTIONALITY	ROLES OF PARTIES
(iii) consecutive Order number. Generate Scheme Identifiers and issue standalone 9901 Activations based on Bids submitted by the Operating Company. Each Scheme within a 9901 Activation shall contain the following fields: (i) Scheme Identifier, (ii) the Scheme manager reference from the Integrated Roads Information System where one exists, (iii) route number or all routes, (iv) Work Code, (v) Structure reference number (if the Scheme relates to a Structure), (vi) locations – start and end of each link section and chainage, (vii) locations – the Ordnance Survey grid reference or latitude and longitude of the start and the end of the Scheme, (viii) description of location, (ix) description of Operations and reasons for claim for payment, (x) details of any restrictions, (xi) required start and finish dates for each category of Operations or Works, (xii) 9901 Activation Total Order Value of Scheme Identifier (can be a negative number but not zero value), (xiii) 9901 Activation Total Order Value of Scheme within Financial Year, (xiv) cumulative Total Order Value of Scheme to date, (xv) Scheme Completion Date, and (xvi) Scheme Closure Date. An Order issued in respect of a 9901 Activation shall not be capable of being altered. Any changes shall require the issue of a further 9901 Activation by the Operating Company. The functionality of a 9901 Activation mirrors the functionality of an Order but shall not be deemed to be an Order.	

FUNCTIONS AND FUNCTIONALITY	ROLES OF PARTIES
22. Professional Services Register In accordance with the requirements of 2.2.4 (iii) of this Part and Schedule 9 Part 2 of this Contract, the Operating Company shall maintain a Professional Services register of staff within the contract control and management function of the Integrated Roads Information System containing the following information: (i) 6200 item no, (ii) full name, (iii) role within Operating Company function, (iv) location, (v) 6200 description, (vi) date approved by Transport Scotland, (vii) approval category-full or provisional, (viii) basis of approval – contract compliant or equivalence, and (ix) date of removal from register.	The Operating Company can enter and revise its employee details within the Register. The Operating Company shall flag new additions or application for new gradings to the Director for approval. The Director will be able to approve the application either in full or provisionally.
23. Carbon reporting The contract control and management function of the Integrated Roads Information System will produce a carbon report based upon the actual quantities of materials utilised in Operations as part of a Scheme. The report will contain the following figures: (i) total material carbon, (ii) total transport carbon, (iii) total carbon (sum of the two figures above). The Director will use the contract control and management function of the Integrated Roads Information System to: (i) store a mass conversion factor against each relevant Schedule of Rates and Prices item to allow conversion of appropriate item quantities in Operations Instructions to a mass measured in tonnes, (ii) store emissions factor histories for groups of like items in the Schedule of Rates and Prices to be used to derive a carbon figure for rate items in each Operations Instruction (aggregated up for each Scheme), (iii) store emissions factor histories used to calculate the transport carbon using the current fuel carbon factor and the principal distance figures for all	Only the Director will enter mass conversion factor as required onto the contract control and management function of the Integrated Roads Information System for each Schedule of Rates and Prices item. Only the Director will supply guidance on grouping of Schedule of Rates and Prices items for emissions factor rates. The Operating Company shall record principal distance for each relevant Scheme. Only the Director will supply the emissions factor rate history values and any amendments during the course of this Contract shall be under his direct control.

FUNCTIONS AND FUNCTIONALITY	ROLES OF PARTIES
appropriate Schemes, (iv) provide carbon report selection criteria and output specification. Procedures will be supplied to the Operating Company by the Director for recording principal distances within the Scheme. Appendix 1 to this Annex details the term descriptions, Operating Company and Director roles and contract control management function outputs required for carbon reporting.	The Operating Company shall generate reports as required for the Director.
Requirement for Carbon Report content The output requirements for carbon reporting are provided at Annex 4.1/H (xiii) of this Part.	

Annex 4.1/G Appendix 1

Calculations Required for Carbon Reporting through the Contract Control and Management Function of the Integrated Roads Information System (ref. Annex 4.1/G (23))

Item	Description	User Input	Contract Control and Management Functionality Calculation Required	Contract Control and Management Functionality Calculation Output
Principal Distance (PD)	The distance, in kilometres, to the Site from the primary material source eg. quarry supplier, as identified in the relevant maintenance Scheme detail (MSD) data sheet.	At Scheme Closure Date, record the principal distance (in km) in the appropriate field.	PD = user entered value	n/a
Mass Conversion Factor (MCF)	Factor provided by the Director to convert the contract control and management function of the Integrated Roads Information System Schedule of Rates and Prices item quantity unit (eg. m^2, m, m^3, litres, etc.) to a mass, in tonnes, for carbon emission calculations. This will be derived for a range of items where published carbon factors are available, and will be updated periodically in line with updates to published figures.	None. The contract control and management function of the Integrated Roads Information System will apply the MCF to each Schedule of Rates and Prices item recorded under the Scheme.	Schedule of Rate item (unit) * quantity * MCF	Item tonnage T1, T2, T3, etc.
Emissions Factor (EF) rate	Each Schedule of Rates and Prices material item type with an available published embodied carbon factor will be assigned an EF, provided by the Director. This will be multiplied by the item tonnage to provide an embodied carbon value for each item recorded under the Scheme.	None. Following application of the MCF, the contract control and management function of the Integrated Roads Information System will apply the EF to each Schedule of Rates and Prices item tonnage.	Item tonnage T1, T2, T3, etc. * EF for each item	Item embodied carbon tonnage C1, C2, C3, etc. (Measured in tCO2e)

Item	Description	User Input	Contract Control and Management Functionality Calculation Required	Contract Control and Management Functionality Calculation Output
Total Embodied Carbon in materials	The contract control and management function of the Integrated Roads Information System will calculate the total embodied carbon across all materials, with published EF, recorded under the Scheme.	None. The contract control and management function of the Integrated Roads Information System will sum the item embodied carbon values.	Sum of item embodied carbon tonnages C1 + C2 + C3, etc.	Total embodied carbon in Scheme materials C(SUM) (Measured in tCO2e)
Material Tonnes	To calculate transportation emissions, the contract control and management function of the Integrated Roads Information System requires a total material tonnage for each Scheme. This will be calculated by multiplying each relevant Schedule of Rates and Prices item by the MCF for each item, and then summing the total mass across all items within the Scheme.	None. The contract control and management function of the Integrated Roads Information System will sum the total mass across all items recorded under the Scheme.	Sum of item tonnages T1 + T2 + T3	Total material tonnage T(SUM)
Tonne-Kilometres	To calculate transportation emissions, the contract control and management function of the Integrated Roads Information System needs to multiply the total material tonnage by the principal distance	PD in kilometres at Scheme closure only.	T(SUM) * PD	Total tonne-kilometres t-km
Fuel Carbon Factor (FCF)	To calculate transportation emissions, the contract control and management function of the Integrated Roads Information System needs a carbon emissions factor for fuel consumption per tonne-kilometre. This factor will be supplied by Transport Scotland and will be based on published Defra figures for a 17 tonne	None. The contract control and management function of the Integrated Roads Information System will apply the FCF to calculate	FCF = figure provided by Transport Scotland and applied across all Schemes	n/a

Item	Description	User Input	Contract Control and Management Functionality Calculation Required	Contract Control and Management Functionality Calculation Output
	rigid heavy goods vehicle.	transportation emissions.		
Transport Carbon Emissions (TrC)	To calculate transportation emissions, the contract control and management function of the Integrated Roads Information System needs to multiply the FCF by the total number of tonne-kilometres.	None. The contract control and management function of the Integrated Roads Information System will multiply the tonne-kilometres by the FCF.	t-km * FCF	Total transport carbon emissions TrC (measured in tCO2e)
Total scheme carbon (SC)	To calculate the total carbon associated with a Scheme, the contract control and management function of the Integrated Roads Information System needs to add the total embodied carbon in materials to the total transportation carbon emissions.	None. The contract control and management function of the Integrated Roads Information System will add C(SUM) to TrC for each Scheme.	C(SUM) + TrC	Total Scheme carbon SC (Measured in tCO2e)

This is Annex 4.1/H to Schedule 4 Part 1 referred to in the foregoing Agreement between Scottish Ministers and Amey LG Limited.

SCOTTISH MINISTERS' REQUIREMENTS

SCHEDULE 4 PART 1

FINANCIAL AND CONTRACT MANAGEMENT

ANNEX 4.1/H – Standard Reports from the Contract Control and Management Function of the Integrated Roads Information System

SCOTTISH MINISTERS' REQUIREMENTS

SCHEDULE 4 PART 1

FINANCIAL AND CONTRACT MANAGEMENT

ANNEX 4.1/H – Standard Reports from the Contract Control and Management Function of the Integrated Roads Information System

Standard Reports

The contract control and management function of the Integrated Roads Information System will produce reports with fixed fields as referred to in this Annex of this Part. These reports will be menu driven to respond to requests for specific periods and in all cases show the periods covered. The contract control and management function of the Integrated Roads Information System will also produce ad-hoc reports using fields specified in (xiv) in Table 4.1.24.A. below and which shall be sorted in an order and for whatever period requested by the user. It shall also save the format of frequently requested ad-hoc reports if required.

Table 4.1.24.A– Fixed Fields

	Description	**'Fixed' Fields**	
(i)	Order versus spend by Scheme year	(a)	Scheme Identifier
		(b)	amounts Ordered (£)
		(c)	spend (Part A) (£) and
		(d)	difference between (b) (£), and (c) (£)
		(e)	part B (£)
(ii)	Analysis of costs by item series	(a)	all item series
		(b)	applied value for month (£)
		(c)	applied value for Financial Year to date (£)
		(d)	applied value for month as a percentage of total applied value for month (£) and
		(e)	applied value for Financial Year as a percentage of total applied value for year to date (£)
(iii)	Statement by Operations Instructions for current month	(a)	all fields as per Annex 4.1/G (12) of this Part but only showing current month's transactions and the corresponding totals for the Schemes involved.
(iv)	Scheme Completion or Closure	(a)	Scheme Identifier
		(b)	Scheme description

	Description	'Fixed' Fields	
		(c)	associated Further Detailed Directions reference number
		(d)	Further Detailed Direction status
		(e)	Scheme Completion Date (showing date entered into contract control and management function of the Integrated Roads Information System)
		(f)	Scheme Closure Date
		(g)	amounts omitted from payment (£)
		(h)	date for acceptance by Director and
		(i)	objected to by Director (Y/N)
(v)	Payment Notified Record checking facility (Manual Input by Performance Audit Group required)	(a)	Operations Instruction
		(b)	Order number
		(c)	Scheme Identifier
		(d)	Series or item number
		(e)	unit of measurement
		(f)	applied quantity for month
		(g)	certified quantity for month after Payment Notified Record
		(h)	applied value (£) for month
		(i)	certified value (£) for month after Payment Notification Record and
		(j)	amount to omit or release (including net total) (£) (h)–(i)
(vi)	Works Contractors Register Tender or outturn costs (Manual input by Operating Company required)	(a)	Scheme Identifier
		(b)	Scheme description
		(c)	route
		(d)	Work Code
		(e)	Series or item number
		(f)	name and address of Works Contractor
		(g)	tender value (£) and award date
		(h)	dates of payment application
		(i)	period covered by statement/invoice
		(j)	actual and proposed site Works start date

	Description	'Fixed' Fields
		(k) actual and proposed Works period length (days)
		(l) extensions of time granted by the Engineer
		(m) actual and proposed site Works end date
		(n) amount (£) and date of interim payments certified
		(o) total payments (£) certified to date
		(p) payment (£) outstanding including retention value
		(q) retention value (£)
		(r) bonus or charge (£) for occupancy
		(s) total estimated and actual cost including bonus or charge (£)
		(t) difference between total estimated and actual cost including bonus/charge (r) and tendered value (g) (£)
		(u) explanation for any differences + or- 10%
		(v) on completion the quantity related to (e) above
		The register will also contain the following information
		(i) every 26 weeks and in any event within 14 days of the issue of the certificate of completion and the maintenance certificate, on a scale of 1 to 10 in the opinion of the Engineer, the overall performance of the Works Contractor
		(ii) a written appraisal in three parts by the Engineer on the performance of the Works Contractor including:
		(a) quality of the Works
		(b) quality of the Works Contractor's resources and
		(c) approach and attitude of the Works Contractor including approach to measurement and claims
		(iii) separate details of all Scheme files including as a minimum
		(a) health and safety files
		(b) certification

	Description	'Fixed' Fields
		(c) Design
		(d) supervision
		(e) measurement and payment records and
		(f) as-built drawings/records
(vii)	Order Register showing related Further Detailed Enquiry and Further Detailed Direction and Confirmation of Oral Order	(a) Order number
		(b) date Order created
		(c) Scheme Identifier
		(d) description of Operations
		(e) reference number of any associated Further Detailed Direction or Further Detailed Enquiry or Confirmation of Oral Order and
		(f) description of any associated Further Detailed Direction or Further Detailed Enquiry or Confirmation of Oral Order
(viii)	Further Detailed Enquiries and Further Detailed Directions	Further Detailed Enquiry
		(a) reference number
		enquiry details
		date issued
		requested date for response
		status (resolved/unresolved)
		Operating Company contact name
		reference number of Further Detailed Direction response
		(b) Further Detailed Direction
		reference number
		Further Detailed Enquiry / Confirmation of Oral Order reference number
		details of direction
		target date for completion
		actual completion date
		Director contact name
		Status (open/completed)
(ix)	Bids highlighting those not subject to an Order	(a) Bid number
		(b) description

	Description	'Fixed' Fields
		(c) date of Bid
		(d) Bid value (£)
		(e) associated Order number
		(f) date of Order
		(g) Order value (£)
		(h) Bid numbers not ordered
(x)	Schemes subject to an Order but not commenced	(a) Scheme Identifier
		(b) Scheme description
		(c) route
		(d) Order number
		(e) Orders not commenced
(xi)	Rates and Prices for new items (Manual input by Operating Company and Director required)	(a) description of new rate
		(b) description of items within new rate and price
		(c) date of submission of application for rate and price for new item
		(d) status (submitted/determined/agreed)
		(e) details of progress
		(f) item number allocated by Performance Audit Group
		(g) date determined or agreed by the Director
		(h) date determined or agreed entered into the contract control and management function of the Integrated Roads Information System
		(i) amount of determined or agreed rates and prices (£)
		(j) action (Director or Operating Company or Performance Audit Group)
(xii)	Relevant HTMA Contract Price Fluctuation indices by month showing provisional and final	(a) Statement number
		(b) month applicable to indices used
		(c) provisional index for:

WC10/1	Routine, Cyclic and Time Charge Works
WC10/2	Renewals and Construction Works
WC10/3	Professional Services
WC10/4	Machine Surfacing
WC10/5	Hand Surfacing/Patching
WC10/6	Surface Dressing

	Description	'Fixed' Fields
		WC10/7 Road Markings WC10/8 Street Lighting WC10/9 Vehicle Maintenance (d) final index for: WC10/1 Routine, Cyclic and Time Charge Works WC10/2 Renewals and Construction Works WC10/3 Professional Services WC10/4 Machine Surfacing WC10/5 Hand Surfacing/Patching WC10/6 Surface Dressing WC10/7 Road Markings WC10/8 Street Lighting WC10/9 Vehicle Maintenance
(xiii)	Carbon emission reporting for materials usage and materials transport	Appendix 1 to Annex 4.1/G of this Part details the contract control management function outputs required for carbon reporting.
(xiv)	Fields for ad-hoc reports	(a) period covered
		(b) Operations Instruction number
		(c) Order number
		(d) budget year
		(e) route
		(f) Scheme Identifier
		(g) Scheme description
		(h) Work Code
		(i) Series number eg. 0400 (where full item number shall be **0400**03231)
		(j) Series or sub-series eg. 040003 (where full item number shall be **040003**231)
		(k) Series or sub-series or item number (where full item number shall be **040003231**)
		(l) item description
		(m) quantity band category
		(n) chainage and linkage
		(o) unit of measurement
		(p) current month quantity
		(q) rate and price(£)
		(r) Contract Price Fluctuation for current month by category (£)

This is Annex 4.1/I to Schedule 4 Part 1 referred to in the foregoing Agreement between Scottish Ministers and Amey LG Limited.

SCOTTISH MINISTERS' REQUIREMENTS

SCHEDULE 4 PART 1

FINANCIAL AND CONTRACT MANAGEMENT

ANNEX 4.1/I – Equality Act Requirements

SCOTTISH MINISTERS' REQUIREMENTS

SCHEDULE 4 PART 1

FINANCIAL AND CONTRACT MANAGEMENT

ANNEX 4.1/I – Equality Act Requirements

DDA1 Scheme Pro forma

Network Unit:														
Operating Company:										Refer to Section 3.1 of the Guidance Note for guidance in completing this proforma				
Scheme ID number:														
Scheme name:														
Works location and approximate length:							[Note road name, start/end location reference (link, section, chainage), approximate length]							
Scheme description:														
Scheme cost:							£0							
LIST OF PROPOSED ACCESSIBILITY WORKS, INCLUDING WHERE APPLICABLE REFERENCE TO EXISTING BARRIERS TO ACCESSIBILITY ADJACENT TO OR WITHIN THE EXTENT OF THE SCHEME:														
ROAD NAME	ITEM UID	ITEM TYPE	E	N	SECTION NO.	SECTION NAME	BARRIER UID	BARRIER TO ACCESSIBILITY	REASON BARRIER CAN NOT BE ADDRESSED IN 1 or 3 YEAR PROGRAMMES	IS BARRIER LISTED IN THE DDA DATABASE? (Y/N)	IS BARRIER WITHIN EXTENT OF THE SCHEME? (Y/N)	IS BARRIER BEING ADDRESSED IN SCHEME? (Y/N)	* COST TO ADDRESS BARRIER	
													£0	
													£0	
													£0	
													£0	
													£0	
													£0	
													£0	
													£0	
													£0	
													£0	
* Note cost as zero if cost neutral (eg removal of the barrier does not increase the cost of works, or the item had to be replaced for other reason)														
Additional cost to scheme for those barriers proposed to be addressed:													£0	
SCHEME COST, INCLUDING ADDITIONAL COST FOR THOSE BARRIERS PROPOSED TO BE ADDRESSED:													**£0**	
We confirm that in considering works on the part of the trunk road network as referenced above we, the Operating Company, have reviewed all available data sources and have taken cognisance of known DDA barriers to accessibility as listed on this record.														
Design Manager				Signature:			Date:							
Transport Scotland Representative				Signature:			Date:							

DDA2 Scheme Pro forma

Network Unit:	
Operating Company:	Refer to Section 3.2 of the Guidance Note for guidance in completing this proforma
Scheme ID number:	
Scheme name:	
Works location and approximate length:	[Note road name, start/end location reference (link, section, chainage), approximate length]
Scheme description:	
Scheme cost:	£0

LIST OF PROPOSED ACCESSIBILITY WORKS, INCLUDING WHERE APPLICABLE REFERENCE TO EXISTING BARRIERS TO ACCESSIBILITY WITHIN THE EXTENT OF THE SCHEME:

ROAD NAME	ITEM UID	ITEM TYPE	E	N	SECTION NO.	SECTION NAME	BARRIER UID	BARRIER TO ACCESSIBILITY	REASON BARRIER IS NOT BEING ADDRESSED IN SCHEME	IS BARRIER LISTED IN THE DDA DATABASE? (Y/N)	IS BARRIER BEING ADDRESSED IN SCHEME? (Y/N)	COST TO ADDRESS BARRIER
												£0
												£0
												£0
												£0
												£0
												£0
												£0
												£0
												£0
												£0

We confirm that in considering works on the part of the trunk road network as referenced above we, the Operating Company, have reviewed all available data sources and have taken cognisance of known DDA barriers to accessibility as listed on this record.

Design Manager	Signature:		Date:
Transport Scotland Representative	Signature:		Date:

SCOTTISH MINISTERS' REQUIREMENTS

SCHEDULE 4 PART 2

INTEGRATED ROADS INFORMATION SYSTEM

CONTENTS **Page No.**

1.	**INTEGRATED ROADS INFORMATION SYSTEM**	**1**
1.1	General	1
2.	**TRUNK ROAD NETWORK REFERENCING AND UPDATING**	**4**
2.1	Network Reference Requirements	4
2.2	Schemes Requiring Network Updates	5
2.3	Information Required for Network Reference System Changes	6
2.4	Inventory Requirements	7
2.5	Inspection and Maintenance Requirements	8
3.	**PAVEMENT MANAGEMENT FUNCTIONALITY OF THE INTEGRATED ROADS INFORMATION SYSTEM FEATURES**	**8**
4.	**ROUTINE MAINTENANCE AND MANAGEMENT FUNCTION OF THE INTEGRATED ROADS**	**10**
4.1	Information System Features	10
ANNEX 4.2/A – Maintenance Scheme Data Sheet		**11**
ANNEX 4.2/B – Notification of SCRIM Category for Network Update Document		**16**
ANNEX 4.2/C – Network Update Process, Network Change Form and Network Error Form		**20**
ANNEX 4.2/D – Explanation for Change Form		**26**
ANNEX 4.2/E – Design for Node Marker Reference Replacement		**30**

SCOTTISH MINISTERS' REQUIREMENTS

SCHEDULE 4 PART 2

INTEGRATED ROADS INFORMATION SYSTEM

1. INTEGRATED ROADS INFORMATION SYSTEM

1.1 General

1.1.1 The Integrated Roads Information System will be provided by the Director to the Operating Company via a hosted solution. The features and functionality of the Integrated Roads Information System are made available to the Operating Company through the internet.

1.1.2 The Director will supply the Operating Company with 30 named licences to access the system.

1.1.3 The functions within the Integrated Roads Information System are as detailed below:

(i) Contract control management function of the Integrated Roads Information System including as a minimum data for:

(a) financial and contract management activities,

(b) work transactions,

(c) financial statements, and

(d) transaction documents.

(ii) Pavement management function of the Integrated Roads Information System including as a minimum data for:

(a) condition, and

(b) network.

(iii) Scheme manager function of the Integrated Roads Information System including as a minimum data for:

(a) all Schemes included in draft and approved one and three year programmes and all other identifiable Schemes for future consideration,

(b) all Statement of Intents, results of further investigations and other information supporting the Scheme justification,

(c) current Scheme costs, programme and status information, and

(d) Scheme Design and construction information.

(iv) Routine maintenance and management function of the Integrated Roads Information System including as a minimum data for:

(a) network,

(b) inventory,

(c) Defect,

(d) inspection, and

(e) maintenance.

The routine maintenance and management function of the Integrated Roads Information System includes all data associated with the Trunk Road network.

(v) Structures management function of the Integrated Roads Information System including as a minimum data for:

(a) inventory,

(b) Defect,

(c) inspection, and

(d) maintenance.

Additional data management requirements for the Principal Crossings are contained in Schedule 7 Part 7.

(vi) Development management function of the Integrated Roads Information System including as a minimum data for:

(a) pre application,

(b) application, and

(c) response.

(vii) Accident recording and analysis function of the Integrated Roads Information System including as a minimum data for:

(a) severity, casualty and accident rates,

(b) identification of cluster sites,

(c) Performance Indicators to report against accident and casualty reduction targets, and

(viii) Lighting management function of the Integrated Roads Information System including as a minimum data for:

(a) inventory,

(b) Defect,

(c) inspection, and

(d) maintenance.

(ix) Management of incidents function of the Integrated Roads Information System including as a minimum data for:

(a) Disruption Risk planning,

(b) Incident Response planning and Incident Response Operations,

(c) Trunk Road Incident Support Service planning, and

(d) Incident Support Units planning.

(x) Intelligent transport system function of the Integrated Roads Information System including as a minimum data for:

(a) inventory,

(b) Defect,

(c) inspection, and

(d) maintenance.

(xi) Performance and reporting measurement system function of the Integrated Roads Information System including as a minimum data for:

(a) reports,

(b) performance frameworks,

(xii) Third party claims function of the Integrated Roads Information System including as a minimum data for:

(a) processing and managing third party claims, and

(b) claim history.

1.1.4 The Operating Company shall not upload any data from its own systems into the Integrated Roads Information System except when transferring data from Data Capture Devices.

The Integrated Roads Information System allows for downloading of data to Operating Company systems in a variety of manners including standard Microsoft Office output files, comma separated variable files and XML Schema. The Operating Company may submit requests to the Director for the use of alternative output formats. Consent for such usage shall be at the sole discretion of the Director.

1.1.5 The Operating Company shall provide the following to enable its licensed users to access the Integrated Roads Information System:

(i) computer terminals running an acceptable version of Microsoft Internet Explorer or acceptable alternative browser software,

(ii) broadband (with a minimum connection speed of one megabit per second for up to five users), corporate network or similar internet access, and

(iii) security and firewall setup enabling the following protocols:

(a) HyperText Transfer Protocol ("http"),

(b) HyperText Transmission Protocol-Secure ("https"),

(c) Citrix Internet Connection Sharing ("ICS"), and

(d) Remote Desktop Protocol ("RDP") or equivalent.

1.1.6 The Director will supply software for Data Capture Devices for use during inspections as required by Schedule 7 Part 1.

1.1.7 The Operating Company shall supply all Data Capture Device hardware that shall meet the following minimum specifications:

(i) laptop, tablet personal computer or similar device running a suitable Windows operating system (not Linux or similar), or any other software as notified by the Director,

(ii) compliance with the specification in paragraph 1.1.6 of this Part excepting item (ii),

(iii) minimum 100 gigabyte data storage memory, and

(iv) global positioning system capabilities.

1.1.8 The Operating Company shall accommodate all future developments of the Integrated Roads Information System at any time up to and including the Service End Date.

1.1.9 The Operating Company shall appoint an Integrated Roads Information System Coordinator in accordance with the requirements of Schedule 5 Part 4, who is responsible for the implementation and management of all modules of the Integrated Roads Information System by the Operating Company.

1.1.10 The Integrated Roads Information System Coordinator shall provide to the Director the names and email addresses of staff authorised by the Operating Company to use the Integrated Roads Information System. The Operating Company shall notify the Director within five Working Days of any changes of authorised users. Within one Working Day of any authorised user ceasing to be employed by the Operating Company, the Operating Company shall notify the Director accordingly.

All usernames and passwords supplied by the Director to the Operating Company, or passwords generated by the Operating Company's staff, shall be treated as confidential information and the Operating Company shall ensure staff do not divulge this information to any other person.

1.1.11 An Integrated Roads Information System user group meeting shall be held from time to time to inform the Operating Company of future changes to the Integrated Roads Information System and discuss potential developments to the Integrated Roads Information System. Any developments to the Integrated Roads Information System shall be at the sole discretion of the Director.

The Integrated Roads Information System Coordinator shall attend the Integrated Roads Information System user group at the dates and times notified in writing by the Director.

1.1.12 During Mobilisation Period 1 and from time to time up to and including the Service End Date, the Director will provide training to staff nominated by the Operating Company on the use of the Integrated Roads Information System. These nominated staff shall then be responsible for training other members of the Operating Company's staff as necessary in its use. The Operating Company shall ensure that all nominated staff attend such training at the dates and times notified in writing by the Director.

1.1.13 The Operating Company is responsible for providing any additional training and ensuring that the Integrated Roads Information System is used in accordance with this Contract.

2. TRUNK ROAD NETWORK REFERENCING AND UPDATING

2.1 Network Reference Requirements

2.1.1 The Trunk Road network is defined by way of a linear network referencing system using a series of links and sections dividing each route into identifiable lengths for

management purposes. Each link and section has attributes defining its location, road characteristics and shape and is marked by sets of studs installed on the road. All Trunk Road data including Defects, treatments, inventory, condition data, accidents and any other relevant data are fitted to this network referencing system. This data is referenced by their link, section and chainage from the network node point and by Ordnance Survey grid reference co-ordinates.

2.1.2 The Director is responsible for:

(i) defining the Trunk Road network and its attributes in the Integrated Roads Information System,

(ii) assigning link and section numbers and node points to the Trunk Road network, and

(iii) updating the Integrated Roads Information System,

when changes occur to the Trunk Road network, attributes and data.

The Trunk Road network referencing system is held by the Director and supplied to the Operating Company on the Integrated Roads Information System. The Operating Company shall ensure that the network referencing system is used in all of its systems which reference data to the Trunk Road network.

2.2 Schemes Requiring Network Updates

2.2.1 Updates to the Trunk Road network referencing system are necessary when the geometric alignment of a road changes.

Changes include major realignments such as new motorways or bypasses of communities and also less extensive changes such as:

(i) on-line dualling,

(ii) new junction layouts,

(iii) roundabouts,

(iv) bend straightening, and

(v) any other change where the new alignment deviates by 300 millimetres from that currently recorded in the Trunk Road network referencing system.

Other changes to the Trunk Road may affect the characteristic of a road although the geometric alignment may remain unaltered. Changes to the characteristics of a road include:

(i) addition of a climbing Lane,

(ii) carriageway or Lane widening,

(iii) changes in Lane allocation or junction layouts,

(iv) bridge or culvert extensions, and

(v) other features affecting the use and maintenance of the Trunk Road.

2.2.2 The Operating Company shall implement processes to ensure that any change to the geometric alignment or characteristic of a Trunk Road within the Unit is identified.

Sources of potential change may include:

(i) Schemes promoted by the Operating Company such as minor improvement Schemes,

(ii) improvement schemes promoted by the Scottish Government such as bypasses and major improvement projects,

(iii) Schemes promoted by third parties as referred to in Schedule 8 Part 2, and

(iv) errors and discrepancies in the current network referencing.

2.2.3 No later than six months after Commencement of Service Date 1, the Operating Company shall ensure that the Integrated Roads Information System network referencing accurately reflects the physical road network characteristics. Any such characteristics, as detailed in paragraph 2.2.1 of this Part shall be identified using the update process and forms provided in Annex 4.2/C of this Part.

2.3 Information Required for Network Reference System Changes

2.3.1 Where, as a result of Operations, Works or any other work by third parties, changes of geometric alignment or characteristics necessitate updates to the Trunk Road network referencing system, the Operating Company shall, referring to the update process and using the forms provided in Annex 4.2/C of this Part, instigate the update process by submitting a network change sheet to the Director. Where an error is identified, the Operating Company shall submit a network error sheet to the Director.

Complete data shall be provided by the Operating Company at least four weeks before commencement of construction work to allow the changes to be implemented.

2.3.2 The following information shall be provided by the Operating Company to the Director for each Scheme identified, during the update process, to ensure that the changes required can be assessed, node markers installed and the Trunk Road network referencing system updated:

(i) Scheme layout plans at 1:2500 scale which shall include the Scheme chainages for each carriageway in the Scheme at the tie-in points to the existing road,

(ii) proposed new or revised network node locations (if applicable),

(iii) Scheme construction, commencement and completion dates. The date when traffic first starts using the road in a temporary traffic management contra-flow or other temporary traffic management situation before Scheme construction has been completed shall also be provided,

(iv) carriageway specification and the number of Lanes for each new section,

(v) once the revised (Scheme) network has been notified to the Operating Company by the Director, the Operating Company shall within 25 Working Days provide to the Director:

(a) a completed ‘Maintenance Scheme Data Sheet’, to the format shown in Annex 4.2/A of this Part, and

(b) Sideways Co-efficient Routine Investigation Machine ("SCRIM") Site categories to the format shown in Annex 4.2/B of this Part,

for the Scheme, based relative to the new network referencing, and

(vi) once the network node locations have been advised in writing by the Director and node markers installed, details for each Scheme as follows:

(a) measured lengths for each new network section including those comprising existing or new road,

(b) measured chainage of the start and end of the new Scheme related to the existing network referencing,

(c) Ordnance Survey grid references for each installed network node point which shall be provided as 12 figure references and shall be accurate to plus or minus one metre, and

(d) node marker reference replacement documents to the format shown in Annex 4.2/E of this Part.

The Operating Company shall:

(i) notify the Director of any Scheme, change in characteristic or potentially required changes to the Trunk Road network within the Unit and provide data as referred to in paragraphs 2.3.1 and 2.3.2 of this Part,

(ii) ensure that all Operating Company systems use the most up-to-date network referencing system,

(iii) maintain all road studs as referred to in Schedule 7 Part 1, and

(iv) notify the Director of:

(a) any error, inaccuracy or discrepancy in the Integrated Roads Information System,

(b) the reason for such error, and

(c) the proposed correction for consideration by the Director.

2.4 Inventory Requirements

2.4.1 The Integrated Roads Information System made available for the Operating Company will include a facility to access an historic inventory for that part of the Unit formerly the responsibility of FETA. Within six months of Commencement of Service Date 1, the Operating Company shall review and update this historic inventory.

2.4.2 The Operating Company shall add new inventory items and amend existing inventory items in the Integrated Roads Information System to accurately reflect the inventory on Network 2. The additions and amendments shall be completed within six months of receipt of as-built information from the Director.

2.4.3 The Operating Company shall:

(i) maintain the accuracy and integrity of all inventory data as defined in the Transport Scotland *Inventory Collection Manual*,

(ii) add new inventory items and end-date old items as the inventory changes, and

(iii) add missing inventory records for current inventory items.

2.5 Inspection and Maintenance Requirements

2.5.1 The Director is responsible for defining the types of inspections and maintenance to be recorded by the Operating Company in the Integrated Roads Information System.

2.5.2 The Operating Company shall:

(i) design its inspection and maintenance routes,

(ii) create and maintain its routes in the routine maintenance and management function of the Integrated Roads Information System,

(iii) enter details of all inspections, Defect rectification and maintenance activities undertaken, and

(iv) record all required data and attributes in the routine maintenance and management function of the Integrated Roads Information System.

2.5.3 The Operating Company shall ensure that the routine maintenance and management function of the Integrated Roads Information System data supports the evidence required for fatal accident inquiries and the consideration of damages claims by third parties. The Operating Company shall maintain and ensure the accuracy and integrity of the routine maintenance and management function of the Integrated Roads Information System data at all times including all inventory, Category 1 and Category 2 Defects and all inspections and maintenance carried out on the Trunk Roads within the Unit.

2.5.4 The Operating Company shall include procedures in the Management System for the validation of all data for correctness and completeness before entering the data into the routine maintenance and management function of the Integrated Roads Information System. Any error or omission in the routine maintenance and management function of the Integrated Roads Information System data found by the Operating Company shall be corrected within four Working Days of its discovery.

3. PAVEMENT MANAGEMENT FUNCTIONALITY OF THE INTEGRATED ROADS INFORMATION SYSTEM FEATURES

3.1.1 The Director will populate the pavement management function of the Integrated Roads Information System module with the following:

(i) road condition data including as a minimum:

(a) SCANNER survey data,

(b) Sideways Co-efficient Routine Investigation Machine ("SCRIM") survey data, and

(c) deflectograph survey data,

(ii) derived traffic flow data from the Traffic Scotland Systems Contractor's database,

(iii) accident data, and

(iv) road construction data.

3.1.2 Survey contractors employed by the Director shall undertake road condition surveys.

The Director will notify the Operating Company in writing of the programme of routes and types of survey to be undertaken on the Unit each year during Service Delivery Period 1 and Service Delivery Period 2. Notification will be provided at least one month before the start of the annual survey cycle.

3.1.3 The Director's survey contractors will liaise directly with the Operating Company informing it of dates and types of survey to be, or being, undertaken on the Trunk Road network. The Operating Company shall liaise with such survey contractors when necessary for traffic management and other safety purposes.

3.1.4 The Operating Company shall analyse and interpret the pavement management function of the Integrated Roads Information System data to identify structural pavement maintenance Schemes.

3.1.5 The Operating Company shall utilise the Scheme manager function of the Integrated Roads Information System module of the Integrated Roads Information System with details of all structural pavement maintenance Schemes in its draft maintenance programmes as referred to in Schedule 4 Part 1.

The progress of each Scheme, as referred to in Schedule 4 Part 1, shall be updated by the Operating Company in the Scheme manager function of the Integrated Roads Information System within five Working Days throughout Service Delivery Period 1 and Service Delivery Period 2.

3.1.6 A Statement of Intent and Value for Money Assessment as referred to in Schedule 4 Part 1 shall be attached to each Scheme record by the Operating Company.

The category of the Scheme will be entered by the Director.

3.1.7 As part of the requirements for completion of a Scheme which includes repair, replacement or change of an area of carriageway greater than 30 metres in length and of width not less than half of the Lane width, the Operating Company shall produce a maintenance Scheme data sheet for that area.

If more than one specification for repair, replacement or change is adopted within the area, the Operating Company shall produce a structural pavement maintenance Scheme data sheet for each specification that is adopted. Submission shall be made on the basis of one submission per Scheme with separate sheets identified by chainage for each specification. The following filenaming convention shall be used "MSD_YYYY_XXXX_ZZZZ", where:

(i) YYYY = year e.g. 1314 for Financial Year 2013/3014,

(ii) XXXX = route e.g. A90,

(iii) ZZZZ = Scheme name/location e.g. Echline, and

(iv) example filename = "MSD_1314_A90_Echline".

3.1.8 The Operating Company shall prepare maintenance Scheme data sheets in the form referred to in Annex 4.2/A of this Part. Such maintenance Scheme data sheets shall contain sufficient data to identify uniquely the location and extent of the area of repair, replacement or change with respect to the linear network referencing system. Following Scheme approval, there may be a requirement to adjust a Scheme on Site. On such occasions an explanation for change form, provided in Annex 4.2/D of this Part, shall be submitted with the maintenance Scheme data sheet.

The Operating Company shall submit maintenance Scheme data sheets where pavement investigations indicate there is a substantial difference between the existing construction layers and those recorded in the Integrated Roads Information System and where the difference is likely to influence the interpretation of deflectograph data.

The Operating Company shall submit maintenance Scheme data sheets to the Director within 25 Working Days of substantial completion of the related repair, replacement, change or Site investigation.

4. ROUTINE MAINTENANCE AND MANAGEMENT FUNCTION OF THE INTEGRATED ROADS

4.1 Information System Features

4.1.1 The routine maintenance and management function of the Integrated Roads Information System data can be accessed, interrogated and retrieved using one or more of the following methods:

(i) map based presentation of data,

(ii) fixed reports, and

(iii) user defined reports.

4.1.2 The fixed reports shall include as a minimum:

(i) Category 1 Defects and Category 2 Defects,

(ii) Category 1 Defect repair performance,

(iii) Safety Inspection performance,

(iv) Safety Patrol performance,

(v) Detailed Inspection performance, and

(vi) maintenance performance.

4.1.3 The user defined reports enable users to create queries concerning the Integrated Roads Information System data and to save the data in a text format.

The Operating Company shall use the routine maintenance and management function of the Integrated Roads Information System to record details and evidence of its activities until the Service End Date, including as a minimum:

(i) completed inspection checklists and Certificates,

(ii) evidence of activities being carried out with before and after photographs,

(iii) photographic evidence of all Category 1 Defects and appropriate Category 2 Defects,

(iv) photographic evidence of Defect repairs for all Category 1 Defects and appropriate Category 2 Defects,

(v) inventory design information, and

(vi) photographs of inventory items for all items required by the Transport Scotland *Inventory Collection Manual* and where appropriate for other items.

This is Annex 4.2/A to Schedule 4 Part 2 referred to in the foregoing Agreement between Scottish Ministers and Amey LG Limited.

SCOTTISH MINISTERS' REQUIREMENTS

SCHEDULE 4 PART 2

INTEGRATED ROADS INFORMATION SYSTEM

ANNEX 4.2/A – Maintenance Scheme Data Sheet

SCOTTISH MINISTERS' REQUIREMENTS

SCHEDULE 4 PART 2

INTEGRATED ROADS INFORMATION SYSTEM

ANNEX 4.2/A – Maintenance Scheme Data Sheet

MAINTENANCE SCHEME DATA FORM

General Information

Route	- Pick from List -	Change Sheet Required	- Pick from List -
Work code	- Pick from List -	Scheme number	
Scheme Name			

Key Dates

Date Works completed		Issue Days	0
Date MSD Issued to TS			

Additional Comments

Please add any additional comment below including details of any treatments not available in drop down lists or where 'Other' has been chosen in the construction data. Please add new lines if required.

Checking and Approvals

For Operating Company

MSD Completed by	
MSD Checked by	

For Transport Scotland

MSD Checked by	
IRIS Updated by	

Summary	Comments	Start Link/Section Chainage		End Link/Section Chainage		Intermediate Sections			ISP (enter all valid ISP)	Material Removed	Layer	Treatment Type	Material Type	Material Spec.	% Recycled	MIXING TEMP	MATERIAL THICKNESS (mm)	BINDER TYPE	BINDER SPEC	GRADING	AGG. TYPE	AGG. SIZE	Design PSV	Laid PSV	MATERIAL SOURCE		
		Link	Ch	Link	Ch	Link	Link	Link																	Plant	Coarse Aggregate	Fine Aggregate
											-Pick from List-				0%												
											-Pick from List-				0%												
											-Pick from List-				0%												
											-Pick from List-				0%												
											-Pick from List-				0%												
											-Pick from List-				0%												
											-Pick from List-				0%												
											-Pick from List-				0%												
											-Pick from List-				0%												
											-Pick from List-				0%												
											-Pick from List-				0%												
											-Pick from List-				0%												
											-Pick from List-				0%												
											-Pick from List-				0%												
											-Pick from List-				0%												
											-Pick from List-				0%												
											-Pick from List-				0%												
											-Pick from List-				0%												
											-Pick from List-				0%												
											-Pick from List-				0%												

This is Annex 4.2/B to Schedule 4 Part 2 referred to in the foregoing Agreement between Scottish Ministers and Amey LG Limited.

SCOTTISH MINISTERS' REQUIREMENTS

SCHEDULE 4 PART 2

INTEGRATED ROADS INFORMATION SYSTEM

ANNEX 4.2/B – Notification of SCRIM Category for Network Update Document

SCOTTISH MINISTERS' REQUIREMENTS

SCHEDULE 4 PART 2

INTEGRATED ROADS INFORMATION SYSTEM

ANNEX 4.2/B – Notification of SCRIM Category for Network Update Document

NOTIFICATION OF SCRIM SITE CATEGORY AND IL UPDATE
NEW CONSTRUCTION / NETWORK UPDATE

Unit	
Route	
Scheme Name (if new scheme)	

Date supplied to TS	
Date works complete (if new scheme)	

XSP	Link/Section	Start Chainage	End Chainage	SCRIM Category	IL

Completed by	Checked by

This is Annex 4.2/C to Schedule 4 Part 2 referred to in the foregoing Agreement between Scottish Ministers and Amey LG Limited.

SCOTTISH MINISTERS' REQUIREMENTS

SCHEDULE 4 PART 2

INTEGRATED ROADS INFORMATION SYSTEM

ANNEX 4.2/C – Network Update Process, Network Change Form and Network Error Form

SCOTTISH MINISTERS' REQUIREMENTS

SCHEDULE 4 PART 2

INTEGRATED ROADS INFORMATION SYSTEM

ANNEX 4.2/C – Network Update Process, Network Change Form and Network Error Form

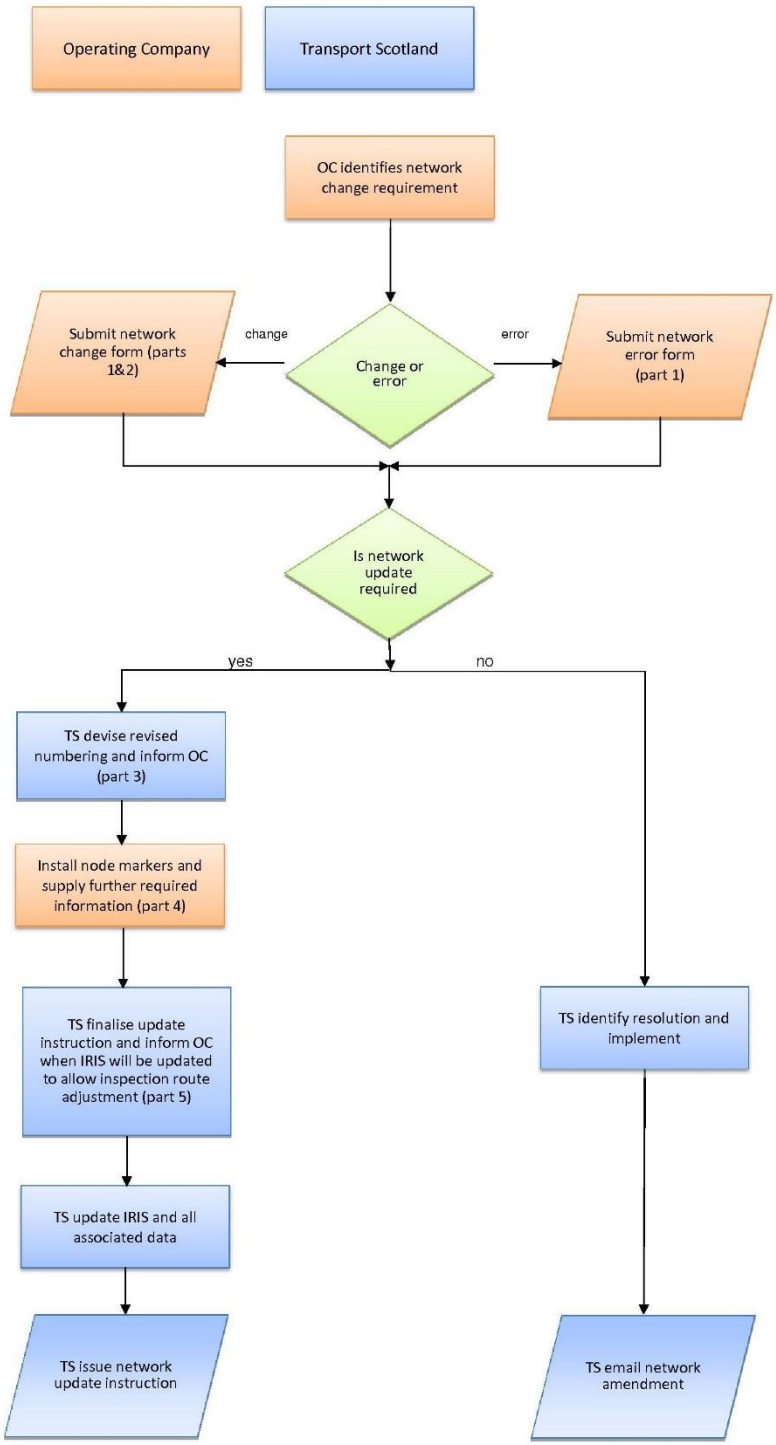

NETWORK CHANGE FORM

Version 1.2, 22 October 2013

TRANSPORT SCOTLAND

1 GENERAL

Name of person submitting the notification

Insert Unit name

Submitted by

Date

Insert date of submission

Unit

Route

Insert route number

ctions

Insert section number(s) affected

Location

Insert scheme name where applicable

Reason for change

Insert the reason for the proposed network change : Major scheme, minor scheme, roundabout, etc

Details of proposed correction

Enter details of the proposed correction in general terms

2 INFORMATION SUPPLIED BY OPERATING COMPANY

	Check	Date
Scheme layout plans at 1:2500 as detailed in Schedule 4 Part 2	☐	
Estimated opening date of scheme	☐	

Note: relevant plans should be submitted at least 4 weeks prior to scheme opening

3 TRANSPORT SCOTLAND FEEDBACK

New referencing sections and node locations devised / agreed	☐	
Operating Company informed of section numbers and node locations	☐	

4 OPERATING COMPANY FURTHER INFORMATION SUPPLIED

Node markers installed	☐	
Measured lengths for each new network section	☐	
Measured chainages of existing sections at the start & end of the new scheme	☐	
12 figure OSGR for each installed network node accurate to 1 metre	☐	
Plan of Trunk Road boundary definition	☐	
Pavement construction data (NCSD)	☐	
Scrim site category data	☐	
Node marker location document	☐	

5 TRANSPORT SCOTLAND NETWORK UPDATE

Network update instruction finalised			☐	
IRIS updated	by		☐	
Network update instruction issued	to		☐	

NETWORK ERROR FORM

TRANSPORT SCOTLAND

Name of person submitting the notification

1 GENERAL

Submitted by [ ] Date [ ]

Insert date of submission

Insert Unit name

Unit [ ] Route [ ] ections [ ]

Insert route number

Insert section number(s) affected

Location [ ]

Insert scheme name where applicable

Reason for change / error [ ]

Insert the reason for the change or error

Details of proposed correction [ ]

Enter details of the proposed correction in general terms

2 TRANSPORT SCOTLAND ACTION

	Check	Date
Network update instruction required	☐	

Proposed TS resolution [ ]

Insert details of the proposed solution

TS action taken [ ]

Insert details of actual solution

3 TRANSPORT SCOTLAND NETWORK UPDATE / AMENDMENT

Network update instruction or amendment finalised			
IRIS updated	by		
Network update instruction issued or Network amendment emailed	to to		

NETWORK CHANGE / ERROR FORM NOTES

Network Change

1 GENERAL
The OC submits part 1 identifying the location on the network which may require a numbering change due to a change in characteristic. The reason for change and proposed correction are included.

2 INFORMATION SUPPLIED BY OC
The OC supplies scheme plans to enable TS to identify node locations and revise the referencing where necessary. Parts 1 and 2 are supplied together.

3 TRANSPORT SCOTLAND FEEDBACK
TS devise / agree revised referencing and inform the OC of section numbers and node locations to be used.

4 OPERATING COMPANY FURTHER INFORMATION SUPPLIED
The OC installs node markers, provides measured section lengths, the scheme start and end point chainages on existing sections, 12 digit OSGRs of node postions accurate to 1 metre, pavement construction data on the NCSD form, new SCRIM categories on the SCRIM category notification form and the node marker location document.

5 TRANSPORT SCOTLAND NETWORK UPDATE
TS finalise the network instruction, advise the OC when the update to IRIS with all the relevant data will be done and issue the instruction when this is complete.

Network Error

1 GENERAL
As per Network Change

2 TRANSPORT SCOTLAND ACTION
TS decide if a network update instruction is required and formulate the resolution to the error then record what action was taken.

3 TRANSPORT SCOTLAND NETWORK UPDATE
TS finalise the network instruction (if necessary), advise the OC when the update to IRIS will be done and issue the instruction or email the amendmentv when this has been done.

This is Annex 4.2/D to Schedule 4 Part 2 referred to in the foregoing Agreement between Scottish Ministers and Amey LG Limited.

SCOTTISH MINISTERS' REQUIREMENTS

SCHEDULE 4 PART 2

INTEGRATED ROADS INFORMATION SYSTEM

ANNEX 4.2/D – Explanation for Change Form

SCOTTISH MINISTERS' REQUIREMENTS

SCHEDULE 4 PART 2

INTEGRATED ROADS INFORMATION SYSTEM

ANNEX 4.2/D – Explanation for Change Form

EXPLANATION FOR CHANGE SOI - MSD

TRANSPORT SCOTLAND

Date supplied to FB

Unit

Route

Work code

Scheme number

Scheme Name

Details of change from approved SOI

Explanation

This is Annex 4.2/E to Schedule 4 Part 2 referred to in the foregoing Agreement between Scottish Ministers and Amey LG Limited.

SCOTTISH MINISTERS' REQUIREMENTS

SCHEDULE 4 PART 2

INTEGRATED ROADS INFORMATION SYSTEM

ANNEX 4.2/E – Design for Node Marker Reference Replacement

SCOTTISH MINISTERS' REQUIREMENTS

SCHEDULE 4 PART 2

INTEGRATED ROADS INFORMATION SYSTEM

ANNEX 4.2/E – Design for Node Marker Reference Replacement

Schedule 4 Part 2 Node Positioning

Section Attributes:						
Route	A77	Unit	SW	Section Codes	end node of	11638/05
					start node of	11638/20
Section Type	Single Carriageway			Section Length		1183
Secttion Description	A77: Bankhead Rbt to End of Climbing Lane					

Design:	
Node Type	2 Thermoplastic core nodes
Node Event Type	Roundabout

Site Image

Location

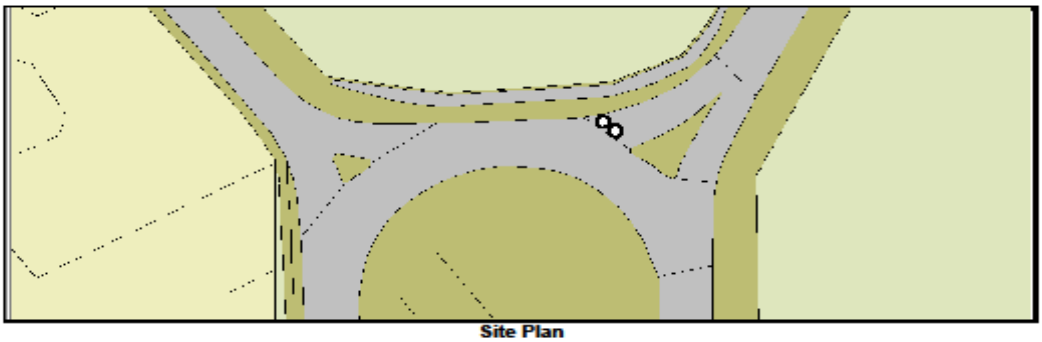

Site Plan

Advisory Update to Data (Changes to section)				
Revised Section Length	1183m	OSGR	Easting	235492
			Northing	619330
Revised Section Description				
Notes				
Location submitted by: Name/Signature		Date		
Location agreed by TS: Name/Signature		Date		
Data update complete: Name/Signature		Date		

SCOTTISH MINISTERS' REQUIREMENTS

SCHEDULE 4 PART 3

ROADSIDE ELECTRICAL ASSETS AND POWER SUPPLIES

CONTENTS **Page No.**

1.	**ROADSIDE ELECTRICAL ASSETS AND POWER SUPPLIES**	**1**
1.1	Introduction	1
2.	**ROADSIDE ELECTRICAL ASSETS INVENTORY**	**3**
2.1	The Inventory, Energy Inventory and Lighting Management Function of the Integrated Roads Information System	3
2.2	Updating and Maintenance of Inventory and Lighting Management Function of the Integrated Roads Information System	3
2.3	Attributes for Energy Inventory	4
2.4	Arrangement and Reporting of the Energy Inventory	5
2.5	Lighting Central Management System	5
3.	**ELECTRICAL SUPPLIES TO ROADSIDE ELECTRICAL ASSETS**	**6**
3.1	Requirements	6
4.	**PAYMENT FOR ELECTRICAL ENERGY**	**6**
4.1	Un-metered Supplies	6
4.2	Metered Supplies	6

SCOTTISH MINISTERS' REQUIREMENTS

SCHEDULE 4 PART 3

ROADSIDE ELECTRICAL ASSETS AND POWER SUPPLIES

1. ROADSIDE ELECTRICAL ASSETS AND POWER SUPPLIES

1.1 Introduction

1.1.1 This Part gives information relating to the roadside electrical assets which includes electrical equipment, lighting, luminaires and associated control apparatus, power supplies, associated infrastructure, structures and other supporting arrangements to be managed and maintained by the Operating Company, either as a whole or in joint responsibility with others as detailed in this Part. Paragraphs 1.1.3, 1.1.4 and 1.1.5 of this Part, together with LDS8023 - *Electrical Maintenance Guidelines for Roadside Electrical Assets, Lighting and Power Supplies* provide the scope of the roadside electrical assets to be managed and maintained.

1.1.2 Associated infrastructure includes as a minimum power supply cabinets, distribution enclosures, protection devices, cabling, associated ducting and chambers.

1.1.3 The roadside electrical assets to be managed and maintained solely by the Operating Company in accordance with Schedule 7 Part 1 include as a minimum:

(i) road lighting, flood lighting, underpass lighting, architectural lighting, power supply arrangements for festive lighting, road side services lighting, bus shelter lighting and maintenance lighting within Structures,

(ii) illuminated traffic signs,

(iii) illuminated bollards,

(iv) power supply and downstream distribution network cabinets for roadside electrical assets,

(v) power, communication and signal cabling,

(vi) electrically operated apparatus for maintenance access to Structures,

(vii) electrical ancillary drainage items,

(viii) swing bridge, raising bridge and other moveable bridge equipment,

(ix) electrically operated traffic and emergency vehicle control barriers,

(x) inclement weather signs and snow gates,

(xi) public conveniences and other roadside services,

(xii) school crossing signs,

(xiii) marine and air navigation lights,

(xiv) marine navigational aids,

(xv) wildlife counters,

(xvi) cathodic protection equipment,

(xvii) power supply arrangements to roadside electrical assets for third party use that is accessible from the Unit,

(xviii) remotely controlled 20mph zone warning signs,

(xix) weather stations, road sensors, weather station CCTV cameras, and other weather station sensors forming part of the apparatus for weather monitoring,

(xx) vehicle activated signs,

(xxi) gantry mounted illuminated signs without Traffic Scotland Equipment,

(xxii) traffic signals,

(xxiii) electrical installations within and related to the administration and control buildings associated with Structures,

(xxiv) where fitted, any control and or communications devices relating to or forming part of a lighting central management system as typically mounted on roadside illuminated assets or within associated enclosures, and

(xxv) any other roadside electrical assets installed on the Unit excluding the Traffic Scotland active maintained equipment detailed in paragraph 1.1.4 of this Part.

1.1.4 Transport Scotland's roadside electrical assets which are to be maintained by the Operating Company with others as set out in paragraph 1.1.5 of this Part include Traffic Scotland Equipment complete with electrical, electronic and communications systems and include as a minimum:

(i) gantry mounted illuminated signs with Traffic Scotland Equipment,

(ii) hazard warning signals,

(iii) variable message signs,

(iv) closed circuit television,

(v) automatic number plate recognition cameras,

(vi) emergency telephones,

(vii) matrix signals,

(viii) detector loops and road sensors for vehicle detection,

(ix) communications cabinets, and

(x) any other roadside infrastructure associated with the provision of the Traffic Scotland Service.

1.1.5 The Traffic Scotland Equipment necessary to facilitate provision of the Traffic Scotland Service is split into two discrete components; Traffic Scotland passive maintained and Traffic Scotland active maintained equipment. The Operating Company shall manage and maintain the infrastructure elements (which include as a minimum poles, foundations, masts, cladding and gantries) of the Traffic Scotland active maintained equipment detailed in paragraph 1.1.4 of this Part in accordance with Schedule 7 Part 1, and all Traffic Scotland passive maintained equipment detailed in paragraph 1.1.3 of this Part. The Traffic Scotland active maintained equipment and the cabling, wiring and ducting arrangements for this equipment shall be managed and maintained by the Traffic Scotland Operations and Infrastructure Services Contractor.

1.1.6 The Operating Company shall ensure that all new and replacement road lighting equipment is fully compatible with Transport Scotland's lighting central management system. The installation of such road lighting equipment shall include configuration, integration, and commissioning onto the lighting central management system. When de-energising and re-energising any element of a road lighting asset already on the lighting central management system for any purpose, the Operating Company shall ensure the road lighting asset remains compatible and fully operational with the lighting central management system.

1.1.7 The lighting central management system will be used to control and manage lighting assets on the Trunk Road network. The inventory created within the lighting central management system will automatically update the inventory held within the lighting management function of the Integrated Roads Information System.

2. ROADSIDE ELECTRICAL ASSETS INVENTORY

2.1 The Inventory, Energy Inventory and Lighting Management Function of the Integrated Roads Information System

2.1.1 The Integrated Roads Information System made available for the Operating Company will include a facility to access the following:

(i) an historic inventory of the roadside electrical assets listed in paragraph 1.1.3. using attributes as described in the *Transport Scotland Trunk Road Inventory Manual*,

(ii) an historic energy inventory which is a sub-set of the inventory as described in paragraph 2.1.1 (i) of this Part. This subset has attributes that relate to the energy consumption aspects of the inventory – these attributes are listed in paragraph 2.3.2 of this Part,

(iii) a lighting management function which forms an integral part of the routine maintenance and management function of the Integrated Roads Information System, and

(iv) an intelligent transport systems management function which forms an integral part of the routine maintenance and management function of the Integrated Roads Information System.

2.1.2 The Operating Company shall comply with the requirements of the *Transport Scotland Trunk Road Inventory Manual*.

2.1.3 The Operating Company shall provide such assistance as is required by the Director in order to develop the maintenance and management arrangements for roadside electrical assets on the lighting management function of the Integrated Roads Information System.

2.2 Updating and Maintenance of Inventory and Lighting Management Function of the Integrated Roads Information System

2.2.1 During the period of 26 weeks after Commencement of Service Date 1, the Operating Company shall review and update the historic inventory referred to in paragraph 2.1.1 of this Part, and shall thereafter continuously review, maintain and update the same. Such inventory shall:

(i) be, at all times, in accordance with the *Transport Scotland Trunk Road Inventory Manual*,

(ii) include the energy consumption aspects listed in paragraph 2.3.2 of this Part,

(iii) meet the requirements of the Integrated Roads Information System, and

(iv) meet the requirements of the Director.

2.2.2 An energy inventory shall be submitted to the Director on a monthly basis in accordance with the provisions of paragraph 2.4.1 of this Part. The Operating Company shall notify the Director of any differences found during any updates.

2.2.3 The Operating Company shall ensure that at all times the inventory of roadside electrical assets is updated with all newly installed additional, decommissioned, modified and replaced roadside electrical assets on the Unit. Any such updates shall be introduced into the inventory within seven Working Days after the introduction of the change.

2.2.4 The Operating Company shall, within seven Working Days of notification, amend or update the inventory of roadside electrical assets in the event of any anomalies, inaccuracies or recommendations identified by the Director or any meter administrator appointed by the Director.

2.3 Attributes for Energy Inventory

2.3.1 The Operating Company shall produce an energy inventory of un-metered roadside electrical supply equipment to comply with the requirements of the *Balancing and Settlement Code of Practice 520* issued by ELEXON within the timescales and in accordance with the procedures detailed in paragraph 2.4.1 of this Part.

2.3.2 For Trunk Road un-metered roadside electrical assets, the Operating Company shall populate the inventory with the following attributes:

(i) National Street Gazetteer road reference, Trunk Road number or other agreed unique road reference,

(ii) name of town or the district,

(iii) name of the road,

(iv) Ordnance Survey grid reference,

(v) unit type, model and control gear type,

(vi) identity code shown on unit,

(vii) *Balancing and Settlement Code of Practice 520* charge code,

(viii) rated wattage,

(ix) circuit wattage,

(x) burning hours per annum,

(xi) number of items of this charge code at this location,

(xii) switching regime with appropriate *Balancing and Settlement Code of Practice 520* code,

(xiii) number of photo electric control units or time switches on the item,

(xiv) control charge code with appropriate *Balancing and Settlement Code of Practice 520* code for the control device,

(xv) exit point – Y if yes, N if no, U if unknown, and

(xvi) annual energy usage in kWh.

2.4 Arrangement and Reporting of the Energy Inventory

2.4.1 The Operating Company shall prepare and submit an energy inventory in a format and having the content as consented to by the Director. The bulk of energy to operate roadside electrical assets is purchased through an unmetered arrangement with the distribution network operators in Scotland. Transport Scotland procures energy on a half-hourly basis and is required to submit monthly updates to the distribution network operators. The Operating Company shall prepare and submit the energy inventory by the 21st day of each calendar month, or the first Working Day after the 21st day of each calendar month, to the Director.

2.4.2 The items of roadside electrical assets in the energy inventory shall be grouped by route and shall be listed by starting at the beginning of a route and moving sequentially to the end. Any significant groups of items such as lighting through a built-up area shall be sub-groups of the route.

2.4.3 The energy inventory shall include the information itemised in paragraph 2.3 of this Part within which shall be identified clearly and separately the energy consumption per annum for un-metered supplies, in accordance with the requirements of *Balancing and Settlement Code of Practice 520* issued by ELEXON, for each sub-group within a route, each route within the Unit, the whole Unit, each item code within each route and each item code for the whole Unit.

2.5 Lighting Central Management System

2.5.1 The lighting central management system will be delivered to the Director and the Operating Company by Commencement of Service Date 2. The Operating Company when consented by the Director shall deploy the lighting central management system on an incremental basis to operate the illuminated assets on the Trunk Road network.

2.5.2 The infrastructure for the lighting central management system will include roadside and illuminated asset mounted communications devices which interface with the lighting central management system host via the general packet radio service communications network. Such infrastructure where provided by the Operating Company as part of the Operations, including compatible electronic lamp control gear, shall comply with the requirements of the Specification.

2.5.3 Subject to an Order, the Operating Company shall provide such assistance as may be required by the Director in order to develop the lighting central management system for the maintenance and management of illuminated assets. This shall include the integration and development of the lighting central management system with the lighting management function of the Integrated Roads Information System but shall exclude all work relevant to the collection of inventory information, asset condition and similar as required with paragraph 2.2, paragraph 2.3 and paragraph 2.4 of this Part.

2.6 Intelligent Transport Systems Management Function of the Integrated Roads Information System

2.6.1 The Operating Company shall provide such assistance to the Traffic Scotland Operations and Infrastructure Services Contractor as required by the Director in the management and maintenance of the inventory for Traffic Scotland Equipment held in the intelligent transport systems management function of the Integrated Roads Information System.

3. ELECTRICAL SUPPLIES TO ROADSIDE ELECTRICAL ASSETS

3.1 Requirements

3.1.1 The Operating Company shall ensure that the provision of power supplies to the roadside electrical assets, through appropriate distribution network operators, are safe and remain safe at all times. Such supplies shall be provided in accordance with Transport Scotland's guidance document LDS8006 - *Electricity Supplies to Roadside Electrical Assets and Lighting.*

3.1.2 The Operating Company shall manage and ensure safe operation of all electrical supplies to roadside electrical assets. This shall include the following:

(i) reporting to the appropriate distribution network operator any loss of supply, managing any consequences arising and ensuring restoration of supply,

(ii) repairing any Defect in the downstream distribution network,

(iii) all required inspections, testing, and maintenance of downstream distribution network in accordance with Schedule 7 Part 1,

(iv) notifying any third party of loss of supply to its assets supplied from the Trunk Road distribution network,

(v) record all power supply defects and failures, and

(vi) record in a suitable tabulated form the distribution network operator supply system type and the measured value of the distribution network operator's external earth fault loop impedance i.e. Ze, in ohms, at the point of interface between the distribution network operator and the roadside electrical assets. Both of these parameters shall be those entered in the most up to date applicable British Standard 7671 Certificate for each point of interface. This requirement applies to all distribution network operator supplies that energise roadside electrical assets whether directly or as part of a shared supply installation. The resulting table shall be submitted along with the energy inventory, as required by the Director.

4. PAYMENT FOR ELECTRICAL ENERGY

4.1 Un-metered Supplies

4.1.1 The Operating Company shall provide such assistance as the Director may require in resolving any matter relating to the roadside electrical assets inventory necessary to enable the Director to obtain the un-metered supply certificate.

4.1.2 The Director will make arrangements for the direct payment of un-metered roadside electrical energy used within the Unit.

4.2 Metered Supplies

4.2.1 The Operating Company shall obtain electricity meter readings for supplies to roadside electrical assets within the Unit on a monthly basis and shall provide the information to the Director in the format and detail agreed.

4.2.2 The Director will make arrangements for the direct payment of any metered roadside electrical energy used within the Unit.

SCOTTISH MINISTERS' REQUIREMENTS

SCHEDULE 4 PART 4

DAMAGE TO CROWN PROPERTY AND THIRD PARTY CLAIMS

CONTENTS **Page No.**

1.	**INTRODUCTION**	**1**
1.1	General Requirements	1
1.2	Records	1
2.	**CLAIMS AGAINST THE SCOTTISH MINISTERS**	**1**
2.1	Third Party Claims Notification	1
2.2	Third Party Claims where the Scottish Ministers are Indemnified	2
2.3	Third Party Claims where the Scottish Ministers are not Indemnified	2
2.4	Third Party Claims in respect of Personal Injury	3
2.5	Responsibility for Third Party Claims Arising from Incidents Prior to Contract Expiry Date	3
3.	**DAMAGE TO CROWN PROPERTY**	**3**
3.1	General	3
3.2	Damage to Crown Property of Value of repair of not more than £50,000	4
3.3	Damage to Crown Property of Value of repair of more than £50,000	5
3.4	Exceptions	5
3.5	Damage to Structures	5
3.6	Damage to Crown Property which Occurred Prior to the Commencement of Service Date 1	6
3.7	Damage to Crown Property not Repaired Prior to the Contract Expiry Date	7
4.	**MISCELLANEOUS CLAIMS BY THE SCOTTISH MINISTERS**	**7**
4.1	Other Repairs and Notification	7

ANNEX 4.4/A – Letter Accompanying Third Party Claims Notice Form **9**

ANNEX 4.4/B – Third Party Claims Notice Form **13**

ANNEX 4.4/C – Third Party Claims Operating Company Report Form **23**

ANNEX 4.4/D – Damage to Crown Property Consolidated Report **29**

ANNEX 4.4/E – Form of Assignation of Rights Agreement and Notice of Assignation of Rights **33**

ANNEX 4.4/F – Report of an Incidence of Damage to Crown Property **39**

ANNEX 4.4/G – Notification of the Final Valuation of Repair of an Incidence of Damage to Crown Property 43

SCOTTISH MINISTERS' REQUIREMENTS

SCHEDULE 4 PART 4

DAMAGE TO CROWN PROPERTY AND THIRD PARTY CLAIMS

1. INTRODUCTION

1.1 General Requirements

1.1.1 The Operating Company shall undertake the activities specified in this Part in respect of:

(i) all claims for damages associated with the Unit made by third parties against the Scottish Ministers, and

(ii) Damage to Crown Property, including claims by the Scottish Ministers against third parties.

1.1.2 If a claimant submits a claim to the Scottish Ministers or to Transport Scotland, the Director will acknowledge receipt in writing to the claimant and forward a copy of the claim to the Operating Company for action.

1.1.3 Where a third party claim arises from work undertaken on the Unit by any other organisation appointed by the Scottish Ministers, the Operating Company shall forward the claim to the other organisation within two Working Days and shall advise the claimant in writing within five Working Days of receipt of the claim that it has been passed to the other organisation.

1.2 Records

1.2.1 The Operating Company shall maintain an Electronic Copy of registers and records relating to third party claims and Damage to Crown Property.

1.2.2 The Operating Company shall provide, within five Working Days of the date of the request, any information relating to claims which the Director may request.

1.2.3 The Operating Company shall provide to the Director and the Performance Audit Group secure remote access at all times to the Electronic Copy of all registers and records relating to third party claims and Damage to Crown Property, using the contract control and management function of the Integrated Roads Information System.

2. CLAIMS AGAINST THE SCOTTISH MINISTERS

2.1 Third Party Claims Notification

2.1.1 The Operating Company shall maintain an Electronic Copy of all records containing details of the actions carried out by the Operating Company in dealing with third party claims and related matters. These records shall include as a minimum the following documents:

(i) third party claims notice forms,

(ii) third party claims Operating Company report forms,

(iii) associated spreadsheets,

(iv) letters,

(v) explanatory notes, and

(vi) completed Department for Work and Pensions *Notification of Claim for Compensation (CRU1)* forms.

2.1.2 Within two Working Days after receipt of notification of a claim made against the Scottish Ministers, the Operating Company shall issue an acknowledgement to the claimant or the claimant's agent, enclosing the third party claims notice form shown at Annex 4.4/B of this Part with a duly completed letter in the form of the proforma letter shown in Annex 4.4/A of this Part, advising them to complete the form and return it to the Operating Company. No other documentation shall be issued by the Operating Company to the claimant or the claimant's agent.

2.1.3 When dealing directly with the claimant or the claimant's agent, the Operating Company shall ensure that all letters and other correspondence sent at the time of the initial intimation of claim or preliminary information gathering process are in accordance with the proforma letter. No indication shall be given in any correspondence relating to the claim that it is subject to any jurisdiction other than that of the Scottish courts, unless it is the subject of legal proceedings raised in a court outwith the jurisdiction of the Scottish courts.

2.2 Third Party Claims where the Scottish Ministers are entitled to be Indemnified

2.2.1 In respect of third party claims, the Scottish Ministers shall be indemnified by the Operating Company in accordance with the other provisions of this Contract, including as a minimum the provisions of Schedule 1 Part 4.

2.2.2 The Operating Company shall deal directly with the claimant where the Scottish Ministers are entitled to be so indemnified.

2.2.3 The Operating Company shall process all third party claims in a courteous, fair and timely manner.

2.2.4 The Operating Company shall put in place a process for dealing with appeals by a claimant.

2.3 Third Party Claims where the Scottish Ministers are not Indemnified

2.3.1 Should the Operating Company consider that the Scottish Ministers are not entitled to be indemnified in respect of any claim, within five Working Days of the receipt of a completed third party claims notice form from a claimant, the Operating Company shall provide to the Director a summary of the reasons why the Scottish Ministers are not entitled to be so indemnified and state which exceptions apply in accordance with the provisions of Schedule 1 Part 4.

2.3.2 Should the Director decide that the Scottish Ministers are entitled to be indemnified in respect of any claim, the Director will notify the Operating Company in writing of his decision and such claim shall be dealt with by the Operating Company in accordance with the provisions of paragraph 2.2 of this Part.

2.3.3 Should the Director decide that the Scottish Ministers are not entitled to be indemnified in respect of any claim, the Director will notify the Operating Company in writing of his decision. Within five Working Days of receipt of such notification, the Operating Company shall supply the Director with all information related to each

incident giving rise to a claim where the Scottish Ministers are not entitled to be indemnified, and shall include as a minimum:

(i) the completed third party claims notice form in the format shown in Annex 4.4/B, and

(ii) a completed third party claims Operating Company report form in the format shown in Annex 4.4/C of this Part.

2.3.4 The Director will be entitled to recover from the Operating Company any losses and expenses suffered by the Scottish Ministers and or the Director as a result of any inadequacy or inaccuracy in the information provided by the Operating Company which it is required to hold and provide to the Director in accordance with the provisions of this Contract. Such losses and expenses shall be deducted from the next payment or any subsequent payment due to the Operating Company pursuant to the other provisions of this Contract or, at the option of the Scottish Ministers, shall be recoverable from the Operating Company as a debt due to the Scottish Ministers.

2.3.5 The Operating Company shall not make any admission of liability on its own behalf, or on behalf of the Scottish Ministers, in respect of any matters pertaining to third party claims where the Scottish Ministers are not entitled to be indemnified.

2.4 Third Party Claims in respect of Personal Injury

2.4.1 In the event of a third party claim for personal injury, the Operating Company shall notify the Department for Work and Pensions Compensation Recovery Unit within 14 days of receipt of the claim, using the Department's *Notification of Claim for Compensation (CRU1) form which is available on the Department for Work* and Pensions website.

2.5 Responsibility for Third Party Claims Arising from Incidents Prior to Service End Date

2.5.1 In accordance with the requirements of this Part, the Operating Company shall deal with all third party claims arising from incidents that occur before the Service End Date. Such claims shall continue to be the responsibility of the Operating Company after the Service End Date.

3. DAMAGE TO CROWN PROPERTY

3.1 General

3.1.1 Damage to Crown Property includes without restriction:

(i) damage caused by third parties,

(ii) theft,

(iii) damage caused by theft and attempted theft,

(iv) vandalism,

(v) spillages,

(vi) shed loads, and

(vii) debris from road traffic accidents or from other causes.

3.1.2 Repair of Damage to Crown Property means repair and any associated clearing, cleaning, assessment, Design, renewal and replacement to make good Damage to Crown Property.

3.1.3 When the Operating Company becomes aware of any incidence of Damage to Crown Property, it shall immediately:

(i) arrange for the damage to be assessed and repaired,

(ii) enter details of the incident into the contract control and management function of the Integrated Roads Information System and thereafter update the contract control and management function of the Integrated Roads Information System with further relevant information as soon as it becomes known, and

(iii) include the unique damage reference number generated by the contract control and management function of the Integrated Roads Information System in any related Operations Instruction.

3.1.4 The Operating Company shall maintain a Damage to Crown Property Consolidated Report in the format shown in Annex 4.4/D of this Part, and shall provide an Electronic Copy to the Director every three months.

3.2 Damage to Crown Property of Value of repair of not more than £50,000

3.2.1 The Operating Company shall undertake all repairs of Damage to Crown Property where the valuation of repair of individual incidents is not more than £50,000, unless the damage was a result of the exceptions referred to in paragraph 3.4 of this Part.

3.2.2 The Scottish Ministers and the Operating Company shall execute an Assignation of Rights Agreement (in the form shown in Annex 4.4/E of this Part) prior to Commencement of Service Date 1.

3.2.3 After the Operating Company has undertaken repair of Damage to Crown Property, the following provisions shall apply:

(i) the Operating Company is entitled to send to the person or organisation causing the Damage to Crown Property a Notice of Assignation of Rights (in the form shown in Annex 4.4/E of this Part) which has been addressed to that person or organisation and which describes the relevant Damage to Crown Property,

(ii) issue of such Notice of Assignation of Rights shall at the same time be notified to the Scottish Ministers in accordance with this Contract,

(iii) the Operating Company may pursue a claim in its own right against the person or organisation causing the Damage to Crown Property to recover the costs incurred in the repair of Damage to Crown Property that it has undertaken as Core Operations and may keep the proceeds of any successful claim, and

(iv) the Operating Company shall indemnify and keep indemnified the Scottish Ministers against all losses, actions, claims, costs, damages, demands and expenses (including but not limited to all legal costs and disbursements) arising in connection with any claim which the Operating Company makes against a person or organisation pursuant to the Assignation of Rights

Agreement and any Notice of Assignation of Rights. Such losses, actions, claims, costs, damages, demands and expenses shall be deducted from the next payment or any subsequent payment due to the Operating Company pursuant to the other provisions of this Contract or, at the option of the Scottish Ministers, shall be recoverable from the Operating Company as a debt due to the Scottish Ministers.

3.2.4 The Operating Company shall not make or commence any claims, actions or proceedings whatsoever in the name of the Scottish Ministers in connection with repair of Damage to Crown Property pursuant to any rights of subrogation. The Operating Company undertakes to the Scottish Ministers:

(i) not to exercise any rights of subrogation that the Operating Company may have in connection with repair of Damage to Crown Property, and

(ii) not to assign or otherwise transfer to a third party, or permit a third party to exercise, any rights of subrogation that the Operating Company may have in connection with repair of Damage to Crown Property.

3.3 Damage to Crown Property of Value of repair of more than £50,000

3.3.1 Subject to an Order, the Operating Company shall undertake all repair of Damage to Crown Property where the valuation of repair of individual incidents is more than £50,000.

3.3.2 Where the estimated valuation of repair of Damage to Crown Property for an individual incident is more than £50,000, the Operating Company shall immediately after discovery of the Damage to Crown Property notify the Director in writing and within five Working Days of notification submit to him a Report of an Incidence of Damage to Crown Property in the format shown in Annex 4.4/F of this Part.

3.3.3 The Director will pursue recovery of Transport Scotland's costs of repair and associated costs of police reports and of establishing, maintaining and removing traffic management prior to repair Operations.

3.3.4 Within 20 Working Days of completing a repair of Damage to Crown Property of individual value of repair of more than £50,000, the Operating Company shall provide the Director with a Notification of the Final Valuation of Repair of an Incidence of Damage to Crown Property report in the format shown in Annex 4.4/G of this Part, and shall provide invoices, sub-contractor costs and all other relevant information. The valuation listed and totalled within this report shall be deemed to be whole and final in respect of such an incidence of Damage to Crown Property.

3.4 Exceptions

3.4.1 When an incident causing Damage to Crown Property has resulted in a fatality, or has been solely caused by a vehicle operated by a United Kingdom and or Scottish Government department or agency, the Director will deal with the pursuit of claims. The Operating Company shall operate as if the repair valuation is greater than £50,000 and repair of Damage to Crown Property shall be subject to an Order.

3.5 Damage to Structures

3.5.1 Where in carrying out the Operations or otherwise the Operating Company becomes aware of any damage to a Structure having occurred, the Operating Company shall

notify the Director by telephone as soon as possible and within one Working Day confirm the details in writing to the Director.

The Director may require repairs to damage to a Structure to be undertaken by specialist contractors nominated by the Director. Such requirement will be subject to an Order.

In all cases of Damage to Crown Property where there is damage to a Structure, the Operating Company shall not carry out permanent repairs without the prior written consent of the Director.

3.6 Damage to Crown Property which Occurred Prior to Commencement of Service Date 1

3.6.1 The Operating Company shall liaise with the parties responsible for the maintenance of the relevant part of the Unit. This will be FETA and any previous operating company for any part of the Unit; such previous operating company being, for the purposes of this Part only, being hereinafter referred to as the "Previous Operating Company".

3.6.2 During the period of 20 Working Days prior to Commencement of Service Date 1 the Operating Company shall liaise with FETA and compile a detailed list of Damage to Crown Property within the Unit that will not be repaired prior to Commencement of Service Date 1.

3.6.3 With effect from Commencement of Service Date 1, the Operating Company shall be responsible for the repair of Damage to Crown Property which was previously the responsibility of FETA and which has not been repaired at Commencement of Service Date 1. Subject to an Order the Operating Company shall complete the work under the provisions of this Contract as Ordered Operations.

3.6.4 During the period of 20 Working Days prior to Commencement of Service Date 1 the Operating Company shall liaise with the Previous Operating Company and compile a detailed list of Damage to Crown Property within the Unit that was previously within extent of the network maintained by the Previous Operating Company prior to Commencement of Service Date 1 and which will not be repaired prior to Commencement of Service Date 1.

3.6.5 The Previous Operating Company shall remain responsible for the repair of Damage to Crown Property which occurred prior to Commencement of Service Date 1 where the Previous Operating Company has estimated the valuation of repair of individual incidents to be not more than £50,000 and is not as a result of one of the exceptions listed in paragraph 3.4 of this Part.

3.6.6 If the Previous Operating Company does not fulfil its obligations in respect of paragraph 3.6.5 of this Part, the Scottish Ministers may, subject to an Order, require the Operating Company to complete the work under the provisions of this Contract as Ordered Operations.

3.6.7 On Commencement of Service Date 1, the Operating Company shall become responsible for the repair of Damage to Crown Property within the Unit where the Previous Operating Company has an estimated valuation of repair of individual incidents to be more than £50,000, or where incidents are as a result of the exceptions listed in paragraph 3.4 of this Part. Such repair of Damage to Crown

Property shall be dealt with in accordance with the provisions of paragraphs 3.3.1 to 3.3.4 of this Part.

3.6.8 Unless it is necessary for safety reasons to carry out repairs immediately, the Operating Company shall give not less than 48 hours' notice to the Director and the Previous Operating Company of commencement of repairs of Damage to Crown Property that are to be carried out in accordance with paragraph 3.6.6 of this Part, in order that the Previous Operating Company may witness such repairs.

3.6.9 Within five Working Days of completing a repair of Damage to Crown Property as described in paragraph 3.6.6 of this Part, the Operating Company shall provide the Director with a Notification of the Final Valuation of Repair of an Incidence of Damage to Crown Property report in the format shown in Annex 4.4/G of this Part, and shall provide invoices, sub-contractor costs and all other relevant information. The valuation listed and totalled within this report shall be deemed to be whole and final in respect of such an incidence of Damage to Crown Property.

3.6.10 When required in writing by the Director, the Operating Company shall provide assistance to the Director with any claims against persons causing Damage to Crown Property in incidents occurring prior to Commencement of Service Date 1. Such assistance shall be subject to an Order.

3.7 Damage to Crown Property not Repaired Prior to the Service End Date

3.7.1 During the period of 20 Working Days prior to the Service End Date, the Operating Company shall liaise with the incoming operating company and provide it and the Director with a detailed list of existing Damage to Crown Property that will not be repaired prior to the Service End Date.

3.7.2 Damage to Crown Property that has occurred but not been repaired prior to the Service End Date remains the responsibility of the Operating Company where the valuation of repair of individual incidents is not more than £50,000. Any repairs to such Damage to Crown Property not undertaken within 14 days after the Service End Date or by the due date for a repair, whichever comes later, may be undertaken by another organisation. In such a case the Scottish Ministers shall, at their option, be entitled to either:

(i) recover from the Operating Company the costs incurred by the Scottish Ministers in connection with repair of Damage to Crown Property as a debt due to the Scottish Ministers, or

(ii) deduct the amount of these costs from the next payment or any subsequent payment due, to the Operating Company pursuant to the provisions of this Contract.

4. MISCELLANEOUS CLAIMS BY THE SCOTTISH MINISTERS

4.1 Other Repairs and Notification

4.1.1 If, during the course of any inspections carried out by the Operating Company in terms of this Contract or, in the carrying out of the Operations, the Operating Company becomes aware of required work that is the responsibility of others which, in the opinion of the Operating Company, cannot be repaired by the party

responsible for such within such timescale as would prevent harm occurring to the Unit, it shall notify the Director by email, providing full details.

4.1.2 The Director will issue an Order to the Operating Company if he considers such work necessary.

4.1.3 The Operating Company shall submit to the Director details of any costs incurred in undertaking such work. The Operating Company shall take steps to recover from the appropriate organisation all costs incurred on behalf of the Scottish Ministers and shall reimburse the Scottish Ministers accordingly.

4.1.4 As part of the Operating Company's obligations to repair Damage to Crown Property, where any damage occurs to the following items of Crown Property:

(i) tourist signs,

(ii) boundary signs,

(iii) roadside services signs,

(iv) motoring organisation signs,

(v) Ministry of Defence signs, or

(vi) authorised signs erected by any party other than on behalf of the Scottish Ministers.

or associated vehicle restraint systems the Operating Company shall make the location safe immediately and shall report the damage in writing within two Working Days to the owner of such signs and inform such owner of the culprits, if known.

This is Annex 4.4/A to Schedule 4 Part 4 referred to in the foregoing Agreement between Scottish Ministers and Amey LG Limited.

SCOTTISH MINISTERS' REQUIREMENTS

SCHEDULE 4 PART 4

DAMAGE TO CROWN PROPERTY AND THIRD PARTY CLAIMS

ANNEX 4.4/A – Letter Accompanying Third Party Claims Notice Form

SCOTTISH MINISTERS' REQUIREMENTS

SCHEDULE 4 PART 4

DAMAGE TO CROWN PROPERTY AND THIRD PARTY CLAIMS

ANNEX 4.4/A – Letter Accompanying Third Party Claims Notice Form

Example letter to claimant to accompany the Third Party Claims Notice Form:

Operating Company name and address
Date

Dear Sir or Madam

Your letter dated ---------- / telephone call of -------- * implied a claim arising from an incident on a trunk road or motorway. Please complete the attached form and return it to the address below.

Your attention is drawn to the need to complete medical mandates and the Department of Work and Pensions Compensation Recovery Unit Section where physical injury has been suffered.

Please note that failure to include all relevant information and sketches may delay the processing of your claim.

Yours faithfully

[Signed]
Name
Designation

*delete as appropriate.

This is Annex 4.4/B to Schedule 4 Part 4 referred to in the foregoing Agreement between Scottish Ministers and Amey LG Limited.

SCOTTISH MINISTERS' REQUIREMENTS

SCHEDULE 4 PART 4

DAMAGE TO CROWN PROPERTY AND THIRD PARTY CLAIMS

ANNEX 4.4/B – Third Party Claims Notice Form

SCOTTISH MINISTERS' REQUIREMENTS

SCHEDULE 4 PART 4

DAMAGE TO CROWN PROPERTY AND THIRD PARTY CLAIMS

ANNEX 4.4/B – Third Party Claims Notice Form

Claim Reference Number

The information provided in this form will be handled in accordance with the Data Protection legislation. In addition to the person who issued this form, the information may be shared with the Scottish Ministers, their contractors, insurers and professional advisors. For more information about Data Protection, visit www.ico.gov.uk

Part 1 – About yourself

1. Name ……
2. Address ……
   ……
   ……
   ……
   ……
   ……
3. Daytime Telephone Number (including STD code) ……

Part 2 – About your vehicle (if damaged)

1. Class (e.g. car, lorry, motorcycle, moped, bicycle) ……
2. Make and model ……
3. Registration number (if motor vehicle) ……
4. Name and address of insurers
   ……
   ……
   ……
   ……
5. Policyholder's name (if not claimant) ……
6. Have you claimed from your insurers in respect of this incident? Yes ___ No___
7. If YES, policy number ……

Part 3 – About your incident

1. Time and date of incident ……

2. Location of incident (e.g.M90, 1 mile north of J1A). If you have any photographs relating to the incident, please enclose them. (See also 8 below regarding a sketch)

   …….....

3. In which direction were you travelling? ……..……..

4. Please tick the boxes which best describe conditions at the time of the incident

   The road/footway was wet_____ dry_____ icy_____ other_____

   The weather was clear_____ foggy_____ raining_____ snowing_____ other _____.

5. At what speed were you travelling? …….……...

   (pedestrians should indicate whether they were walking/running etc) ……..

6. What warning signs did you see, if any, immediately before the incident? …….

   ……...

   ……...

7. Brief description of the events leading up to, during and immediately after the incident…….

   …….....

   …….....

   …….....

   …….....

   …….....

   …….....

   …….....

   …….....

   …….....

   …….....

   …….....

   …….....

8. Please provide in the space below a sketch of the location of the incident, showing landmarks such as bridges, road signs, motorway marker posts, etc.

Part 4 – Particulars of damage and/or loss

1. Details of damage to vehicle ……..…….....

……....

…….....

2. Details of damage to property or other material loss ……..

…….

……..……

…….

3. Did you suffer any physical injury as a result of this incident? Yes ____ No____

If YES, please complete the Department of Work and Pensions Compensation Recovery Unit Section of this form. Please also describe your injuries and indicate who treated you and when …….

…….....

…….....

…….....

…….....

…….....

…….....

…….....

…….....

…….....

…….....

4. Amount of claim (please enclose written estimate/receipts) £……...

5 In order to prevent and detect fraud, additional investigations may be carried out as appropriate.

If you are making a claim in respect of personal injuries, please complete the mandates attached. These documents authorise the hospitals, your general practitioner or other health or medical institutions that treated you to provide us with a medical report, disclose your medical history and your medical records only as regards the injuries you sustained arising from the circumstances of this claim. Complete the mandate in BLOCK CAPITALS and do not detach it. We require you to complete more than one mandate if you received treatment at more than one health or medical institution in respect of this incident, as these institutions may not accept photocopies of signed mandates.

Your attention is also drawn to the need to complete the enclosed Department of Work and Pensions Compensation Recovery Unit Section of this form. .

Mandate

(Enter below the full name and address of the hospital, general practitioner or other health or medical institution where you received treatment and to which this mandate relates)

To:
…….....
…….....
…….....
…….....
…….....

I, …… (enter your full name)

of …… (enter your address)

born on …… (enter your date of birth)

hereby authorise you to provide to the Operating Company and/or to the Scottish Ministers a full medical report, full statement of my medical history and all books, medical records, charts, X-rays, notes and other documents held by you relating to me showing or tending to show the nature, extent and cause of all injuries sustained by me on …… [enter date of accident], the treatment received by me since this date and my certificate of discharge, if any.

Signature …… Date ……..

Mandate

(Enter below the full name and address of the hospital, general practitioner or other health or medical institution where you received treatment and to which this mandate relates)

To:
…….....
…….....
…….....
…….....
…….....

I, …… (enter your full name)

of …… (enter your address)

born on …… (enter your date of birth)

hereby authorise you to provide to the Operating Company and/or to the Scottish Ministers a full medical report, full statement of my medical history and all books, medical records, charts, X-rays, notes and other documents held by you relating to me showing or tending to show the nature, extent and cause of all injuries sustained by me on …… [enter date of accident], the treatment received by me since this date and my certificate of discharge, if any.

Signature …… Date ……..

Mandate

(Enter below the full name and address of the hospital, general practitioner or other health or medical institution where you received treatment and to which this mandate relates)

To:
…….....
…….....
…….....
…….....
…….....

I, …… (enter your full name)

of …… (enter your address)

born on …… (enter your date of birth)

hereby authorise you to provide to the Operating Company and/or to the Scottish Ministers a full medical report, full statement of my medical history and all books, medical records, charts, X-rays, notes and other documents held by you relating to me showing or tending to show the nature, extent and cause of all injuries sustained by me on …… [enter date of accident], the treatment received by me since this date and my certificate of discharge, if any.

Signature …… Date ……..

Part 5 – About witnesses to the incident

1. Please provide names and addresses of other occupants of your vehicle (if any)

Name …… Name ……

Address …… Address ……

…… ……..

…… ……..

Name …… Name ……

Address …… Address ……

…… ……..

…… ……..

2. Were the police involved? Yes_____ No_____

If YES, please give details and police reference (if known)

……..…….…….

……..…….…….

3. Please provide names and addresses of other witnesses to the incident and say why they are witnesses (e.g. passer-by, other motorist)

……..…….…….

……..…….…….

……..…….…….

……..…….…….

……..…….…….

……..…….…….

……..…….…….

……..…….…….

……..…….…….

Part 6 – Other information and signature

1. Please use this space to supply any other information that you think is relevant to the claim or to make any other comments

……..…….…….

……..…….…….

……..…….…….

……..…….…….

……..…….…….

……..…….…….

2. Please sign and date the form

Signature ……..……... Date …….

NAME IN BLOCK CAPITALS ……

Department of Work and Pensions Compensation Recovery Unit Section *ONLY TO BE COMPLETED IF*

YOU SUFFERED PHYSICAL INJURY

THE SOCIAL SECURITY (RECOVERY OF BENEFITS) REGULATIONS 1997

Please provide the following which must by law be passed to the Department for Work and Pensions by the party being claimed against. (Do not detach this form)

Full Name ……..

National Insurance No ……..……..

Date of Birth …….. …….

Details of your solicitor or representative (if appropriate)

Name ……..……..

Address
…….

……

Post Code ……..……...

Reference …….

Details of your employment at the time of the incident (if appropriate)

Name of Employer ……..……

…….

……

Post Code ……..……...

Department …….……..

Clock or Works Number …….…….

I declare that the above information is correct to the best of my knowledge.

Signed …… Date ……..……

* Claimant/claimant's representative

Block Capitals ……..…….

* Delete as appropriate

This is Annex 4.4/C to Schedule 4 Part 4 referred to in the foregoing Agreement between Scottish Ministers and Amey LG Limited.

SCOTTISH MINISTERS' REQUIREMENTS

SCHEDULE 4 PART 4

DAMAGE TO CROWN PROPERTY AND THIRD PARTY CLAIMS

ANNEX 4.4/C – Third Party Claims Operating Company Report Form

SCOTTISH MINISTERS' REQUIREMENTS

SCHEDULE 4 PART 4

DAMAGE TO CROWN PROPERTY AND THIRD PARTY CLAIMS

ANNEX 4.4/C – Third Party Claims Operating Company Report Form

SECTION A: SUMMARY INFORMATION

Claim Reference Number: ……..…….…….
Date of Notification of Claim…….…….
Date of transmission of Third Party Claims Notice form to claimant ……..
Date of receipt of completed Third Party Claims Notice form …….
Date of completion of Third Party Claims Operating Company Report form ……
Decision on claim by Operating Company …….

SECTION B: DETAILED REPORT

1. Operating Company ……..….

2. Trunk Road and exact location of incident (sketch, OS extract, photograph etc. shall be attached) ……

3. Date and time of incident] …….....
4. State source of information provided at questions 2 and 3 above ……...……..
   Particulars of witnesses (other than those provided by claimant) to the incident. If Operating Company employees, this shall be stated and precognitions attached.
   Name ……. Address ……
   …….. …….……..

   Name ……. Address ……
   …….. …….……..

5. Were the police involved? Yes……. No……
   If YES, a police report shall be obtained and sent out as soon as possible.

6. Does the claim refer to an incident alleged to be due to roadworks? Yes……
   No ……

   If YES, by whom were the roadworks being carried out? Operating Company…….. Contractor…….. Undertaker……..

7. Contractor, Undertaker name and address if appropriate …..……
……

8. Nature of Roadworks ……..
9. What were the weather and road conditions at the time of the incident? ……..
……

10. Was Winter Service Plant called out? Yes……. No…….
If YES, provide full details……
……

11. Was precautionary treatment carried out at the locus prior to the incident?
Yes…… No…….

If YES, give time, date, spread rates and any other relevant information ……..
……
……

NB In the event that the claimant or a police report alleges that the road surface was icy or had poor skid resistance etc, full details countering or agreeing with this allegation should be given. Pertinent Precautionary Treatment Operations records and carriageway condition survey results shall be included.

12. Is the incident alleged to have been caused through a Defect or obstruction in the road?
Yes…… No…….

If NO, go to question 13.

If YES:

12.1 Had the Operating Company received notice or was it otherwise aware of the Defect or obstruction prior to the incident? .....
……..
……..
……..

12.2 If unaware, please comment on why regular inspections failed to identify the Defect?
……..
……..
……..
……..

12.3 What is the inspection regime for this Trunk Road? (e.g. Safety Inspection, Safety Patrol, Winter Service Patrol)
……..
……..
……..

……..

12.4 Please include records of dates and findings (routine maintenance and management function of the Integrated Roads Information System output) of inspections and patrols immediately before and after this incident

……..
……..
……..
……..
……..
……..

12.5 How was the inspection or patrol carried out? (on foot, by van etc) ……
……..

12.6 If by van, state whether by driver, driver and mate, etc ……
……..

12.7 When had work last been undertaken at the location, and by whom, prior to the incident?

……..
……..
……..
……..

13. Please use this space to give any other relevant information, including details of any Damage to Crown Property.

……..
……..
……..
……..
……..
……..
……..
……..
……..
……..
……..
……..

14. Operating Company's views on liability. Please indicate whether any reasonable action could have prevented this incident and whether there are grounds for treating the claim sympathetically.

……
……
……
……
……
……
……
……
……
……
……
……
……
……
……
……
……
……
……
……
……
……
……

15. Form completed by:

NAME IN BLOCK CAPITALS ……..

Designation …… Telephone No. …….

Signature …… Date ……..

16. Form approved by:

Signature …… Date …….
Job Title.....

This is Annex 4.4/D to Schedule 4 Part 4 referred to in the foregoing Agreement between Scottish Ministers and Amey LG Limited.

SCOTTISH MINISTERS' REQUIREMENTS

SCHEDULE 4 PART 4

DAMAGE TO CROWN PROPERTY AND THIRD PARTY CLAIMS

ANNEX 4.4/D – Damage to Crown Property Consolidated Report

SCOTTISH MINISTERS' REQUIREMENTS

SCHEDULE 4 PART 4

DAMAGE TO CROWN PROPERTY AND THIRD PARTY CLAIMS

ANNEX 4.4/D – Damage to Crown Property Consolidated Report

Title:

Damage to Crown Property Consolidated Report

Operating Company Name ……

Unit ……

Provide data, where the information is known by the Operating Company, from the following fields from the contract control and management function of the Integrated Roads Information System and reference such data to the field name to form a consolidated report listing all incidents of Damage to Crown Property (also refer to [Schedule 4 Part 1]):

(i) unique damage identifier,

(ii) Scheme reference,

(iii) date damage logged,

(iv) date of repair,

(v) location of damage,

(vi) type and extent of damage,

(vii) Structure reference number if applicable,

(viii) names of culprits,

(ix) details of repair,

(x) status with regard to recovery,

(xi) date Director notified, where estimated valuation of repair exceeds £50,000,

(xii) estimated valuation of repair, excluding associated costs,

(xiii) actual valuation of repair excluding associated costs (valued in accordance with Section 10 of Schedule 1),

(xiv) actual valuation of associated costs (valued in accordance with Section 10 of Schedule 1),

(xv) total valuation of repair (the sum of (xiii) and (xiv)),

(xvi) amount recovered from culprit,

(xvii) final Statement number (if appropriate) (which shall be the Statement submitted by the Operating Company in accordance with Section 10 of Schedule 1 that contains the final claim for payment in respect of the incident to which the unique damage identifier applies), and

(xviii) difference between total valuation of repair (xv) and amount recovered from culprit (xvi).

This is Annex 4.4/E to Schedule 4 Part 4 referred to in the foregoing Agreement between Scottish Ministers and Amey LG Limited.

SCOTTISH MINISTERS' REQUIREMENTS

SCHEDULE 4 PART 4

DAMAGE TO CROWN PROPERTY AND THIRD PARTY CLAIMS

ANNEX 4.4/E – Form of Assignation of Rights Agreement and Notice of Assignation of Rights

SCOTTISH MINISTERS' REQUIREMENTS

SCHEDULE 4 PART 4

DAMAGE TO CROWN PROPERTY AND THIRD PARTY CLAIMS

ANNEX 4.4/E – Form of Assignation of Rights Agreement and Notice of Assignation of Rights

AGREEMENT

between

THE SCOTTISH MINISTERS

and

[insert name of Operating Company]

re: DAMAGE TO CROWN PROPERTY

AGREEMENT

between

(1) THE SCOTTISH MINISTERS (the "Scottish Ministers")

and

(2) **[insert name of Operating Company]**, incorporated under the Companies Acts (Company No. [ ]) and having their registered office at [ ] (the "Operating Company")

WHEREAS:

(A) The Scottish Ministers and the Operating Company have entered into a contract for management and maintenance of the Scottish trunk road network- Forth Bridges Unit ("the Contract");

(B) Under paragraph 3.2.1 of Schedule 4 Part 4 of the Contract the Operating Company shall undertake repairs of Damage to Crown Property (as defined in the Contract) in respect of Damage to Crown Property (as defined in the Contract) which has been caused by third parties; and

(C) In order that the Operating Company can obtain title and interest to sue the third parties responsible for the Damage to Crown Property referred to in recital (B), the Scottish Ministers and the Operating Company have agreed and hereby agree that the Scottish Ministers will assign to the Operating Company its rights against third parties in respect of Damage to Crown Property referred to in recital (B).

IT IS HEREBY AGREED BETWEEN THE PARTIES AS FOLLOWS:

1. The Scottish Ministers hereby assign to and in favour of the Operating Company, to the extent that the Scottish Ministers may competently do so, the benefit of the Scottish Ministers' current and future rights against third parties in respect of Damage to Crown Property referred to in recital (B) that occurs after 0000 hours on Commencement of Service Date 1 (as defined in the Contract) and prior to 2400 hours on the Service End Date (as defined in the Contract), including such powers, rights and remedies as may be vested in the Scottish Ministers.

2. The Operating Company may complete and send notices of assignation of rights (in the form set out in the schedule annexed and identified as relative to this Agreement ("the Schedule")) in accordance with paragraph 3.2.3 of Schedule 4 Part 4 of the Contract.

3. This Agreement is governed by Scots law and the Scottish Courts have exclusive jurisdiction to settle any dispute arising out of or in connection with this Agreement: IN WITNESS WHEREOF these presents typewritten on this and the preceding page, together with the Schedule of one page annexed hereto, are executed as follows:

They are signed for and on behalf of The Scottish Ministers

by ……

on ……20xx

at

……

before the witness

Name……

Address……

……

……

……

Authorised Signatory

……

Witness

They are signed for and on behalf of [*insert name of the Operating Company*]

by ……

on ……20xx

at ……

before the witness

Name……

Address……

……

……

……

Director/Company Secretary/Authorised Signatory*

……

Witness

This is the Schedule referred to in the foregoing Agreement between the Scottish Ministers and [insert name of the Operating Company]

Notice of Assignation of Rights: to be typed on the headed notepaper of the Operating Company

To: [Insert name and address of the relevant third party]

Date: [ ]

Dear Sirs

Notice of Assignation of Rights

We hereby give you notice that, by an Agreement dated [ ], a copy of which is annexed hereto, the Scottish Ministers assigned to us the benefit of their rights against you in respect of [insert a full description of the damage caused by the third party] including such powers, rights and remedies as may be vested in the Scottish Ministers.

Yours faithfully

Authorised Signatory

cc: The Director, Trunk Road and Bus Operations, Transport Scotland, Buchanan House, 8th floor, 58 Port Dundas Road, Glasgow, G4 0HF

This is Annex 4.4/F to Schedule 4 Part 4 referred to in the foregoing Agreement between Scottish Ministers and Amey LG Limited.

SCOTTISH MINISTERS' REQUIREMENTS

SCHEDULE 4 PART 4

DAMAGE TO CROWN PROPERTY AND THIRD PARTY CLAIMS

ANNEX 4.4/F – Report of an Incidence of Damage to Crown Property

SCOTTISH MINISTERS' REQUIREMENTS

SCHEDULE 4 PART 4

DAMAGE TO CROWN PROPERTY AND THIRD PARTY CLAIMS

ANNEX 4.4/F – Report of an Incidence of Damage to Crown Property

Title:

Report of an incidence of Damage to Crown Property

Operating Company Name ……

Unit ……

Provide data from the following fields from the contract control and management function of the Integrated Roads Information System and reference such data to the field name (also refer to Schedule 4 Part 1):

(i) unique damage identifier,
(ii) Route number,
(iii) date and time of incident,
(iv) source of this information,
(v) date that the Operating Company first became aware of the Damage to Crown Property,
(vi) location - link, section and chainage and Ordnance Survey Grid Reference,
(vii) Structural reference number, if appropriate,
(viii) description of property,
(ix) type and extent of damage,
(x) cause of damage, including name of culprits,
(xi) are proceedings being taken by police?
(xii) date emergency work was carried out (if any),
(xiii) who carried out emergency work (if any)?
(xiv) road condition e.g. good, rutted,
(xv) weather conditions,
(xvi) was road wet, dry or icy?
(xvii) was Winter Service Plant called out?
(xviii) details of de-icing Operations,
(xix) was precautionary treatment carried out at the locus prior to incident?
(xx) estimated final value,
(xxi) estimated date for final repair,
(xxii) names and addresses of witnesses (if any),
(xxiii) all other relevant information, and
(xxiv) brief account of incident causing damage.

This is Annex 4.4/G to Schedule 4 Part 4 referred to in the foregoing Agreement between Scottish Ministers and Amey LG Limited.

SCOTTISH MINISTERS' REQUIREMENTS

SCHEDULE 4 PART 4

DAMAGE TO CROWN PROPERTY AND THIRD PARTY CLAIMS

ANNEX 4.4/G – Notification of the Final Valuation of Repair of an Incidence of Damage to Crown Property

SCOTTISH MINISTERS' REQUIREMENTS

SCHEDULE 4 PART 4

DAMAGE TO CROWN PROPERTY AND THIRD PARTY CLAIMS

ANNEX 4.4/G – Notification of the Final Valuation of Repair of an Incidence of Damage to Crown Property

The information required by this Annex shall be presented in the form of a report listing against each field name the information relating to such field. The report shall be signed on each page by the Operating Company's Representative or, in his absence, the Scheme manager responsible for Damage to Crown Property and the signatory's name shall be printed or written in block capitals adjacent to each signature.

Fields listed in this Annex shall be those within the contract control and management function of the Integrated Roads Information System and details shall be held for all estimated and final values in the contract control and management function of the Integrated Roads Information System.

Title:

Notification of the Final Valuation of Repair of an Incidence of Damage to Crown Property

The report shall contain information from the following fields and field names to form a header to the report:

(i) unique damage identifier,

(ii) date of repair,

(iii) location of damage, and

(iv) name of culprit.

Each value relating to the incident measured in accordance with [Schedule 2 Part 1], excluding the following associated costs:

(i) police reports, and

(ii) establishing, maintaining and removing traffic management prior to repair Operations,

shall be listed using the following fields to form a section in the report entitled "Section A":

(i) cost sub series,

(ii) description (which shall include the name of and the service provided by each supplier where that supplier is not the Operating Company),

(iii) quantity,

(iv) unit,

(v) rate,

(vi) amount (which shall be the product of fields "unit" and "rate"), and

(vii) subtotal A (which shall be the sum of all fields "amount" in this Section A).

Every associated cost relating to the incident in respect of:

(i) police reports, and

(ii) establishing, maintaining and removing traffic management prior to repair Operations,

shall be listed using the following fields to form a section in the report entitled "Section B":

(i) cost sub series,

(ii) description (which shall include the name of and the service provided by each supplier where that supplier is not the Operating Company),

(iii) quantity,

(iv) unit,

(v) rate,

(vi) amount (which shall be the product of fields "unit" and "rate"), and

(vii) subtotal B (which shall be the sum of all fields "amount" in this Section B).

There shall be a footer containing the following fields:

(i) total (which shall be the sum of the fields "subtotal A" and "subtotal B"),

(ii) final Statement number (which shall be the Statement submitted by the Operating Company in accordance with Clause 10.3 of Schedule 1 and that contains the final claim for payment in respect of the incident to which the unique damage identifier applies),

The Operating Company shall provide full supporting documentation for every value or cost listed in this Annex.

signed for and on behalf of The Scottish Ministers

by ……...Roy Brannen…….

on …..…… December 2014……

at ……Glasgow……...……

…….……
Authorised Signatory

signed for and on behalf of AMEY LG Limited

by
……...……

on ……..… December 2014……

at ……Glasgow……..….

……..…
Director/Company Secretary/
Authorised Signatory*

SCOTTISH MINISTERS' REQUIREMENTS

SCHEDULE 5 PART 1

MANAGEMENT SYSTEM

CONTENTS **Page No.**

1.	**GENERAL REQUIREMENTS**	**1**
1.1	Requirements	1
1.2	Consortium Partnership or Joint Venture	2
1.3	Management System Manager	2
2.	**REQUIREMENTS OF THE QUALITY PLAN**	**2**
2.1	Requirements	2
2.2	Content	2
3.	**REQUIREMENTS FOR ENVIRONMENTAL MANAGEMENT**	**5**
3.1	Requirements	5
4.	**REQUIREMENTS FOR HEALTH AND SAFETY MANAGEMENT**	**6**
4.1	Health, Safety and Risk Manager	6
4.2	Requirements	6
5.	**DIRECTOR'S MONITORING OF THE OPERATING COMPANY'S MANAGEMENT SYSTEM AND QUALITY PLAN**	**7**
5.1	Requirements	7
6.	**INTERNAL AUDITS BY THE OPERATING COMPANY**	**8**
6.1	Requirements	8
6.2	First Internal Audit	9
7.	**AUDITS BY THE PERFORMANCE AUDIT GROUP**	**9**
7.1	Requirements	9
ANNEX 5.1/A – OPERATING COMPANY INTERNAL AUDIT SCHEDULE		**11**
ANNEX 5.1/B – FETA POLICY DOCUMENTS AND PROCEDURES		**15**

SCOTTISH MINISTERS' REQUIREMENTS

SCHEDULE 5 PART 1

MANAGEMENT SYSTEM

1. GENERAL REQUIREMENTS

1.1 Requirements

1.1.1 The Management System shall be established, documented, implemented and maintained to continually improve its effectiveness in compliance with the requirements of this Contract.

1.1.2 The Operating Company shall review and take cognisance of the historic FETA policies and procedures identified in Annex 5.1/B of this Part when preparing the Management System.

1.1.3 The Management System shall be based on a complete assessment of the activities which the Operating Company will undertake and shall not rely on any historic FETA procedures.

1.1.4 The Management System implemented by the Operating Company shall contain a commitment to maintain and continually improve upon the historic processes developed by FETA.

1.1.5 No later than one year after Commencement of Service Date 1, the Operating Company shall ensure that it receives certification of the Management System by a recognised accreditation body to British Standard EN ISO 9001:2008, British Standard EN ISO 14001:2004 and British Standard OHSAS 18001:2007. The scope of certification shall include all Operations performed at all locations required by this Contract. The Management System shall also comply with the requirements of British Standard EN ISO 27001:2005 and take account of the following publications:

(i) *HMG1A Standard Number 1, Technical Risk Assessment*, and

(ii) Communications-Electronics Security Group *Good Practice Guide Number 6 – Outsourcing and Offshoring: Managing the Security Risks*.

1.1.6 The Management System documentation shall include:

(i) documented statements addressing quality, the environment, health and safety and security of information and communications technology,

(ii) documented objectives addressing quality, the environment, health and safety and security of information and communications technology,

(iii) quality, environment and health and safety manuals including:

(a) the scope of the quality, environmental and health and safety aspects of the Management System,

(b) a description of the interaction between the processes for the Management System,

(iv) a Quality Plan meeting the requirements of British Standard ISO 10005:2005 or equivalent and this Part,

(v) documented procedures required by British Standard EN ISO 9001:2008, British Standard EN ISO 14001:2004, British Standard OHSAS 18001:2007 and British Standard ISO/IEC 27001:2005,

(vi) documented procedures required by this Part or other Parts of this Contract,

(vii) documentation required by the Operating Company to ensure the effective planning, operation, measurement and control of its processes for the implementation of this Contract, and

(viii) all Records required by the Management System and the Quality Plan and this Contract.

1.2 Consortium Partnership or Joint Venture

1.2.1 If the Operating Company is a consortium, partnership or joint venture, a single Management System and Quality Plan shall be established for this Contract. All elements of the single Management System shall be presented and headed under the banner of the Operating Company, not as extracts from the Management Systems of any of the individual members of the consortium, partnership or joint venture. All provisions of this Contract shall apply to the Management System and the Quality Plan.

1.3 Management System Manager

1.3.1 The Operating Company shall appoint a Management System Manager in accordance with the requirements of Schedule 5 Part 4.

1.3.2 The Management System Manager shall have the day to day responsibility for all matters related to the Management System. The Management System Manager shall be the Operating Company's point of contact for all day to day issues related to the Management System.

2. REQUIREMENTS OF THE QUALITY PLAN

2.1 Requirements

2.1.1 The Operating Company shall prepare and submit the Quality Plan to the Director in accordance with the requirements stated in Schedule 1 Part 5.

2.1.2 The Quality Plan shall describe the Operating Company's arrangements for the management of quality for all Operations. Arrangements shall include all processes and procedures required by this Contract to fulfil the contractual obligations and meet the requirements and objectives of the Scottish Ministers.

2.1.3 Such arrangements and the Records referred to in paragraph 1.1.3 (viii) of this Part shall evidence compliance with the *Construction Products Regulations 2013* and shall identify all changes to products and specifications and enable the verification and traceability of all processes and products used in connection with Operations and Works.

2.2 Content

2.2.1 The Quality Plan shall identify the sequence and interaction of the Operating Company's processes necessary to fulfil the requirements of the Management System and this Contract.

2.2.2 The Quality Plan shall include details of all hold points identified in or required by this Contract, including Operating Company's Hold Points and the Scottish Ministers' Hold Points.

2.2.3 The Quality Plan shall set out the details of the Operating Company's personnel, including:

(i) the names, roles, responsibilities and authority of the Core Management Team and Key Staff as stated in Schedule 5 Part 4, that are to be employed in Operations. This shall include the line of command and communication links between all parties involved in the delivery of Operations by the Operating Company under this Contract in the form of annotated charts,

(ii) a description of the arrangements for the interfaces with and between the:

(a) Operating Company,

(b) sub-contractors,

(c) sub-consultants,

(d) Works Contractor personnel, and

(e) any other necessary interfaces,

(iii) a description of the arrangements for the interface with the Director and the Director's staff, including any proposals for a partnering leadership board as contemplated by Schedule 3 Part 10 or similar arrangement, and

(iv) a description of the arrangements for the interface with the Performance Audit Group.

2.2.4 The Quality Plan shall stipulate the Operating Company's arrangements for liaison and meetings between the Operating Company and sub-contractors, sub-consultants, Works Contractors, the Director and any third parties or interested parties.

2.2.5 The Quality Plan shall stipulate the Operating Company's arrangements for managing information required by and used in connection with this Contract including as a minimum procedures for:

(i) receiving, recording, storing, managing and transferring information,

(ii) ensuring the security of all information at all times,

(iii) ensuring the integrity and availability of all information at all times,

(iv) preventing the access to information by unauthorised persons, and

(v) preventing the misuse of the information by authorised and unauthorised persons.

2.2.6 The Quality Plan shall stipulate the Operating Company's documented procedures, including method statements, to:

(i) secure the effective implementation of Operations and Works,

(ii) enable the procurement of all activities required for Operations and Works, and

(iii) ensure the provision by the Operating Company to the Director of all information and Records in respect of Operations and Works, including the procurement of such information from others by the Operating Company,

as required by this Contract.

2.2.7 The Quality Plan shall stipulate the Operating Company's documented procedures for the management and control of sub-contracts (including sub-contractors and sub-consultants), including as a minimum its procedures for assessing all sub-contractors and sub-consultants for quality, environmental compliance, health and safety and quality control capabilities.

2.2.8 The Quality Plan shall stipulate the Operating Company's arrangements for Statement and invoice preparation and the provision of documented evidence that it has discharged its obligations under this Contract for everything for which payment under this Contract shall be claimed. This shall include as a minimum documented procedures for complying with the requirements of Clause 10 of Schedule 1.

2.2.9 The Quality Plan shall stipulate regular documented and recorded reviews by the Operating Company of its own performance in fulfilling its obligations under this Contract. These reviews shall encompass:

(i) management reviews and audits to monitor and demonstrate control over the implementation of the Management System, Quality Plan, Operations and Works,

(ii) the control of all documentation, including showing the identification and traceability of documents, document issues and status,

(iii) the control of documentation recording the verification, review, comments, approval, consent to and releases in respect of Operations and Works,

(iv) all documentation and information that this Contract requires the Operating Company to provide to the Director or to keep available at the Operating Company's offices or depots for inspection or audit by, or on behalf of, the Director and the Performance Audit Group,

(v) compliance by the Operating Company with this Part, and

(vi) recording and monitoring of Non-Conformances and the introduction and implementation of any remedial and preventive action.

2.2.10 The Quality Plan shall set out a schedule for each Annual Period for internal audits by the Operating Company of the Operating Company's own activities, sub-contractor activities and sub-consultant activities and the Management System. This schedule shall include the timing and scope of each audit.

2.2.11 The Quality Plan shall identify the persons responsible for the initiation, maintenance and upgrading of the Management System during the Contract Period including as a minimum:

(i) the identification of the persons responsible for monitoring compliance with the Management System in respect of the Operations,

(ii) the identification of the persons responsible for the adequacy of the Management System and Quality Plan and Records produced, and

(iii) the identification of the persons responsible for document control.

2.2.12 The Quality Plan shall document the Operating Company's methods for monitoring and measuring the Management System processes to be able to demonstrate to the Director and Performance Audit Group the ability of its processes to achieve the planned results.

2.2.13 The Quality Plan shall document the Operating Company's arrangements for the measurement and monitoring of the competence and resilience of the staff deployed to deliver the service. This shall include as a minimum collation of Operating Company data required by Schedule 5 Part 6 for staff turnover, staff absence, hours worked per employee and training.

2.2.14 The Quality Plan shall set out procedures to allow:

(i) the implementation of the Integrated Roads Information System,

(ii) the implementation of the Carbon Management System,

(iii) the use of the contract control and management function of the Integrated Roads Information System,

(iv) the collection, recording and updating of data needed to provide a full and accurate inventory of the Trunk Road,

(v) the updating of all Contract documentation to conform to current Legislation, and

(vi) the Operations carried out on the Unit to be fully compatible with the Traffic Scotland Operations and Infrastructure Services Contractor's operational procedures for the public transport corridor and the Safety Management Review System.

2.2.15 The Quality Plan shall make provision for any other matter which may be brought to the attention of the Operating Company by the Director or the Performance Audit Group and which as a result shall be incorporated into the Management System and the Quality Plan.

3. REQUIREMENTS FOR ENVIRONMENTAL MANAGEMENT

3.1 Requirements

3.1.1 The Management System shall stipulate the Operating Company's arrangements for the effective environmental management of Operations and Works by the Operating Company in accordance with the other provisions of this Contract, statutory requirements and British Standard EN ISO 14001:2004, including as a minimum:

(i) the development of an environmental policy,

(ii) the identification by the Operating Company of environmental aspects, objectives, targets, programmes, training and communication requirements,

(iii) the inclusion by the Operating Company of environmental aspects in method statements and procedures, including those for operational control and emergency response,

(iv) the development of procedures by the Operating Company relating to environmental implementation, control, Records and corrective and preventive action,

(v) the establishment by the Operating Company of a register of relevant legal requirements, and

(vi) procedures to address any other requirements of British Standard EN ISO 14001:2004 that have not been addressed by the Operating Company in other parts of the Management System.

4. REQUIREMENTS FOR HEALTH AND SAFETY MANAGEMENT

4.1 Health, Safety and Risk Manager

4.1.1 The Operating Company shall appoint a Health, Safety and Risk Manager in accordance with the requirements of Schedule 5 Part 4.

4.1.2 The Health, Safety and Risk Manager shall have the day to day responsibility for all matters related to the health and safety requirements of the Management System. The Health, Safety and Risk Manager shall report to the Management System Manager.

4.2 Requirements

4.2.1 The Management System shall stipulate the Operating Company's arrangements for the effective health and safety management of Operations and Works in accordance with the other provisions of this Contract, statutory requirements and British Standard OHSAS 18001:2007 or equivalent, including as a minimum:

(i) the development of a health and safety policy,

(ii) the identification of health and safety aspects, objectives, targets, programmes, training and communication requirements,

(iii) the inclusion of health and safety aspects in method statements and procedures,

(iv) the development of procedures relating to health and safety implementation, control, Records, corrective action and preventive action, and

(v) procedures to address any other requirements of British Standard OHSAS 18001:2007 or equivalent that have not been addressed by the Operating Company in other parts of the Management System.

4.2.2 The Operating Company shall prepare the health and safety part of the Management System based on a complete assessment of the activities which it will undertake and in so doing it shall not rely on any historic FETA procedures.

4.2.3 The Operating Company shall review and take cognisance of the historic FETA operational health and safety policies, procedures and risk assessments identified in Annex 5.1/B of this Part when preparing the health and safety part of the Management System.

4.2.4 The occupational health and safety policy implemented by the Operating Company shall contain a commitment to maintain and continually improve upon the historic processes developed by FETA.

4.2.5 Prior to Commencement of Service Date 1 in the Operating Company shall prepare, and obtain the consent of the Director to, a reference document for special

requirements for working on or in the vicinity of the Forth Road Bridge. This reference document shall:

(i) state requirements with which third parties must comply when working on or in the vicinity of the Forth Road Bridge,

(ii) include reporting requirements for such third parties,

(iii) detail activities which require the consent of the Operating Company before commencement of the same, and

(iv) take cognisance of the historic processes developed by FETA.

This reference document will be continuously updated by the Operating Company following Commencement of Service Date 1.

4.2.6 Prior to Commencement of Service Date 2 the Operating Company shall prepare, and obtain the consent of the Director to, a reference document for special requirements for working on or in the vicinity of the Queensferry Crossing. This reference document shall:

(i) state requirements with which third parties must comply when working on or in the vicinity of the Queensferry Crossing,

(ii) include reporting requirements for such third parties, and

(iii) detail activities which require the consent of the Operating Company before commencement of the same.

This reference document will be continuously updated by the Operating Company following Commencement of Service Date 2.

4.2.7 Forth Ports Limited is responsible for operation of ports in the Firth of Forth and provides the navigation service for vessels passing the Principal Crossings. The Operating Company shall develop a documented procedure for contacting Forth Ports Limited (or any entity which succeeds to their role). The Operating Company shall ensure that, in consultation with Forth Ports Limited (or any such successor), the Operating Company's operational health and safety policies, procedures and risk assessments take full account of potential risks to vessels in the vicinity of the Principal Crossings.

4.2.8 The Operating Company shall assign suitably qualified staff to be members of the bodies listed below and to participate in the activities of the:

(i) Tolling, Tunnels and Bridges Safety Group, and

(ii) Scottish Construction Safety Group.

The Operating Company shall ensure that all of its policies and procedures take full account of the best practice identified by such bodies.

5. DIRECTOR'S MONITORING OF THE OPERATING COMPANY'S MANAGEMENT SYSTEM AND QUALITY PLAN

5.1 Requirements

5.1.1 The Director will have in place procedures for monitoring the Management System and the Quality Plan. These procedures shall result in:

(i) reports, including reports on hazards identified in Hazard Notices and Observations Resulting from Inspection,

(ii) matters subject to Notices of Non-Conformance, and

(iii) matters subject to Defaults, Non-Conformances and Defects including, where appropriate, Notices of Non-Conformance and Remedial Notices,

that will be provided by written notice to the Operating Company.

5.1.2 The Operating Company shall, within a period of eight weeks or other timescale required by this Contract or consented to by the Director in writing, take due cognisance of such reports, correct the Defaults, Non-Conformances and Defects, prevent continuance of the Non-Conformances, investigate the root causes of the Non-Conformances and initiate all necessary actions including, where appropriate, procedural change required to prevent recurrence of any such events.

5.1.3 From time to time it may be considered appropriate by the Director to raise a Notice of Non-Conformance outwith the formal audit process. Should such a situation arise, the Operating Company shall take all necessary corrective actions and initiate all necessary actions required to prevent recurrence of any such events.

5.1.4 The Operating Company shall integrate these corrective and other actions into the Management System and, in particular, into the documented control management and working procedures, including method statements.

6. INTERNAL AUDITS BY THE OPERATING COMPANY

6.1 Requirements

6.1.1 The Operating Company shall meet the requirements of British Standard ISO 9001:2008 for the planning and undertaking of internal audits. During the first Annual Period, the Operating Company shall, as a minimum, undertake auditing of its relevant activities, and the activities of its sub-contractors and sub-consultants as described in Annex 5.1/A of this Part. During the first Annual Period the Operating Company shall undertake audits as described in Annex 5.1/A of this Part in proportion to the number of months in the first Annual Period.

Notwithstanding the minimum requirements in Annex 5.1/A of this Part, the Operating Company shall plan and undertake internal audits according to the status and importance of the processes.

6.1.2 During the second and subsequent Annual Periods, the Operating Company may propose to the Director amendments to the audit programme. Any proposals that seek to omit audits shall be supported by evidence of performance from audits already undertaken under this Contract or by other means. Replacement audits shall be selected on the basis of the status and importance of the processes and the performance of the Operating Company. Changes to the audit programme shall only be implemented with the consent of the Director.

6.1.3 Proposals to omit or replace audits within the second or subsequent Annual Periods shall be submitted to the Director for consent no later than 25 Working Days before the commencement of each Annual Period. Should no such proposals for change to the audit programme be made or if the Director does not give consent to the proposals, then auditing shall be undertaken as described in Annex 5.1/A of this Part.

6.2 First Internal Audit

6.2.1 The Operating Company shall undertake the first internal audit of any element of the Management System no later than 13 weeks after the commencement date of the relevant activity.

7. AUDITS BY THE PERFORMANCE AUDIT GROUP

7.1 Requirements

7.1.1 This Contract provides for the performance of the Operating Company to be audited by the Performance Audit Group. The requirements relating to this are set out in Schedule 5 Part 5.

This is Annex 5.1/A to Schedule 5 Part 1 referred to in the foregoing Agreement between Scottish Ministers and Amey LG Limited.

SCOTTISH MINISTERS' REQUIREMENTS

SCHEDULE 5 PART 1

MANAGEMENT SYSTEM

ANNEX 5.1/A – OPERATING COMPANY INTERNAL AUDIT SCHEDULE

SCOTTISH MINISTERS' REQUIREMENTS

SCHEDULE 5 PART 1

MANAGEMENT SYSTEM

ANNEX 5.1/A – Operating Company Internal Audit Schedule

Operating Company Internal Audit Schedule Annex 5.1/A

Sch No.	Part No	Schedule Title	Part Title	Minimum Audit Frequency
3	1	Administration Procedures for the Operations	Overall Requirements	As agreed
3	2	Administration Procedures for the Operations	Extent of the Unit	Once per year
3	3	Administration Procedures for the Operations	Reference Documents	Once per year
3	4	Administration Procedures for the Operations	Other Contracts Within the Unit	Once per year
3	5	Administration Procedures for the Operations	Communications Strategy, Correspondence, Enquiries and Complaints	Twice per year
3	6	Administration Procedures for the Operations	Customer Contact Services	Once per year
3	7	Administration Procedures for the Operations	Network Operation Services	Twice per year
3	8	Administration Procedures for the Operations	Statutory Functions	Once per year
3	9	Administration Procedures for the Operations	Collaboration Requirements	Once per year
3	10	Administration Procedures for the Operations	Partnering	As agreed
3	11	Administration Procedures for the Operations	Community Benefits	Once per year
4	1	Contract Management, Third Party Claims and Damage to Crown Property	Financial and Contract Management	Twice per year
4	2	Contract Management, Third Party Claims and Damage to Crown Property	Integrated Roads Information System	Once per year
4	3	Contract Management, Third Party Claims and Damage to Crown Property	Roadside Electrical Assets and Power Supplies	Once per year
4	4	Contract Management, Third Party Claims and Damage to Crown Property	Damage to Crown Property and Third Party Claims	Once per year
5	1	Management System, Offices and Depots, Sustainability	Management System	Twice per year
5	2	Management System, Offices and Depots, Sustainability	Records Information and Communication Technology	Once per year
5	3	Management System, Offices and Depots, Sustainability	Reporting and Submission Requirements and Progress Meetings	Once per year
5	4	Management System, Offices and Depots, Sustainability	The Operating Company's Representative, Core Management Team and Key Staff	Once per year
5	5	Management System, Offices and Depots, Sustainability	Audits by the Performance Audit Group	Once per year
5	6	Management System, Offices and Depots, Sustainability	Performance Measurement	Once per year
5	7	Management System, Offices and Depots, Sustainability	Operating Company's Offices and Depots	Once per year
5	8	Management System, Offices and Depots, Sustainability	Environmental Sustainability and Waste	Once per year

Operating Company Internal Audit Schedule Annex 5.1/A

Sch No.	Part No	Schedule Title	Part Title	Minimum Audit Frequency
6	1	Design, Procurement and Certification for the Operations and Works	Procurement and Management of Schemes	Twice per year
6	2	Design, Procurement and Certification for the Operations and Works	Construction (Design and Management) Regulations 2007	Twice per year
6	3	Design, Procurement and Certification for the Operations and Works	Road Safety Audits	Once per year
6	4	Design, Procurement and Certification for the Operations and Works	Design and Certification of Operations and Works	Twice per year
7	1	Management of Operations, Inspections and Maintenance	Management, Inspection and Maintenance	Twice per year
7	2	Management of Operations, Inspections and Maintenance	Winter Service – Pre-Winter	Once per year
7	2	Management of Operations, Inspections and Maintenance	Winter Service – During Winter	Once per year
7	3	Management of Operations, Inspections and Maintenance	Incident Response	Twice per year
7	4	Management of Operations, Inspections and Maintenance	Landscape Development Process and Deliverables	Once per year
7	5	Management of Operations, Inspections and Maintenance	New Roads and Street Works Act 1991	Once per year
7	6	Management of Operations, Inspections and Maintenance	Management and Maintenance of Structures	Once per year
7	7	Management of Operations, Inspections and Maintenance	Structures with Particular Requirements	Twice per year
7	8	Management of Operations, Inspections and Maintenance	Severe Weather Services	Once per year
8	1	Technical Studies and Advice in Connection With the Operations	Abnormal Indivisible Load Routeing	Once per year
8	2	Technical Studies and Advice in Connection With the Operations	Development Management	As agreed
8	3	Technical Studies and Advice in Connection With the Operations	Road Safety and Accident Investigation and Prevention	As agreed
8	4	Technical Studies and Advice in Connection With the Operations	Signs Requiring Authorisation	As agreed

Note: References to year in the above table means the Annual Period.

This is Annex 5.1/B to Schedule 5 Part 1 referred to in the foregoing Agreement between Scottish Ministers and Amey LG Limited.

SCOTTISH MINISTERS' REQUIREMENTS

SCHEDULE 5 PART 1

MANAGEMENT SYSTEM

ANNEX 5.1/B – FETA POLICY DOCUMENTS AND PROCEDURES

SCOTTISH MINISTERS' REQUIREMENTS

SCHEDULE 5 PART 1

MANAGEMENT SYSTEM

ANNEX 5.1/B – FETA Policy Documents and Procedures

Policy Documents:
OH&S Policy: Chief Engineer's General Statement of Intent 2001
Policy on Managing Stress in the Workplace
Safety Procedure 001: Risk Assessment
Safety Procedure 004: First Aid Provision
Safety Procedure 005: Work at HeightSafety Policy 006: Entry into Confined Spaces
Safety Policy 007: Control of Vibration at Work
Safety Procedure 008: Work Allocation

Risk Management Documents:
FETA Risk Management Policy Statement 2011
FETA Risk Management Organisation and Responsibilities 2009
FETA Risk Management Manual - April 2009

Emergency Procedures:
PE001 Fire Evacuation
PE002 Fire Incident
PE003 Suicides
PE004 Rescue Boat
PE005 Suspender Failure
PE006 Spillage of Hazardous Substances
PE007 Mobile Police Units
PE008 South Anchorage Methane Gas Alarm
PE009 Bomb Warning
PE010 Fall Arrest Rescue
PE011 Wind Speed increase during Major Roadworks
PE012 Carriageway Closure due to Major Incident during Major Roadworks
PE013 Setup of Training Room as Incident room
PE014 Major Incident Guidelines
PE016 Incident Management - Priorities and Levels of Response Categories

Standing Instructions:
SI 005 Interim Procedure for Dealing with a Fire Alarm on the Bridge
SI 037 Fire Drill Procedure

Safety Procedures:
PS001 Control of access onto bridge and grounds
PS002 (Spencers)
PS002 Entry into Main Towers
PS003 Entry into Side Towers
PS004 Entry into the Anchorage chambers
PS005 (Spencers) entry into Viaduct Box Girders
PS005 Entry into Viaduct Box Girders
PS006 new Shorrocks (Robbery) Alarm

PS006 old Shorrocks (Robbery) Alarm
PS007 Admin alarm system (Intruder)
PS008 Alarm system maintenance building
PS009 Alarm system boathouse
PS010 Alarm system Anchorage chambers
PS011 Alarm system bridge structure
PS012 Staff security passes
PS013 Visitor security passes
PS014 Issue of keys
PS015 Bridge daily access log
PS016 new test procedure for alarm procedure
PS016 old test procedure for alarm
PS017 Entry onto under deck gantries
PS019 Access into Admin building basement
PS020 Entry onto the Dropped Object Canopy

Note: the above list does not include procedures developed by FETA's contractors for working on the Bridge and its surroundings

Confined Space Entry Requirements:
CS001 Rev 02 - South Anchorage Chamber Confined Space Risk Assessment
CS002 North Anchorage Chamber Confined Space Risk Assessment
CS003 Rev 01 - Main Towers Lift leg and cross girder Confined Space Risk Assessment
CS004 Rev 01 - Box Girders Confined Space Risk Assessment

CSER005 Main towers Cells A & C level 10 to 11 Routine Entry Requirements
CS006 Confined Space Risk Assessment Side Tower crossover beam
CS007 Confined Space Risk Assessment Side Tower legs

CSER008 Main towers Cells A & C level 4C to 5C Routine Entry Requirements
CS009 Main towers non lift leg level 4 cells D and E Confined Space Risk Assessment
CS010 Main towers non lift leg level 1 D cell Confined Space Risk Assessment
CS011 Main towers non lift leg cells B D and E Confined Space Risk Assessment
CS012 Service duct below floor in corridor outside control room
CSER013 Under Floor-New Admin Old Public Toilets Basement Routine Confined Space Entry Requirements
CS014 Main towers Cells a & C level 5C 6C 7C 8C 9C 10C Confined Space Risk Assessment

Note: the above list does not include procedures developed by FETA's contractors for working on the Bridge and its surroundings

Risk Assessments:
MA178 Inspection of box girders (south) east & west
MA179 Inspection of box girders (north) east & west

Other Procedures:
QD025 Weekly Test of Burglar Alarm System

Forms:
Bridge Component data sheet Health & Safety File
Safety Guidelines for Contractors FRB Special Requirements,
Hot Work Permit

Operations Procedures:
PO001 Strong Winds
PO002 Diverting Procedure
PO003 Meteorological Forecast Service
PO004 Traffic Delays
PO005 Vehicle Recovery Service
PO006 Breakdowns (up to 3.5 tons)
PO007 Breakdowns (over 3.5 tons)
PO008 Road Traffic Accidents
PO009 Vehicle Load Restrictions
PO010 Movement of Abnormal Loads
PO011 North Approach Bus Lane use
PO012 Vehicle use on Cycle track and Footways
PO019 Cycle track (Signing and Illumination of Obstructions)
PO020 Standby Call Out
PO021 Fault and Defect Reporting
PO022 Accident Damaged and Abandoned Vehicles
PO028 Sponsored Walk Instructions
PO029 Plaza Barrier
PO030 Radio Procedures
PO031 Major Roadwork's delays
PO032 Cancellation Process for Major Resurfacing Works
PO033 Accident and Damage Reports
PO034 Traffic Scotland Signs
PO035 Bridge Warning Signs
PO037 Traffic Management
PO038 Use of Green Machine General (to be reviewed)
PO039 Use of Green Machine Cleaning (to be reviewed)
PO040 Impact Protection Vehicle (General Driving)
PO041 Operation of Moveable Crash Barrier on the Plazza Central Reserve
PO042 Bridge Fire Alarms Isolation

Patrol Procedures:
PO P01 Patrol Duties (General)
PO P02 Patrols (Slip Roads and Plaza)
PO P03 Patrols (Northbound Carriageway)
PO P04 Patrols (Southbound Carriageway)
PO P05 Patrols (West Footpath)
PO P06 Patrols (East Footpath)
PO P07 Patrols (North Underpass and Stairs)
PO P08 Patrols (Parking Area and Service Roads)
PO P09 Patrols (South Subway and Stairs)
PO P10 Patrols (Footbridge and Toll Route)
PO P11 Patrols (Administration Buildings)
PO P12 Patrols (Maintenance Building)
PO P13 Patrols (Public Toilets)
PO P14 Patrols (Hopetoun Crossroads)
PO P15 Patrols (South Anchorage)
PO P16 Patrols (North Anchorage)
PO P17 Patrols (Boathouse)
PO P18 Patrols (Compressor House)
PO P19 Patrols (Weekly Light Check)
PO P20 Patrols (Potential Suicides)
PO P21 Patrols (Issue of Spotlights)

Maintenance Procedures:
PM001 Access to, and Walking, Lines & Chords
PM002 Aluminium System Staging Below Deck Temporary Working Platform, Main/Side Spans
PM003 Aluminium System Staging Working Platform, General Use
PM004 Routine Maintenance & Movement within the Main Towers, (Category 2 Confined Space Zone)
PM005 Access and General Working, Main Tower Pier Heads & Pier Defences
PM006 Temporary Suspended Access Cradles, General Use and Operation
PM007 Temporary Access Equipment, Inspection & Testing
PM008 Suspended Structure Access Gantries (A&B) General Use and Operation
PM009 Tower Access Platform (Beeche Platform), General Use and Operation
PM010 Viaduct Access Gantries General Use and Operation
PM011 Overhead Sign Gantries (North Approach), General Access
PM012 Preparation and Control of Maintenance Contract Agreements
PM013 Main Cable Access
PM013a Main Cable Access Low Level
PM014 Temporary Main Cable Handstrand wedge installation
PM017 Control of Shared Vertical Workspace
PM018 Temporary Main Cable Suspended Access Cradles, General Use and Operation of Hanger Platform
PM019 Temporary Access Equipment, Inspection & Testing of Hanger/Tirak Cradle
PM020 Isolation of Electrical Equipment or Circuits
PM021 Box Girder Access
PM022 General use and operation of the Mobile Elevating Work Platform

SCOTTISH MINISTERS' REQUIREMENTS

SCHEDULE 5 PART 2

RECORDS, INFORMATION AND COMMUNICATION TECHNOLOGY

CONTENTS **Page No.**

1.	**GENERAL**	**3**
1.1	Records Register	3
1.2	Record Referencing	3
1.3	Management System Requirements	3
1.4	Freedom of Information	3
1.5	Storage	3
1.6	Records Retention Period	4
1.7	Access and Availability	4
1.8	Destruction of Records	4
2.	**HISTORICAL RECORDS**	**4**
2.1	General	4
3.	**CONTEMPORARY RECORDS**	**5**
3.1	General	5
4.	**SUBMISSION OF RECORDS AND RECORDS REGISTER**	**5**
4.1	All Annual Periods	5
4.2	Penultimate Annual Period	5
4.3	Final Annual Period	6
5.	**INFORMATION AND COMMUNICATION TECHNOLOGY**	**6**
5.1	General	6
5.2	Information and Communication Technology System Plan	6
5.3	Notification of Leavers	7
5.4	Computer Systems	7
5.5	Communication Systems	7

ANNEX 5.2/A – Records Retention Periods **9**

ANNEX 5.2/B – Schedule of Records to be Transferred by the Operating Company to a Successor Organisation **15**

ANNEX 5.2/C – Historical Records Report **21**

SCOTTISH MINISTERS' REQUIREMENTS

SCHEDULE 5 PART 2

RECORDS, INFORMATION AND COMMUNICATION TECHNOLOGY

1. GENERAL

1.1 Records Register

1.1.1 The Operating Company shall prepare and maintain a detailed Records Register in electronic format identifying all Records retained at the Central Office, the Records Retention Periods and the expiry date of the Records Retention Period for each Record.

1.2 Record Referencing

1.2.1 Not later than 30 days prior to Commencement of Service Date 1, the Operating Company shall submit its proposals for the Records referencing system for the Records contained within the Records Register for the written consent of the Director.

1.2.2 The referencing system for the Records shall allow the identification of Records with different Records Retention Periods.

1.3 Management System Requirements

1.3.1 The Operating Company shall include documented procedures to control the processes required by this Part in the Management System.

1.4 Freedom of Information

1.4.1 Not later than 30 days prior to Commencement of Service Date 1, the Operating Company shall submit to the Director for written consent details of its policy and documented procedures to meet the requirements of the Information Acts and the *Scottish Public Sector Procurement and Freedom of Information Guidance* issued in *December 2004* by the Scottish Procurement Directorate.

1.5 Storage

1.5.1 From Operations Commencement Date 1 until the Termination Date, the Operating Company shall provide and maintain storage facilities for all Records. Records required in accordance with Annex 5.2/B of this Part shall be stored in electronic format with a minimum resolution of 300 dots per inch for scans, the original software format used to generate the document and or in portable document format (pdf). The Records shall have a defined file structure using the headings given in Annex 5.2/B of this Part. Contemporary Records which do not form part of the Annex 5.2/B requirements shall also be stored in electronic format using the defined file structure, where appropriate. If Contemporary Records do not fit the Annex 5.2/B headings then extra headings shall be added to the file structure by the Operating Company.

1.5.2 Not later than 30 days prior to Commencement of Service Date 1, the Operating Company shall submit details of its proposed storage facilities for electronic and hard copy Records for the written consent of the Director. The storage facilities holding electronic and hard copy Records relating to the Unit shall be located at the Central Office.

The storage facilities shall allow ready retrieval of the Records and both the storage facilities and the Records shall be maintained in good condition and without degradation.

1.5.3 Where Records are created or maintained on a computer or other electronic storage device, the Operating Company shall provide backup storage for the Records and the Records Register in a secure facility which is separate from the Central Office and which shall be subject to the written consent of the Director.

1.6 Records Retention Period

1.6.1 The Operating Company shall retain Records for the Records Retention Period referred to in Annex 5.2/A of this Part.

1.6.2 Where the Records Retention Periods for certain Records are not specified in Annex 5.2/A of this Part, the Records Retention Period shall be six years unless instructed otherwise by the Director.

1.7 Access and Availability

1.7.1 The Operating Company shall provide an Electronic Copy of the Records Register, or any of the Records, to the Director or the Performance Audit Group within five Working Days of receiving a written request from either the Director or the Performance Audit Group.

1.7.2 Contemporary Records shall be provided by the Operating Company in the native electronic file format or an alternative format as agreed with or required by the Director or the Performance Audit Group.

1.8 Destruction of Records

1.8.1 At the end of the appropriate Records Retention Period for any particular Record, the Operating Company shall destroy the Record in a manner which ensures it can no longer be read, copied, duplicated or reproduced.

1.8.2 When any particular Record has been destroyed in accordance with paragraph 1.8.1 of this Part, the Records Register shall be updated to show details of its destruction. The Director will use the Records Register to check from time to time that Records are being destroyed in accordance with these requirements.

2. HISTORICAL RECORDS

2.1 General

2.1.1 During Mobilisation Period 1, the Operating Company shall initiate and, by no later than 90 days after the end of the Mobilisation Period 1, shall obtain a handover of the Historical Records and associated Records Register from the previous operating company. Within 15 Working Days of receiving such Historical Records and the previous operating company's Records Register, the Operating Company shall include all such documents in its Records Register at the Central Office, including the date(s) of delivery to the Central Office.

2.1.2 On Commencement of Service Date 1 the Director will provide the Operating Company with Historical Records from FETA. By no later than six months after Commencement of Service Date 1, the Operating Company shall include all such Records in its Records Register at the Central Office.

2.1.3 Subject to an Order the Historical Records which are received only in hard copy shall be digitised to comply with the storage requirements of this Contract. The Operating Company shall submit a register of Historical Records which it has digitised and for which it proposes to destroy the hard copies to the Director for consent. Destruction of Historical Records shall be subject to the written consent of the Director.

2.1.4 The Operating Company shall check the adequacy of all Historical Records against the details recorded in the Records Register transferred by the previous operating company. Within six months of Commencement of Service Date 1, the Operating Company shall provide a report to the Director in a format that accords with the requirements in Annex 5.2/C of this Part.

2.1.5 Within three months of Commencement of Service Date 2, the Operating Company shall populate the Records Register with those Historical Records from FCBC which the Director has issued to the Operating Company. Within six months of Commencement of Service Date 2, the Operating Company shall provide a report to the Director in a format that accords with the requirements in Annex 5.2/C of this Part.

3. CONTEMPORARY RECORDS

3.1 General

3.1.1 During each Annual Period the Operating Company shall receive, register, file, store and maintain all Contemporary Records in the Central Office.

3.1.2 Contemporary Records shall include a copy in the original software format used to generate the document and a copy in portable document format (pdf).

3.1.3 For Contemporary Records, the Records Register shall be fully searchable, with hyperlinks included to the actual Records.

4. SUBMISSION OF RECORDS AND RECORDS REGISTER

4.1 All Annual Periods

4.1.1 Within five Working Days:

(i) after the commencement of each Annual Period, and

(ii) after the end of the final Annual Period,

the Operating Company shall provide an Electronic Copy of the Records Register referred to in this Part to the Director.

4.1.2 Throughout each Annual Period, the Operating Company shall update the Records Register to reflect changes to the data required to be produced, registered, filed, stored and maintained in the Central Office.

4.2 Penultimate Annual Period

4.2.1 At any time after 31 December in the penultimate Annual Period, the Director may request the Operating Company to provide an Electronic Copy of the Records referred to in Annex 5.2/B of this Part. The Operating Company shall provide these within 25 Working Days of the Director's written request.

4.3 Final Annual Period

4.3.1 During the final Annual Period, the Director shall provide the Operating Company with details of the successor organisation. At any time during the final Annual Period the successor organisation will contact the Operating Company to obtain Records. The Operating Company shall provide suitable facilities to enable the successor organisation to carry out its contractual obligations to obtain Records without unreasonable delay. The Operating Company shall hand over the Records Register and all original Records referred to in Annex 5.2/B of this Part to the successor organisation and shall provide any other information required by the Director. The hand over shall be completed to the satisfaction of the Director no later than 10 Working Days prior to the Termination Date.

5. INFORMATION AND COMMUNICATION TECHNOLOGY

5.1 General

5.1.1 The Operating Company shall appoint a Business Manager and a Network Manager in accordance with the requirements of Schedule 5 Part 4.

5.2 Information and Communication Technology System Plan

5.2.1 Not later than 30 days prior to Commencement of Service Date 1, the Operating Company shall submit its proposed Information and Communication Technology System Plan in writing for the written consent of the Director. If the Director does not give his consent to the proposed Information and Communication Technology System Plan, the Operating Company shall revise it and re-submit it in writing to the Director within 10 Working Days of consent being withheld.

5.2.2 Not later than 30 days prior to Commencement of Service Date 2, the Operating Company shall update its Information and Communication Technology System Plan to take account of any changes required by, and following, the transition from Network 1 to Network 2 and submit such updates for the written consent of the Director. If the Director does not give his consent to the proposed updates the Operating Company shall revise them and re-submit them in writing to the Director within 10 Working Days of consent being withheld.

5.2.3 The Operating Company's Information and Communication Technology System Plan shall contain details of the systems and documented procedures and protocols which the Operating Company shall implement to comply with the requirements of this Contract. The Information and Communication Technology System Plan shall identify, as a minimum:

(i) all electronic hardware and software used to produce Records,

(ii) the backup procedures (including disaster recovery and business continuity) in accordance with the requirements of this Part to ensure availability of systems and equipment and to prevent loss of Records,

(iii) data formats and protocols used to communicate information, and

(iv) the contingency and backup plan to deal with any failure of any communications system.

5.2.4 The Information and Communication Technology System Plan shall be continuously maintained and updated until the Termination Date by the Operating Company.

5.3 Notification of Leavers

5.3.1 The Operating Company shall notify the Director and the Performance Audit Group immediately when individuals, who have been granted access to information and communication technology systems managed by the Director or the Performance Audit Group, leave the Operating Company. The Director and the Performance Audit Group will use this information to disable access permissions to Transport Scotland's information and communication technology systems.

5.4 Computer Systems

5.4.1 The Operating Company shall keep its computer systems under continuous review from Operations Commencement Date 1 until the Service End Date and shall pursue further development and upgrading to ensure that it is able to provide the required services without degradation.

5.4.2 Transport Scotland currently uses the software shown in Table 5.4.2.A and the Operating Company's software shall be capable of producing output which is fully compatible with this.

Table 5.4.2.A

Requirement	Software Utilised
Operating Systems - Servers	Microsoft Windows
Operating Systems – Desktops & Laptops	Microsoft Windows
Email	Microsoft Outlook
Word processing	Microsoft Word
Spreadsheets	Microsoft Excel
Computer Aided Design	AutoCAD and AutoCAD LT
Project Management	Microsoft Project

5.4.3 The Operating Company shall prepare, implement and continuously update a contingency and backup plan to deal with any failure of any computer system, regardless of cause.

5.5 Communication Systems

5.5.1 The Operating Company's communication systems shall ensure that communications links between the various parts of the Operating Company within the Unit are maintained throughout the Contract Period.

5.5.2 The communication systems shall provide communications with and between the:

(i) Central Office, sub-offices and depots,

(ii) Core Management Team,

(iii) Key Staff,

(iv) Operating Company's vehicles, including direct contact with the personnel in charge of the vehicle and between:

(a) all vehicles involved with establishment and maintenance of traffic management,

(b) the Winter Service Manager's vehicle, the Winter Service Duty Officers' vehicles and all Winter Service Plant,

(c) vehicle recovery vehicles, Incident Support Unit vehicles and the Trunk Road Incident Support Service vehicles,

(d) vehicles of supervisory and inspection personnel including those staff nominated to supervise Operations and Works Contracts, and

(e) other key personnel involved in the Operations including all persons nominated to be on call for emergency call out.

5.5.3 The Operating Company shall prepare, implement and continuously update a contingency and backup plan to deal with any failure of any communications system, regardless of cause. The contingency and backup plan shall include:

(i) details of all communication systems, and

(ii) the temporary communication system to be used in the event of failure of any particular communications system.

The detailed contingency and backup plan shall be included in the Operating Company's Information and Communication Technology System Plan.

5.5.4 Irrespective of the use of a temporary communications system, where any communication system or any part of it is inoperative for any reason, the Operating Company shall take all measures satisfactory to the Director to effect a repair or a replacement within 24 hours of the failure.

This is Annex 5.2/A to Schedule 5 Part 2 referred to in the foregoing Agreement between Scottish Ministers and Amey LG Limited.

SCOTTISH MINISTERS' REQUIREMENTS

SCHEDULE 5 PART 2

RECORDS, INFORMATION AND COMMUNICATION TECHNOLOGY

ANNEX 5.2/A – Records Retention Periods

SCOTTISH MINISTERS' REQUIREMENTS

SCHEDULE 5 PART 2

RECORDS, INFORMATION AND COMMUNICATION TECHNOLOGY

ANNEX 5.2/A – Records Retention Periods

Record	**Records Retention Period**
Land Ownership - Interfaces - Boundaries	 In perpetuity In perpetuity
Drainage Outfalls	In perpetuity
Files and other records required by the CDM Regulations	In perpetuity
As Built Drawings: - Roads -Structures (including bar bending schedules) - Electrical - Landscaping Maintenance Manuals	 Until 2 years after deletion from inventory of designed item Until 2 years after deletion from inventory of designed item and then offered back to Transport Scotland Until 2 years after deletion from inventory of designed item Until 2 years after deletion from inventory of item to be maintained
Design Calculations Any models provided by the Director or used for Operations on the Principal Crossings	Until 2 years after deletion from inventory of designed item Until 2 years after deletion from inventory of designed item
Inspection Records - Road Maintenance and Management System Safety Inspection - Road Maintenance and Management System Safety Patrols - Road Maintenance and Management System Detailed Inspections - Structures - General - Principal - Special - Electrical	 Until 10 years after date of inspection Until 10 years after date of inspection Until 10 years after date of inspection Until 2 years after Structure demolished and then offered back to Transport Scotland Until 2 years after Structure demolished and then offered back to Transport Scotland Until 2 years after Structure demolished and then offered back to Transport Scotland Until 10 years after date of inspection

Record	**Records Retention Period**
Investigations	Until 10 years after date of investigation unless involving a Structure in which case until 2 years after Structure demolished.
Surveys - Ground - Topographical - Environmental - Traffic - CCTV	 Until 10 years after date of survey Until 10 years after date of survey Until 10 years after date of survey Until 10 years after date of survey Until 10 years after date of survey
Statutory Orders - Speed Limits - Waiting - Clearway - Traffic Regulations - Compulsory Purchase - Any other Traffic	 Until 10 years after Statutory Order rescinded Until 10 years after Statutory Order rescinded Until 10 years after Statutory Order rescinded Until 10 years after Statutory Order rescinded Until 10 years after Statutory Order rescinded Until 10 years after Statutory Order rescinded Until 10 years after Statutory Order rescinded
Development Control	Until 10 years after adoption
Third Party Claims	Until 5 years after settlement with affected third parties
Accident Records/Reports	In perpetuity
New Roads and Streets Works Act 1991 - Designation - Apparatus - Notices	 Until 10 years after date of Notice Until 10 years after date of Notice Until 10 years after date of Notice
Safety Audits	Until 10 years after date of audit
Abnormal Load Movement Records	Until 10 years after date of record
Final Statements of Intent for structural maintenance Schemes	Until 6 years after completion of the Scheme
Contract Documentation - Conditions of Contract - Bills of Quantities - Specifications	 Until 5 years after financial settlement of each Contract between the Scottish Ministers and Works Contractors
Works activities (Site Records)	Until 5 years after a Works Contract completion
Construction Records - Engineer's construction reports - Material Test Results	 Until 2 years after deletion from inventory Until 2 years after deletion from inventory
Noise Assessment	Until 10 years after final assessment

Record	**Records Retention Period**
Winter Service Records	Until 10 years after date of record
Incident Response Records	Until 10 years after date of record
Reports on Monthly Operations Undertaken by the Operating Company	Until 10 years after date of report
General Correspondence Files	Until 15 years after initiation of file
Supporting cost measurement documentation related to Operations for which Statements have been prepared	Until 6 years after the end of the Non-Conformance Liability Period

This is Annex 5.2/B to Schedule 5 Part 2 referred to in the foregoing Agreement between Scottish Ministers and Amey LG Limited.

SCOTTISH MINISTERS' REQUIREMENTS

SCHEDULE 5 PART 2

RECORDS, INFORMATION AND COMMUNICATION TECHNOLOGY

ANNEX 5.2/B – Schedule of Records to be Transferred by the Operating Company to a Successor Organisation

SCOTTISH MINISTERS' REQUIREMENTS

SCHEDULE 5 PART 2

RECORDS, INFORMATION AND COMMUNICATION TECHNOLOGY

ANNEX 5.2/B – Schedule of Records to be Transferred by the Operating Company to a Successor Organisation

(i) general correspondence files and registers covering general enquires, complaints, requests for information,

(ii) register of media enquiry forms,

(iii) Design and design check register and all documents, Drawings and Certificates referenced therein, including as a minimum calculations for all major maintenance Schemes,

(iv) Any models provided by the Director or used for Operations on the Principal Crossings,

(v) all as-built Records including details of drainage outfalls and road inventories,

(vi) maintenance manuals including all policy standards but not commercial in confidence procedure or process manuals,

(vii) inspection Records and Certificates for routine maintenance and management function of the Integrated Roads Information System, Structures, electrical,

(viii) street lighting maintenance Records,

(ix) roads, Structures and ancillary infrastructure inventory,

(x) deflectograph, sideways coefficient routine investigation machine and high-speed road monitor reports and analyses,

(xi) surveys (ground investigation, topographical, environmental, traffic, closed circuit television,

(xii) traffic regulation orders, compulsory purchase orders and other statutory orders,

(xiii) plans,

(xiv) Drawings,

(xv) development control Records and files,

(xvi) registers and records relating to third party claims and Damage to Crown Property,

(xvii) land ownership details,

(xviii) weather and weather station Records including as a minimum:

(a) data from weather stations,

(b) detailed inspection Records,

(c) calibration Records, and

(d) Records relating to Defects.

(xix) accident Records and reports,

(xx) *New Roads and Street Works Act 1991* data, including as a minimum:

(a) the register of investigations and inspections in relation to NRSWA obligations, and

(b) the register of apparatus installed following the grant of permission in writing pursuant to Section 109 of New Roads and Street Works Act.

(xxi) road safety audits,

(xxii) files and other records required by the CDM Regulations,

(xxiii) abnormal load movements,

(xxiv) final Statements of Intent for structural maintenance Schemes,

(xxv) contract documentation used in connection with Operations within the Unit,

(xxvi) Works (Site) activity Records,

(xxvii) construction Records including as a minimum to:

(a) Engineers' reports,

(b) Records relating to Construction Products Regulations, and

(c) materials test results.

(xxviii) noise assessments Records,

(xxix) investigation Records including as a minimum skid resistance investigations,

(xxx) Winter Service policy, strategy and Records,

(xxxi) Incident Response policy, strategy, Records,

(xxxii) Multi Agency Response Team information folder,

(xxxiii) Carbon Management System Records,

(xxxiv) reports on monthly operations undertaken by the Operating Company,

(xxxv) Scheme specific and detailed information on each Scheme identified in the future budget programmes (to facilitate development of programmes and budgets for the first Annual Period),

(xxxvi) register and Records of tourist, truckstop and special events signing,

(xxxvii) Reports on the Structural Health Monitoring System, Supervisory Control and Data Acquisition system and other systems on the Principal Crossings,

(xxxviii) registers and Records in relation to delegated Statutory Functions,

(xxxix) inventory of all Scottish Minister's property in the possession of the Operating Company,

(xl) photographs; historical and contemporary, recording progress of works and Defects or taken for consultation or communication purposes,

(xli) documents and information required to manage the pension aspects of any onward transfer of any person engaged or employed by the Operating Company or any relevant contractor or sub-contractor, and

(xlii) any other Records identified by the Director and advised to the Operating Company in writing during the Contract Period.

This is Annex 5.2/C to Schedule 5 Part 2 referred to in the foregoing Agreement between Scottish Ministers and Amey LG Limited.

SCOTTISH MINISTERS' REQUIREMENTS

SCHEDULE 5 PART 2

RECORDS, INFORMATION AND COMMUNICATION TECHNOLOGY

ANNEX 5.2/C – Historical Records Report

SCOTTISH MINISTERS' REQUIREMENTS

SCHEDULE 5 PART 2

RECORDS, INFORMATION AND COMMUNICATION TECHNOLOGY

ANNEX 5.2/C – Historical Records Report

Box No Ref	File Heading	Contract Reference	Company	Route	Project Title / Ref	Contents	Year	Retention Period	Owner	Total Page Count	Containment or File Type	Size A0 - A6	B&W or Colour	Confidential Y/N	Resolution (DPI)
1	Plans	Annex 5.2/B Item (xi)	OC (Insert Name)	M8	Tender Documents	Report	2002	10 years	TS	200	Lever Arch file - Hard Copy	A4	B&W	Y	300 DPI *
2	Drawings	Annex 5.2/B Item (xii)	Glasgow Council	ALL	Scheme Management	Drawings	1957	In Perpetuity	TS	1	Plastic Pocket - Hard Copy	A1	Colour	Y	300 DPI *
3	Winter Service	Annex 5.2/B Item (xxvii)	OC (Insert Name)	ALL	Winter Service Plan	Report	2010	10 years	TS	400	Electronic PDF	A4	B&W	Y	300 DPI *

* Sample data.

SCOTTISH MINISTERS' REQUIREMENTS

SCHEDULE 5 PART 3

REPORTING AND SUBMISSION REQUIREMENTS AND PROGRESS MEETINGS

CONTENTS **Page No.**

1.	**INTRODUCTION**	**1**
1.1	General	1
2.	**OPERATING COMPANY'S ANNUAL REPORT**	**1**
2.1	Requirements	1
3.	**REPORTING AND PROGRESS MEETINGS**	**2**
3.1	Requirements	2
ANNEX 5.3/A – REPORTING AND SUBMISSION REQUIREMENTS		**5**
ANNEX 5.3/B – REPORTING AND SUBMISSION INFORMATION TO BE STORED BY THE OPERATING COMPANY		**49**

SCOTTISH MINISTERS' REQUIREMENTS

SCHEDULE 5 PART 3

REPORTING AND SUBMISSION REQUIREMENTS AND PROGRESS MEETINGS

1. INTRODUCTION

1.1 General

1.1.1 This Part gives details of the reporting and submission requirements within this Contract and the obligation on the Operating Company to attend progress meetings.

1.1.2 The Operating Company shall prepare, submit and distribute the reports and submissions specified in Table 5.3.A.1 in Annex 5.3/A of this Part in accordance with the timescale stated.

1.1.3 The Operating Company shall use procedural forms included within the relevant Part of this Contract. Where no procedural form is specified, the Operating Company shall propose a form of report or submission to the Director for his consent. The Operating Company shall use the proposed form when consented to by the Director.

1.1.4 The Operating Company shall provide the reports and submission information detailed in the version of Table 5.3.A.1 current at the time the report and submission is required.

1.1.5 The Operating Company shall ensure that the reporting and submission information referred to in Table 5.3.B.1 in Annex 5.3/B of this Part is collected and is available to the Director and the Performance Audit Group in compliance with the frequencies and timescales stated. The Operating Company shall also ensure that the systems in which this information is stored are capable of providing the information in either a report or submission form, separate from the system in which it is held, within three Working Days after receipt of a request by the Director or the Performance Audit Group.

1.1.6 Reporting and submission information requirements in the *Manual of Contract Document for Highway Works, Volume 1 - Specification for Highways Works* and Schedule 9 are not listed in Tables 5.3.A.1 and 5.3.B.1 of this Part. The Operating Company shall comply with all such requirements as relevant and in the format indicated in such requirements.

2. OPERATING COMPANY'S ANNUAL REPORT

2.1 Requirements

2.1.1 The Operating Company shall produce an annual report describing the overall performance of the Operating Company during the previous Annual Period. This annual report is in addition to any other reports and submissions which are required on an annual basis in accordance with this Contract.

This annual report shall be received by the Director no later than 31 May following the end of the preceding Annual Period.

2.1.2 The annual report shall be a summary of the performance of the Operating Company and shall:

(i) quantify actual performance against the Performance Indicators and Monitoring Indicators stated in Schedule 5 Part 6,

(ii) detail the Payment Adjustment Factors applied, and

(iii) comment on performance trends throughout the Annual Period including areas of strength and weakness.

2.1.3 The Operating Company shall submit its proposals for the format of the annual report to the Director not later than 100 Working Days before the end of the first Annual Period. The Director shall either accept the Operating Company's proposals for the format of the annual report within 30 Working Days of receipt or he will notify the Operating Company, in writing, detailing the aspects of the proposals that are not acceptable.

2.1.4 If the Director does not accept the Operating Company's proposals for the format of the annual report, the Operating Company shall submit revised proposals as required by the Director within 30 Working Days of being notified.

2.1.5 If the Director neither accepts nor advises the Operating Company that the proposals are unacceptable within 40 Working Days of the date of submission the Operating Company may adopt the proposed format after notifying the Director accordingly.

2.1.6 The annual report shall be used to inform the annual meeting between the Operating Company and the Director as referred to in paragraph 3.1.2 of this Part.

3. REPORTING AND PROGRESS MEETINGS

3.1 Requirements

3.1.1 The Operating Company shall attend a meeting every month with the Director at the Director's office, or at such other location as the Director may require, to review the monthly reports and submissions for that month. The purpose of this meeting is primarily to discuss contract management issues and any performance issues in relation to the Performance Indicators and Monitoring Indicators for that month. The date for such meetings will be notified to the Operating Company no later than 30 days prior to the Commencement of Service Date by the Director in writing.

3.1.2 The Operating Company shall attend an annual meeting with the Director at the Director's office, or at such other location as the Director may require, on a date to be notified in writing by the Director. The annual meeting shall be held no later than the last day of June.

The annual meeting shall be held primarily to review the Operating Company's annual report for the previous Annual Period. The Operating Company shall propose a meeting agenda for the Director's prior consent which shall include proposed changes to improve service delivery and value for money for the following Annual Period and any other matters relating to performance or innovation which are not covered within the annual report. The Operating Company shall:

(i) prepare draft minutes detailing the discussions held at the monthly and annual meetings,

(ii) issue these draft minutes for the Director's consent no later than five Working Days after each meeting,

(iii) amend the draft minutes to reflect any comments relating to the minutes made in writing by the Director, and

(iv) issue the final minutes to the Director, with a copy to the Performance Audit Group, within five Working Days of receipt of any comments made by the Director.

This is Annex 5.3/A to Schedule 5 Part 3 referred to in the foregoing Agreement between Scottish Ministers and Amey LG Limited.

SCOTTISH MINISTERS' REQUIREMENTS

SCHEDULE 5 PART 3

REPORTING AND SUBMISSION REQUIREMENTS AND PROGRESS MEETINGS

ANNEX 5.3/A – REPORTING AND SUBMISSION REQUIREMENTS

SCOTTISH MINISTERS' REQUIREMENTS

SCHEDULE 5 PART 3

REPORTING AND SUBMISSION REQUIREMENTS AND PROGRESS MEETINGS

ANNEX 5.3/A – REPORTING AND SUBMISSION REQUIREMENTS

Table 5.3.A.1

Schedule, Part and Title	Paragraph	Description	Frequency	Day or Date [and time]	Issue to Recipients Listed
1,1 - Contract Scope	4.2.1	Register of staff available to carry out Professional Services		Prior to Commencement of Service Date 1	Director
1,1 - Contract Scope	4.2.5	Register of persons who shall be suitably qualified to be in control of the Forth Road Bridge		Prior to Commencement of Service Date 1	Director
		An update to the register of persons who shall be qualified to be in control of the Forth Road Bridge and or the Queensferry Crossing		Prior to Commencement of Service Date 2	
1,1 - Contract Scope	4.5.4	Details of any amendments proposed to be made to Design or Operations on Site	When the Operating Company encounters anything which invalidates its Design assumptions or requires amendments to its method of Operations on site in respect of such Design		Director

Schedule, Part and Title	Paragraph	Description	Frequency	Day or Date [and time]	Issue to Recipients Listed
1,1 - Contract Scope	4.6.1	Validly executed Bond and Undertaking provided by an insurance company or bank acceptable t o the Scottish Ministers and forming Schedule 1, Annex 2, or otherwise acceptable to the Scottish Ministers. The proposed Bond and Undertaking shall be submitted for the prior written acceptance of the Scottish Ministers prior to execution.		No later than 30 days prior to Commencement of Service Date 1	Scottish Ministers
1,1 - Contract Scope	4.10.2	Draft Security Patrol Plan in accordance with the requirements of Schedule 7 Part 7		No less than 30 days prior to Commencement of Service Date 1	Director
		Updated Security Patrol Plan to take account of Network 2		No less than 30 days prior to Commencement of Service Date 2	
		Updated Security Patrol Plan		No later than 10 Working Days prior to the end of each Annual Period	
1,1 - Contract Scope	5.4.1	Written notice whenever any work or foundation is ready to be inspected	When necessary		Director
1,2 – Periods and Programmes	6.1.7(ii)	Proposals for the structure, content and functionality of the Operating Company's Unit-specific website		No later than 30 days prior to Commencement of Service Date 1	Director
1,2 – Periods and Programmes	6.1.7(v)	Training programme		No less than 90 days prior to Commencement of Service Date 1	Director

Schedule, Part and Title	Paragraph	Description	Frequency	Day or Date [and time]	Issue to Recipients Listed
1,2 – Periods and Programmes	6.1.7(vii)	Evidence that the training programme has been complied with and completed		Within 10 Working Days of such training being completed	Director
1,2 – Periods and Programmes	6.1.7(viii)	Recommendations on any changes required to historic FETA procedures to meet the requirements of this Contract		No later than 90 days prior to Commencement of Service Date 1	Director
1,2 – Periods and Programmes	6.2.2(i)	Proposals for updating the Operating company's Unit-specific website to incorporate details relevant to Network 2		No later than 60 days prior to Commencement of Service Date 2	Director
1,2 – Periods and Programmes	6.2.2(iii)	Proposals for the appropriate Operating company's personnel to receive training in relation to the various systems required to operate the Queensferry Crossing and y other matters relevant to the operation of the Queensferry Crossing		No later than six months prior to Commencement of Service Date 2	Director
1,2 – Periods and Programmes	6.2.2(iv)	Evidence that the training programme has been complied with and completed		Within 10 Working Days of such training having been completed	Director
1,2 – Periods and Programmes	6.2.2(v)	Recommendations on any changes required to all information provided by the Director received from FCBC to meet the requirements of this Contract including as a minimum the formulation of procedures and plans		No later than 90 days prior to Commencement of Service Date 2	Director

Schedule, Part and Title	Paragraph	Description	Frequency	Day or Date [and time]	Issue to Recipients Listed
1,3 - Orders, Extensions of Time, Measurement and Payment Provisions	8.1.1	Notification that delay has occurred and the timing and reason for such delay		Within seven days of the cause of delay	Scottish Ministers
		Full and detailed particulars of any claim for extension of time		Within 14 days of the cause of the delay or such longer period as may be consented to by the Scottish Ministers	
1,3 - Orders, Extensions of Time, Measurement and Payment Provisions	10.3.1	Statement	Monthly	Between the eighth and twelfth day of the first calendar months following Operations Commencement Date 1 and thereafter within 14 days after the end of each calendar month.	Scottish Ministers
1,3 - Orders, Extensions of Time, Measurement and Payment Provisions	10.3.9	Statement which in the opinion of the Operating Company is the final value of Operations executed under this Contract		Within 64 weeks of the Service End Date	Scottish Ministers
1,3 - Orders, Extensions of Time, Measurement and Payment Provisions	10.8.2	(i) Claim Notification	Where the Operating Company considers that any additional payment should be made or if the Operating Company is not satisfied with the rates fixed by the Scottish Ministers in	As soon as practicable after becoming aware of the event or circumstance and not later than 28 days after becoming aware, or when the Operating company should have become aware	Scottish Ministers

Schedule, Part and Title	Paragraph	Description	Frequency	Day or Date [and time]	Issue to Recipients Listed
			accordance with Schedule 4 Part 1		
1,3 - Orders, Extensions of Time, Measurement and Payment Provisions	10.8.4	Full and detailed claim which includes all supporting information and justification of the entitlement to the additional payment and the amount considered due		Within 91 days of the claim notification	Scottish Ministers
1,4 – Indemnities and Insurance	12.4.5	Amendments or replacements of insurance documents	When necessary	Within seven days of issue	Scottish Ministers
1,5 – Management System & Change Proposals	13.1.3	Developed and detailed: (i) Management System (ii) Quality Plan (iii) Winter Service Plan (iv) Incident Response Plan		No later than 60 days prior to Commencement of Service Date 1	Scottish Ministers
1,5 – Management System & Change Proposals	13.1.3	Updated plans and Management System to take into account any changes required by and following the transition from Network 1 to Network 2		No later than 30 days prior to Commencement of Service Date 2	Scottish Ministers

Schedule, Part and Title	Paragraph	Description	Frequency	Day or Date [and time]	Issue to Recipients Listed
1,5 – Management System & Change Proposals	13.5.1	Non-Conformance Report	Weekly	From Operations Commencement Date 1 to the Service End Date	PAG
1,6 – Default, Termination and Frustration	15.3.2	Report of the resolution of the Non-Conformance to the Performance Audit Group for consideration		Within any timescale referred to in such Notice of Non-Conformance	PAG
1,6 – Default, Termination and Frustration	15.3.3	Proposed further actions in relation to the Non-Conformance together with the timescales for such actions		Within seven days of PAG's notification that it considers the Operating Company's report of the resolution to be unsatisfactory	PAG
1,6 – Default, Termination and Frustration	15.3.4	Copy of register of Non-Conformances and a progress report	Weekly intervals		Director
1,9 – Tax Matters Including Value Added Tax	21.2.3	Concurrently with the submission of every Statement, a written assessment showing those supplies of goods and services and the values thereof included in each said Statement and on which VAT is properly chargeable on the supply to the Scottish Ministers of any goods or services by the Operating Company under this Contract at a rate other than zero		With the Statement	Scottish Ministers
1,10 – TUPE	22.1.3	Contract Personnel Information	When requested	Within eight weeks of receipt of any request, or such other reasonable period as agreed by the Scottish Ministers	Scottish Ministers

Schedule, Part and Title	Paragraph	Description	Frequency	Day or Date [and time]	Issue to Recipients Listed
1,10 – TUPE	22.1.4	TUPE Information as described in Table 22.1/A		At least 24 months before the Contract Expiry Date	Scottish Ministers
1,10 – TUPE	22.1.5	Any change to any part of the TUPE Information provided in accordance with Clause 22.1.4		Within 14 days of a change or receipt of a request	Scottish Ministers
1,10 – TUPE	22.1.13	Contract Personnel Information and the TUPE Information		Within 21 days of any notice of termination under Clause 16.1	Scottish Ministers
S1 Annex 5 – Insurance Requirements	2.1.1	Evidence of insurance referred to in Tables 2.1.1A	Prior to the commencement of any Operations		Scottish Ministers
3,1 – Overall Requirements	1.6.2	Preparing and issuing agenda, papers and minutes related to the Forth Bridges Forum.	Quarterly		Director
3,5 – Communication Strategy, Correspondence, Enquiries & Complaints	1.2.2	Unit-specific communications plan for the first Annual Period		No later than 25 Working Days prior to the Commencement of Service Date 1.	Director
3,5 – Communications Strategy, Correspondence, Enquiries and Complaints	1.2.4	Updated Unit-specific communications plan	Annually	No later than 25 Working Days prior to the commencement of the second Annual Period and each subsequent Annual Period	Director

Schedule, Part and Title	Paragraph	Description	Frequency	Day or Date [and time]	Issue to Recipients Listed
3,5 – Communications Strategy, Correspondence, Enquiries and Complaints	2.3.2(i)	A briefing note related to the topics in written or oral Parliamentary questions	When required	For written questions, within three Working Days For oral questions, within two Working Days	Director
3,5 – Communications Strategy, Correspondence, Enquiries and Complaints	2.3.2(ii)	A draft reply in editable electronic form	When required	For written questions, within three Working Days For oral questions, within two Working Days	Director
3,5 – Communications Strategy, Correspondence, Enquiries and Complaints	2.3.3	A briefing note and draft reply to the First Minister's questions or topical Parliamentary questions	When required	With the timescale specified by the Director which may be less than one Working Day.	Director
3,5 – Communications Strategy, Correspondence, Enquiries and Complaints	2.4.3 (iii)	A briefing note and draft letter of reply to correspondence, enquiries and or complaints (including verbal or any other form of contact) received from Members of the Scottish Parliament, Members of the United Kingdom Parliament or Members of the European Parliament.	When required	No later than five Working Days after receipt.	Director
3,5 – Communications Strategy, Correspondence,	2.7.4	Proposed arrangements for dealing with media enquiries received between 08:00 hours and 17:00 hours on each day and any received outside these hours	When required	No later than 30 days prior to Commencement of Service Date 1	Director

Schedule, Part and Title	Paragraph	Description	Frequency	Day or Date [and time]	Issue to Recipients Listed
Enquiries and Complaints					
3,7 – Network Operations Services	2.3.5 (i)(d)	Liaison meeting minutes for the meetings called by the Operating Company	When required	Within five Working Days	Director via the Network Manager and relevant Operational Partners
3,7 – Network Operations Services	2.3.5 (ii)	Journey time reliability report	Monthly	No later than fifteenth day of each calendar month until the Service End Date	Director via the Network Manager
3,7 – Network Operations Services	2.3.5 (iii)	Report detailing the impacts of all the Operating Company's activities on the journey time reliability of the Trunk road network	Annually		Director via the Network Manager
3,7 – Network Operations Services	2.3.5(xiii)	Notification in writing of operational conflicts that may impact on the journey time reliability of the Trunk Road network	When required		Director via the Network Manager
3,7 – Network Operations Services	2.6.1	Annex 3.7/B form	When required	At least 15 Working Days prior to Operations, Works Contract or work commencing	Appropriate Network Operations service provider
3,7 – Network Operations Services	2.6.2	Annex 3.7/B nil return	When required	At least 15 Working Days prior to Commencement of Operations, Works Contract or work	Appropriate Network Operations service provider

Schedule, Part and Title	Paragraph	Description	Frequency	Day or Date [and time]	Issue to Recipients Listed
3,7 – Network Operations Services	2.6.3	Copy of the Statement of Intent and Value for Money Assessment	Where a Statement of Intent and Value for Money Assessment identifies that Network Operations equipment may be affected		Network Operations service provider and the Director
3,7 – Network Operations Services	2.7.1	Annex 3.7/C form	When required		Director
3,7 – Network Operations Services	2.8.2	Annex 3.7/D form	When required	Within 24 hours of damage being caused	Network Operations service provider
3,7 – Network Operations Services	3.5.6	Delay management report	When required		Director
3,7 – Network Operations Services	3.7.2	Written proposals for the deployment of automatic traffic delay monitoring equipment	When required		Director
3,7 – Network Operations Services	3.8.1	Written request for consent to the use of vehicle activated signs	When required		Director
3,7 – Network Operations Services	3.9.3	Request for consent to use of mobile variable message signs	When required		Traffic Scotland Operations and Infrastructure Services Contractor

Schedule, Part and Title	Paragraph	Description	Frequency	Day or Date [and time]	Issue to Recipients Listed
3,7 – Network Operations Services	3.10.1	Annex 3.7/C	When the OC proposes the location of any new traffic counting site for undertaking before and after studies		Director and Traffic Scotland Operations and Infrastructure Services Contractor
3,7 – Network Operations Services	4.1.1	Inventory of intelligent transport systems equipment		30 days prior to Commencement of Service Date 2	Director and Traffic Scotland Operations and Infrastructure Service Contractor
3,9 – Collaboration Requirements	1.1.3	Report on potential collaborative opportunities	When required	No later than one month following the identification of a potential collaborative opportunity	Director
3,11 – Community Benefits	1.1.2	Training and employment plan		No later than 30 days prior to Commencement of Service Date 1	Director
4,1 – Financial and Contract Management	4.1.11	(i) a draft 10 year programme of Ordered Operations, Core Operations and Works Contracts (ii) a draft three year programme of Ordered Operations, Core Operations and Works Contracts (iii) a draft one year programme of Ordered Operations. Core Operations and Works Contracts (iv) recommendations for improvements that could be	Annually		Director

Schedule, Part and Title	Paragraph	Description	Frequency	Day or Date [and time]	Issue to Recipients Listed
		incorporated into Operations and Works Contracts (v) recommendations for further investigations required to enable Operations and Works Contract to be accurately defined (vi) outline Bids, including preliminary estimates, for Operations and Works Contracts Schemes for the one, three and 10 year programmes			
4,1 – Financial and Contract Management	4.1.13	Revised Bids	Within the timescales required in Transport Scotland's *Annual Process for Roads Structural Maintenance* and the requirements shown at Figure 4.1.4.A		Director
4,1 – Financial and Contract Management	4.1.19	Revised programme	In the event of deviation from the one year programme		Director
4,1 – Financial and Contract Management	4.1.21	Revised Bids	Where changes occur which have an effect on the financial value of Operations or Works Contracts		Director
4,1 – Financial and Contract Management	Tables 4.1.22.A and 4.1.23.A	Refer to Tables	Refer to Tables	Refer to Tables	Director

Schedule, Part and Title	Paragraph	Description	Frequency	Day or Date [and time]	Issue to Recipients Listed
4,1 – Financial and Contract Management	4.3.7	Proposals for the erection, maintenance and removal of warning signs in accordance with the *Guidance Document for Implementing a Skid Resistance Policy for Transport Scotland*	Following completion of the detailed Site investigations		Director
4,1 – Financial and Contract Management	4.4.5	Where the analysis referred to in paragraph 4.4.3 indicates conditions that may be responsive to a number of different treatments or solutions, a list of the different treatments or solutions together with a relevant whole life costing analysis as part of providing the recommended option	When necessary		Director
4,1 – Financial and Contract Management	4.5.2	Statements of Intent		At least 25 Working Days prior to the commencement of any work	Director
4,1 – Financial and Contract Management	4.5.6	For proposed roads structural pavement maintenance Schemes within Work Series 0100, Statements of Intent and where appropriate Value for Money Assessments	In accordance with the timescales given in Transport Scotland's *Annual Process for Roads Structural Maintenance*		Director
4,1 – Financial and Contract Management	4.5.7	For proposed bridges general maintenance Schemes within Work Series 1200 and with an Estimated Bid Value of more than £50,000: (i) a Statement of Intent – (Scheme approval) for those Schemes with an Estimated Bid Value of under	When necessary		Director

Schedule, Part and Title	Paragraph	Description	Frequency	Day or Date [and time]	Issue to Recipients Listed
		£750,000 for Schemes on the Principal Crossings or under £350,000 for all other Schemes for the Director's consideration using the outline form provided at Annex 4.1/A (ii) for all Schemes with an Estimated Bid Value of more than £750,000 for Schemes on the Principal Crossings or more than £350,000 for all other Schemes, a Statement of Intent – (Inception) together with a Value for Money Assessment (iii) details of any departures from the *Design Manual for Roads and Bridges*, and *Roads for All: Good Practice Guide for Roads* (iv) an approval in principle, where appropriate under the *Design Manual for Roads and Bridges* (v) a list of all accessibility barriers recorded in the routine maintenance and management function of the Integrated Roads Information System on the DDA1 or DDA2 Scheme pro forma provided in Annex 4.1/I and any other barriers identified, with: (a) the estimated cost to resolve each item,			

Schedule, Part and Title	Paragraph	Description	Frequency	Day or Date [and time]	Issue to Recipients Listed
		(b) a recommendation itemising barriers that will be addressed within the proposed Scheme (c) reasons for each item which is not being addressed in the proposed Scheme (vi) any other relevant information in support of the Scheme			
4,1 – Financial and Contract Management	4.5.14	A Statement of Intent - (Scheme approval) using the outline form provided at Annex 4.1/A.	Following the Director's consideration of the Statement of Intent – (Inception), Value for Money Assessments and any further studies and investigations		Director
4,1 – Financial and Contract Management	4.5.16	Report containing recommendations agreed at the technical workshop		Within 25 Working Days of the technical workshop being held	Director
4,1 – Financial and Contract Management	4.6.2	Draft one, three year and 10 year programmes covering all Schemes	Within the timescale referred to in the *Annual Process for Roads Structural Maintenance* and Table 4.1.22.A		Director
4,1 – Financial and Contract Management	4.7.1	Bid reports for the next Financial Year that complement the detailed one year programme.	Within the timescale referred to in the *Annual Process for Roads*		Director

Schedule, Part and Title	Paragraph	Description	Frequency	Day or Date [and time]	Issue to Recipients Listed
			Structural Maintenance and Table 4.1.22.A		
4,1 – Financial and Contract Management	4.7.5	A further Bid relating to an additional Scheme		At least 25 Working Days before the proposed Scheme commencement date	Director
4,1 – Financial and Contract Management	4.14.2	(i) a proposed item description, a unit of measurement and a rate or price deduced from applicable rates and prices, or (ii) a rate or price in accordance with fair rates and prices, with a supporting calculation of the build up of such rate or price, or (iii) a quotation supported by calculations showing the build up of the price.	Where the Operating Company considers that the items within the Schedule of Rates and Prices are not applicable to the Operations to be undertaken		Director
4,1 – Financial and Contract Management	4.14.8	The requirements of paragraph 4.14.2	Where the Operating Company undertakes Operations which were unforeseen at the time of the issue of the Operations instruction and it considers that the series or items within the Schedule of Rates and Prices do not cover the scope of the unforeseen Operations	Within five Working Days of the Scheme Completion Date	Director

Schedule, Part and Title	Paragraph	Description	Frequency	Day or Date [and time]	Issue to Recipients Listed
4,1 – Financial and Contract Management	4.16.3	(i) a new Bid and Scheme Identifier to the Director, using the Work Code 9902 (ii) a revised Bid for the original Scheme created under the 9901 Activation	When the Director decides that any Scheme created under a 9901 Activation or any part of any such Scheme is no longer disputed and notifies the Operating Company accordingly		Director
4,1 – Financial and Contract Management	4.17.4	(i) a revised Bid if any Scheme seems likely to exceed the Total Order Value of the Scheme within the Financial Year (ii) accompanied by a revised Bid for other Schemes within the same Works Series to produce a matching saving (iii) a revised Bid if any Scheme seems likely to be less than the Total Order Value of Scheme within the Financial Year (iv) accompanied by a revised Bid for Operations where the unused budget may be used	Immediately		Director
4,1 – Financial and Contract Management	4.19.1	Electronic Copy and a paper copy of all original Works Contractor payment applications and payment certification forms	When necessary		Director

Schedule, Part and Title	Paragraph	Description	Frequency	Day or Date [and time]	Issue to Recipients Listed
4,3 – Roadside Electrical Apparatus and Power Supplies	4.2.1	Meter readings	Monthly		Director
4,4 – Damage to Crown Property and Third Party Claims	2.3.1	A summary of the reasons why the Scottish Ministers are not indemnified and details of which exceptions apply in accordance with the provisions of Schedule 1 Part 4		Within five Working Days of the receipt of a completed third party claims notice form from a claimant if the Operating company considers that the Scottish Ministers are not indemnified in respect of such claim	Director
4,4 – Damage to Crown Property and Third Party Claims	2.3.3	(i) completed third party claims notice form in the format shown in Annex 4.4/B (ii) completed third party claims Operating Company report form in the format shown in Annex 4.4/C		Within five Working Days of being notified by the Director that Scottish Ministers are not indemnified	Director
4,4 – Damage to Crown Property and Third Party Claims	3.3.2	Report of an Incidence of Damage to Crown Property in the format shown in Annex 4.4/F		Within five Working Days of notification to the Director that the estimated cost of repair exceeds £50,000	Director
4,4 – Damage to Crown Property and Third Party Claims	3.3.4	Notification of the Final Valuation of Repair of an Incidence of Damage to Crown Property report in the format shown in Annex 4.4/G		Within 20 Working Days of completing a repair of Damage to Crown Property > £50,000	Director
4,4 – Damage to Crown Property	3.6.9	Notification of the Final Valuation of Repair of an Incidence of Damage to		Within five Working Days of completing a repair of	Director

Schedule, Part and Title	Paragraph	Description	Frequency	Day or Date [and time]	Issue to Recipients Listed
and Third Party Claims		Crown Property report in the format shown in Annex 4.4/G		Damage to Crown Property as described in paragraph 3.6.6	
4,4 – Damage to Crown Property and Third Party Claims	3.7.1	Detailed list of existing Damage to Crown Property that will not be repaired prior to the Service End Date		20 Working Days prior to the Service End Date	Director and incoming operating company
5,1 – Management System	4.1.5	Reference document for special requirements for working on or in the vicinity of the Forth Road Bridge		Prior to Commencement of Service Date 1	Director
5,1 – Management System	4.1.6	Reference document for special requirements for working on or in the vicinity of the Queensferry Crossing		Prior to Commencement of Service Date 2	Director
5,1 – Management System	6.1.3	Proposals to omit or replace audits	Annually	No later than 25 Working Days prior to the commencement of each Annual Period	Director
5,2 – Records Information and Communication Technology	1.2.1	Proposals for the Records referencing system for the Records contained within the Records Register		Not later than 30 days prior to Commencement of Service Date 1	Director
5,2 – Records Information and Communication Technology	1.4.1	Details of policy and documented procedures to meet the requirements of the Information Acts and the *Scottish Public Sector Procurement and Freedom of Information Guidance* issued in December 2004 by the Scottish Procurement Directorate		Not later than 30 days prior to Commencement of Service Date 1	Director

Schedule, Part and Title	Paragraph	Description	Frequency	Day or Date [and time]	Issue to Recipients Listed
5,2 – Records Information and Communication Technology	1.5.2	Proposed storage facilities for electronic and hard copy Records		Not later than 30 days prior to Commencement of Service Date 1	Director
5,2 – Records Information and Communication Technology	5.2.1	Proposed Information and Communication Technology System Plan		Not later than 30 days prior to Commencement of Service Date 1	Director
5,3 – Reporting and Submission Requirements and Progress Meetings	2.1.1	Annual report	Annually	No later than 31 May following the end of the preceding Annual Period	Director
5,3 – Reporting and Submission Requirements and Progress Meetings	2.1.3	Proposals for the format of the annual report		Not later than 100 Working Days before the end of the first Annual Period	Director
5,4 – Operating Company's Representative, Core Management Team and Key Staff	1.5.3	Nominations for new Operating Company's Representative or Core Management Team or Key Staff and or changes to the Operating Company's organogram	When necessary		Director
5,7 – Operating Company Office and Depots	1.6.1	A report detailing all FETA property available for use under this Contract		No later than 30 days before the end of Mobilisation Period 1	Director

Schedule, Part and Title	Paragraph	Description	Frequency	Day or Date [and time]	Issue to Recipients Listed
5,7 – Operating Company Office and Depots	1.6.2	Report confirming details of all spares available for use under this Contract		No later than 30 days after Commencement of Service Date 2	Director
5,8 – Environmental Sustainability and Waste	2.3.1	Report on feasibility of sourcing at least 10% of the materials required for the Scheme from recycled, secondary or re-used sources	For all Works Contracts with an Estimated Bid Value of >£1,000,000		Director
6,1 – Procurement and Management of Schemes	3.1.1	Nominations for Contract Administrators	No later than 30 days prior to Commencement of Service Date 1		Director
6,1 – Procurement and Management of Schemes	3.1.2	Resubmitted nominations for Contract Administrators	No later than 25 Working Days prior to the start of the second Annual Period and each subsequent Annual Period, or whenever a person consented to is unavailable to undertake the role, and whenever the Director requests the Operating Company to provide further nominations		Director
6,1 – Procurement and Management of Schemes	3.1.4	Names of individuals nominated as Contract Administrator(s) together with the proposed level of supervision and details of other Schemes for which such individuals are responsible		For each Works Contract	Director

Schedule, Part and Title	Paragraph	Description	Frequency	Day or Date [and time]	Issue to Recipients Listed
6,1 – Procurement and Management of Schemes	3.1.5	Recommendations on form of contract to be used from the Director's library of model contracts	Prior to commencing any tender process	In sufficient time prior to commencing any tender process	Director
6,1 – Procurement and Management of Schemes	3.1.17	One Electronic Copy of finalised tender documents and model checklist as per Annex 6.1/A	Prior to the issue of any tender documents and following completion of Design		PAG
6,1 – Procurement and Management of Schemes	3.2.1	A report making recommendations on: (i) suitability of Works for the use of lane rental charges (ii) length of maintenance period (iii) Works Contractor's responsibilities during the maintenance period	Prior to the preparation of each Works Contract		Director
6,1 – Procurement and Management of Schemes	3.2.3	(ii) contract notice (iii) pre-qualification document	When necessary		Director
6,1 – Procurement and Management of Schemes	4.1.2	Copies of Works Contract documents		No later than 25 Working Days prior to the commencement of the Works Contract	Director
6,1 – Procurement and Management of Schemes	5.2.1	Agreed programme and financial forecast for the Works Contract		No later than 10 Working Days prior to commencement of the Works Contract	Director

Schedule, Part and Title	Paragraph	Description	Frequency	Day or Date [and time]	Issue to Recipients Listed
6,1 – Procurement and Management of Schemes	5.2.3	Proposed standard templates for written reporting when the Operating Company acts as Contract Administrator		No later than 30 days prior to Commencement of Service Date 1	Director
6,1 – Procurement and Management of Schemes	5.2.5	Standard forms Certificate of Payment CC1A, CCII and CCIII as shown in Annex 6.1/C	With each payment request or monthly valuation		Director
6,1 – Procurement and Management of Schemes	5.2.5	Form CCIII for each Scheme	Quarterly intervals		Director
6,1 – Procurement and Management of Schemes	5.4.2	Monthly statement and forms CC1A, CCII and CCIII		No later than 10 Working Days from receipt of statement	Director and PAG
6,2 – CDM Regulations 2007	1.1.5	Initial proposals for discharging the role of Client's Representative	During Mobilisation Period 1	At least 60 days prior to Commencement of Service Date 1	Director
6,2 – CDM Regulations 2007	1.2.1	Report summarising checks on the competence of and appropriateness of resources in organisations being considered for appointment as designer(s) or CDM co-coordinator(s)	When required		Director
6,2 – CDM Regulations 2007	1.2.2	Report on suitability of a company for appointment as Principal Contractor	Prior to award of a Works Contract		Director
6,4 – Design and Certification of Operations and Works	2.1.1	Design brief for each Scheme	When required		Director

Schedule, Part and Title	Paragraph	Description	Frequency	Day or Date [and time]	Issue to Recipients Listed
6,4 – Design and Certification of Operations and Works	2.2.4	Land plans and schedules	When required		Director
6,4 – Design and Certification of Operations and Works	2.2.8	Draft Records of Determination	When required		Director
6,4 – Design and Certification of Operations and Works	2.2.12	The required road orders, plans, schedules, environmental impact assessments and environmental statements	For each Scheme where the Design requires new road orders		Director
6,4 – Design and Certification of Operations and Works	3.1.2	Certification to cover the Design or Design Element(s)	Where the Operating Company executes a Design		Director
6,4 – Design and Certification of Operations and Works	3.1.4	A Design proposal on an approval in principle (AIP) form as provided in Annex 6.4/A	At preliminary Design stage		Director
6,4 – Design and Certification of Operations and Works	3.3.1	Factual report referred to in the Design Manual for Roads and Bridges	Forwarded on completion of the Design		Scottish office of the British Geological Survey
6,4 – Design and Certification of Operations and Works	3.3.4	Draft Design brief for ground investigations	Prior to an Order being issued and when requested		Director

Schedule, Part and Title	Paragraph	Description	Frequency	Day or Date [and time]	Issue to Recipients Listed
6,4 – Design and Certification of Operations and Works	3.3.5	Independent check Certificate	Upon receiving sign off from the independent geotechnical checker		Director
7,1 – Management, Inspection and Maintenance	4.14.2	Recommendations on remedial actions	When necessary		Director
7,1 – Management, Inspection and Maintenance	4.28.9	Network operational strategy	No later than 6 months after Commencement of Service Date 1		Director
7,1 – Management, Inspection and Maintenance	4.28.10	Details of amendments required or confirmation that no amendments are required following review of the consented to network operational strategy	Annually	No later than 25 Working Days prior to the due date	Director
7,1 – Management, Inspection and Maintenance	4.28.19	Method statement for electrical testing		No later than 25 Working Days after Commencement of Service Date 1	Director
7,1 – Management, Inspection and Maintenance	4.28.20	Procedural manual for the undertaking of operational reviews and an update to the procedural manual		No later than 25 Working Days after Commencement of Service Date 1 for the procedural manual and not later than 25 Working Days after Commencement of	Director

Schedule, Part and Title	Paragraph	Description	Frequency	Day or Date [and time]	Issue to Recipients Listed
				Service Date 2 for the update	
7,1 – Management, Inspection and Maintenance	4.34.9	A detailed report when a local authority has not carried out its statutory duty in relation to litter and refuse	When necessary	Within 25 Working Days of becoming aware	Director
7,2 – Winter Service	1.2.6	Winter Service Plan for the period between Commencement of Service Date 1 and midnight on 15 May that first follows Commencement of Service Date 1 in the event that Commencement of Service Date 1 falls between 31 August and 15 May		Not later than 30 days prior to the end of Mobilisation Period 1	Director
7,2 – Winter Service	1.2.7	Winter Service Plan for the forthcoming Winter Service Period	Annually	Prior to 31 July	Director
		Updated Winter Service Plan to take account of Network 2		No later than 30 days prior to the end of Mobilisation Period 2	
7,2 – Winter Service	1.2.10	One Electronic Copy of each approved Winter Service Plan	Prior to the commencement of each Winter Service Period		Director, PAG, Emergency Services, adjacent local authorities and their agents and other operating companies

Schedule, Part and Title	Paragraph	Description	Frequency	Day or Date [and time]	Issue to Recipients Listed
7,2 – Winter Service	2.1.2	Proposed Computerised Road Weather Information System		No later than 30 days prior to the end of t Mobilisation Period 1	Director
		Proposed amendments to the Computerised Road Weather Information System to take account of Network 2		No later than 30 days prior to the end of Mobilisation Period 2	
7,2 – Winter Service	2.6.1	Report on known effects of adverse winter weather and travelling conditions	When necessary		Traffic Scotland Operations and Infrastructure Services Contractor
7,2 – Winter Service	2.6.2	Proposed Winter Service Operations	When Winter Service Operations are planned		Organisations listed in paragraph 2.6.1
7,2 – Winter Service	2.11.2	Recommendations in writing regarding snow fences, shelter belts and snow poles	During first Annual Period		Director
7,3 – Incident Response	3.2.2	Draft Disruption Risk Management Plan		No less than 30 days prior to Commencement of Service Date 1	Director
7,3 – Incident Response	3.2.3	Updated Disruption Risk Management Plan	Annually	No later than 10 Working Days prior to the end of each Annual Period	Director
7,3 – Incident Response	4.1.1	Incident Response Plan and an updated Incident Response Plan to take account of Network 2		No less than 30 days prior to Commencement of Service Date 1 and not less than 30 days prior to Commencement of	Director

Schedule, Part and Title	Paragraph	Description	Frequency	Day or Date [and time]	Issue to Recipients Listed
				Service Date 2 for the updated Plan	
7,3 – Incident Response	4.4.2	One Electronic Copy and one controlled paper copy of the current Incident Response Plan	Whenever the Incident Response Plan is updated		Operational Partners
7,3 – Incident Response	4.5.1	(i) Updated Incident Response Plan or (ii) statement declaring the Plan has been reviewed and no update is required	Intervals not exceeding three months		Director
7,3 – Incident Response	4.8.5	(i) notification of an Incident in accordance with Annex 7.3/A	When necessary		Emergency Services, the Traffic Scotland Operator and the Director
7,3 – Incident Response	4.9.2	Rotas of trained operatives		Not later than 30 days prior to Commencement of Service Date 1 and at least 10 Working Days prior to 1 April and 1 October in each subsequent Annual Period and at least 30 days prior to Commencement of Service Date 2	Director and Operational Partners
7,3 – Incident Response	5.3.6	(iii) final documentation	When the Operating Company undertakes a review of any Standard Incident Diversion Route		Director via the Traffic Scotland Operations and Infrastructure Services Contractor

Schedule, Part and Title	Paragraph	Description	Frequency	Day or Date [and time]	Issue to Recipients Listed
			to identify amendments or improvements		
7,3 – Incident Response	6.8.1	Trunk Road Incident Support Service plan as part of the Incident Response Plan		No later than 30 days prior to Commencement of Service Date 1	Director
7,3 – Incident Response	6.8.2	Updated Trunk Road Incident Support Service plan	At intervals not exceeding three months		Director
7,3 – Incident Response	7.5.1	Incident Support Units plan as part of the Incident Response Plan and updates in accordance with the update requirements applicable to the Incident Response Plan		No later than 30 days prior to Commencement of Service Date 1 for the first Plan	Director
7,3 – Incident Response	8.8.1	Vehicle Recovery Service plan as part of the Incident Response plan and updates in accordance with the requirements applicable to the Incident Response Plan		No later than 30 days prior to Commencement of Service Date 1 for the first Plan	Director
7,3 – Incident Response	12.3.2	Detailed report of the fatal incident using Part 1 of the fatal accident notification form in Annex 7.3/D		Within 24 hours of the Incident	Director
7,3 – Incident Response	12.3.3	Detailed report using part 2 of the fatal accident notification form in Annex 7.3/D		Within five Working Days of the Site visit having been carried out	Director
7,4 – Landscape Development Process and Deliverables	1.2.1	Landscape strategy		No later than 50 Working Days before the end of the first Annual Period	Director

Schedule, Part and Title	Paragraph	Description	Frequency	Day or Date [and time]	Issue to Recipients Listed
7,4 – Landscape Development Process and Deliverables	1.2.2	Landscape strategy	Annually	No later than 25 Working Days prior to the end of each of the second Annual Period and each subsequent Annual Period	Director
7,4 – Landscape Development Process and Deliverables	1.3.2	Landscape Development Plan		Not later than 50 Working Days before the end of the first Annual Period	Director
7,4 – Landscape Development Process and Deliverables	1.3.3	Updated Landscape Development Plan	Annually	No later than 25 Working Days before the end of the second and each subsequent Annual Period	Director
7,4 – Landscape Development Process and Deliverables	1.4.5	Report proposing changes to maintenance requirements for Landscape Areas	When identified within the schedule of landscape opportunities		Director
7,4 – Landscape Development Process and Deliverables	1.4.6	Information for each opportunity included within the schedule of landscape opportunities	When included		Director
7,5 – NRSWA 1991	6.1.3	Report recommending changes to associated data held in the Scottish Road Works Register	Quarterly	No later than 60 Working Days after Commencement of Service Date 1 and at quarterly intervals thereafter	Director

Schedule, Part and Title	Paragraph	Description	Frequency	Day or Date [and time]	Issue to Recipients Listed
7,5 – NRSWA 1991	7.1.1	Processes for and anticipated programme of NRSWA inspections/investigations/ coring and testing		Draft programme no later than 15 Working Days prior to Commencement of Service Date 1 and no later than 25 Working Days prior to the end of each Annual Period thereafter. Final programme no later than 15 Working Days after the start of each Annual Period	Director
7,5 – NRSWA 1991	7.1.8	Proposals for a coring programme to assist the national coring programme	Annually		Director
		One Electronic Copy and one paper copy of the results of the coring programme executed by the Operating Company			Local Roads authorities carrying out the national coring programme and the Performance Audit Group
		A final report on each annual programme		No later than 15 Working Days after the end of each Annual Period and	Director

Schedule, Part and Title	Paragraph	Description	Frequency	Day or Date [and time]	Issue to Recipients Listed
				no later than 25 Working Days before the Service End Date.	
7,5 – NRSWA 1991	8.1.1	(iii) recommendations relating to the Undertaker's proposals	When necessary	No later than three Working Days after receipt	Director
7,5 – NRSWA 1991	8.1.1	(v) reporting Undertaker's work when (a) progress is not in accordance with the programme, or (b) work is not being carried out in accordance with the designs and specifications consented to by the Director	When necessary		Director
7,5 – NRSWA 1991	10.1.2	Recommendations on the liaison arrangements required between the Operating Company, other operating companies and agencies of the Scottish Government to deliver the requirements of the *New Roads and Street Works Act 1991*		Not later than 30 days prior to Commencement of Service Date 1	Director
7,5 – NRSWA 1991	10.1.3	(i) common Monitoring Indicators for Undertakers' work (ii) common Performance Indicators for the Operating Company's' own work		Not later than 30 days prior to Commencement of Service Date 1	Director

Schedule, Part and Title	Paragraph	Description	Frequency	Day or Date [and time]	Issue to Recipients Listed
7,6 – Management and Maintenance of Structures	2.3.2	Maintenance schedule itemising the maintenance requirements for each Structure and Access Systems associated with Network 1	Annually	No later than 30 days prior to Commencement of Service Date 1 and annually thereafter	Director
7,6 – Management and Maintenance of Structures	2.3.3	Maintenance schedule itemising the maintenance requirements for each Structure and Access Systems associated with Network 2	Annually	No later than 30 days prior to Commencement of Service Date 2 and annually thereafter	Director
7,6 – Management and Maintenance of Structures	2.3.7	Programme identifying the number of maintenance activities programmed to be carried out each month	Annually	Before commencing maintenance activities identified in the maintenance schedule	Director and PAG
7,6 – Management and Maintenance of Structures	7.3.2	Any identified structural assessment that cannot be completed before the end of the final Annual Period	When necessary		Director
7,6 – Management and Maintenance of Structures	8.2.5	All proposals and changes for the items listed in (i) to (v)			Director
7,6 – Management and Maintenance of Structures	10.1.1	Approval in principle forms and applications for departures from standards using the forms provided in Schedule 6 Part 4	When necessary	Allowing adequate time for consideration by the Director	Director
7,7 – Structures with Particular Requirements	1.1.2	Electronic Copy of all documents (including maintenance manuals) which have been transferred by FETA, the previous operating company or by the Director in relation to Network 1.		Not later than 150 Working Days after Commencement of Service Date 1	Director

Schedule, Part and Title	Paragraph	Description	Frequency	Day or Date [and time]	Issue to Recipients Listed
		Electronic copy of all documents including manuals which have been transferred to the Operating Company by the Director in relation to Network 2		No later than 50 Working Days after Commencement of Service Date 2	
		Details of documents listed in Annex 7.7/B which were not transferred and any other documents required by the Operating Company and details of any deficiencies and discrepancies with proposals for resolving discrepancies.			
7,7 – Structures with Particular Requirements	1.1.4	Electronic Copy of any updated document	Annually	Following the annual review of documents listed in Annex 7.7/B	Director
7,7 – Structures with Particular Requirements	Annex 7.7/A, para 2.2.2	Procedures in the Management System for inspections, operation and maintenance of the Forth Road Bridge		No later than 60 days prior to Commencement of Service Date 1	Director
7,7 – Structures with Particular Requirements	Annex 7.7/A, para 2.2.5	Schedule for the proposed continued execution of two yearly Bridge Specific Live Load Assessment pursuant to *BD 50/92*		A minimum of 30 days prior to Commencement of Service Date 1	Director
7,7 – Structures with Particular Requirements	Annex 7.7/A, para 2.2.6	Any changes to the planned inspection programme and frequencies	Annually	As part of the annual inspection reporting process	Director
7,7 – Structures with Particular Requirements	Annex 7.7/A, para 2.2.7(iv)	Forth Road Bridge Principal Inspection report	Annually	A minimum of 30 days prior to the review of the structures maintenance schedule as defined in Schedule 7 Part 6, the first submission no earlier than 5ive months after	Director

Schedule, Part and Title	Paragraph	Description	Frequency	Day or Date [and time]	Issue to Recipients Listed
				and no later than 11 months after Commencement of Service Date 1	
7,7 – Structures with Particular Requirements	Annex 7.7/A, para 2.2.8	Proposed dates for further intrusive inspections		Not more than 180 days after Commencement of Service Date 1	Director
		Interpretative report	Every six months	From commencement of Service Date 1	
		Anomalies giving cause for concern		Within 30 days of the emergence of such anomaly	
7,7 – Structures with Particular Requirements	Annex 7.7/A, para 2.2.9	Procedures and schedules for the operation, maintenance and inspection of all mechanical, electrical and plumbing equipment		A minimum of 30 days prior to Commencement of Service Date 1	Director
7,7 – Structures with Particular Requirements	Annex 7.7/A, para 2.2.10	Procedures for the inspection, operation and maintenance of all Access Systems		A minimum of 30 days prior to Commencement of Service Date 1	Director
7,7 – Structures with Particular Requirements	Annex 7.7/A, para 2.2.12	Updated spare parts inventory		Not more than 30 days following Commencement of Service Date 1	Director
7,7 – Structures with Particular Requirements	Annex 7.7/A, para 2.2.12	Proposals for the Forth Road Bridge Maintenance Database		No later than 60 days after Operations commencement Date 1	Director

Schedule, Part and Title	Paragraph	Description	Frequency	Day or Date [and time]	Issue to Recipients Listed
7,7 – Structures with Particular Requirements	Annex 7.7/A, para 2.2.14	Scoring system to produce composite indicators for tracking the long term condition of all structural elements on the Forth Road Bridge		No later than six months after Commencement of Service Date 1	Director
		Report providing a summary of the results, changes in the composite indicators over the period, the reasons for these changes and recommendations for addressing any deterioration in condition	Annually		
7,7 – Structures with Particular Requirements	Annex 7.7/A, para 2.2.16	Procedures in the Management System for ensuring the security of the Forth Road Bridge		A minimum of 30 days prior to Commencement of Service Date 1	Director
7,7 – Structures with Particular Requirements	Annex 7.7/A, para 2.3.2	Procedures in the Management System for the inspection, operation and maintenance of the Queensferry Crossing		A minimum of 30 days prior to Commencement of Service Date 2	Director
7,7 – Structures with Particular Requirements	Annex 7.7/A, para 2.3.6	Any changes to the planned inspection programmes and frequencies	Annually	As part of the annual inspection reporting process	Director

Schedule, Part and Title	Paragraph	Description	Frequency	Day or Date [and time]	Issue to Recipients Listed
7,7 – Structures with Particular Requirements	Annex 7.7/A, para 2.3.7(iii)	Principal Inspection report	Annually	A minimum of 30 days prior to the review of the structures maintenance schedule as defined in Schedule 7 Part 6, the first submission no earlier than 5 months and no later than 11 months after Commencement of Service Date 2	Director
7,7 – Structures with Particular Requirements	Annex 7.7/A, para 2.3.8	Procedures for the monitoring, operation and maintenance of the mechanical, electrical and plumbing systems		60 days prior to Commencement of Service Date 2	Director
7,7 – Structures with Particular Requirements	Annex 7.7/A, para 2.3.9	Procedures for the inspection, operation and maintenance of the Access Systems		A minimum of 30 days prior to Commencement of Service Date 2	Director
7,7 – Structures with Particular Requirements	Annex 7.7/A, para 2.3.11	Updated spare parts inventory		Not more than 30 days following Commencement of Service Date 2	Director
7,7 – Structures with Particular Requirements	Annex 7.7/A, para 2.3.12	Proposed design for the electronic Structured Query Language inspection, Defects and repair management database for the Queensferry Crossing		No later than 60 days after Operations Commencement Date 1	

Schedule, Part and Title	Paragraph	Description	Frequency	Day or Date [and time]	Issue to Recipients Listed
		Scoring system for producing composite indicators for tracking the long term condition of structural elements on the Queensferry Crossing		No later than six months after Commencement of Service Date 2	
		Report providing a summary of the results, changes in the composite indicators over the period, the reasons for these changes and recommendations for addressing any deterioration in condition	Annually		
7,7 – Structures with Particular Requirements	Annex 7.7/A, para 2.3.13	Procedures for the monitoring, operation and maintenance of the Structural Health Monitoring System		30 days prior to Commencement of Service Date 2	Director
7,7 – Structures with Particular Requirements	Annex 7.7/A, para 2.3.16	Report of the review of triggering criteria for the Structural Health Monitoring System		Before 30 March following commencement of Service Date 2	Director
7,7 – Structures with Particular Requirements	Annex 7.7/A, para 2.3.17	Procedures for reacting to all structural alerts generated by the Structural Health Monitoring System and for providing reports on structural status		No later than 60 days after Commencement of Service Date 2	Director
7,7 – Structures with Particular Requirements	Annex 7.7/A, para 2.3.19	Format, number and distribution list for Structural Health Monitoring System reports		At least 30 days prior to Commencement of Service Date 2	Director
7,7 – Structures with Particular Requirements	Annex 7.7/A, para 2.3.19 (vi)	Inventory of spare parts provided as part of the Structural Health Monitoring System		Not more than 30 days following Commencement of Service Date 2	Director

Schedule, Part and Title	Paragraph	Description	Frequency	Day or Date [and time]	Issue to Recipients Listed
7,7 – Structures with Particular Requirements	Annex 7.7/A, para 2.3.20	Procedures for the monitoring, operation and maintenance of the Supervisory Control and Data Acquisition System		30 days prior to Commencement of Service Date 2	Director
7,7 – Structures with Particular Requirements	Annex 7.7/A, para 2.3 25	Procedures in the Management System for ensuring the security of the Queensferry Crossing		A minimum of 30 days prior to Commencement of Service Date 2	Director
7,8 – Severe Weather Services	2.2.4	Details of proposed expert weather forecasting service for Severe Weather events		No later than 30 days prior Commencement of Service Date 1	Director
7,8 – Severe Weather Services	3.1.4	Reviewed and updated Severe Weather management plans	As part of undertaking the review and update of the Incident Response Plan required by S7P3		Director
7,8 – Severe Weather Services	3.2.5	Reviewed and updated wind management plans	As part of undertaking the review and update of the Incident Response Plan required by S7P3		Director
7,8 – Severe Weather Services	3.3.2	Wind management plan for the Forth Road Bridge		No later than 60 days prior to Commencement of Service Date 1	Director
		Wind management plan for the Queensferry Crossing		No later than 60 days prior to Commencement of Service Date 2	
7,8 – Severe Weather Services	3.5.4	Proposed revisions to flood management plans	As part of the Incident Response Plan required by S7P3		Director

Schedule, Part and Title	Paragraph	Description	Frequency	Day or Date [and time]	Issue to Recipients Listed
7,8 – Severe Weather Services	3.6.1	Proposed revisions to landslide management plans	As part of the Incident Response Plan required by S7P3		Director
7,8 – Severe Weather Services	4.2.1	Response procedure to inspect parts of the Structures identified in the *Forth Road Bridge Engineering Manual* and the *Queensferry Crossing Inspection and Maintenance Manual* as part of the Severe Weather services plans.		No less than 30 days prior to Commencement of Service Date 1 for the Forth Road Bridge Commencement of Service Date 2 for the Queensferry Crossing	Director
7,8 – Severe Weather Services	4.2.3	Proposed changes to the response procedure	After every event giving rise to its use		Director
8,1 – Abnormal Indivisible Load Routeing	3.2.3	Request for use of specialist tools		No later than 120 days prior to the respective Commencement of Service Date for the Structure in question	Director
8,3 – Road Safety and Accident Investigation and Prevention	3.1.7	A draft one year programme of Schemes based on the findings of the Annual Road Safety Review Report	Annually		Director
8,4 – Signs Requiring Authorisation	1.1.1	Advice and recommendations on signing proposals	When necessary	Within 10 Working Days of receipt of any signing proposals and applications	Director

Schedule, Part and Title	Paragraph	Description	Frequency	Day or Date [and time]	Issue to Recipients Listed
8,4 – Signs Requiring Authorisation	1.2.4	A copy of the signed letter of agreement duly completed by the applicant	When necessary		Director
8,4 – Signs Requiring Authorisation	1.6.4	Assessment and report as per *Signposting of Truckstop Facilities from Motorways and other Trunk Roads – Policy and Guidance* and other associated documentation	When necessary		Director

This is Annex 5.3/B to Schedule 5 Part 3 referred to in the foregoing Agreement between Scottish Ministers and Amey LG Limited.

SCOTTISH MINISTERS' REQUIREMENTS

SCHEDULE 5 PART 3

REPORTING AND SUBMISSION REQUIREMENTS AND PROGRESS MEETINGS

ANNEX 5.3/B – REPORTING AND SUBMISSION INFORMATION TO BE STORED BY THE OPERATING COMPANY

SCOTTISH MINISTERS' REQUIREMENTS

SCHEDULE 5 PART 3

REPORTING AND SUBMISSION REQUIREMENTS AND PROGRESS MEETINGS

ANNEX 5.3/B – REPORTING AND SUBMISSION INFORMATION TO BE STORED BY THE OPERATING COMPANY

Table 5.3.B.1

Schedule, Part and Title	Paragraph	Description	Frequency	Day or Date [and time]	Information is Intended for
1,1 – Contract Scope	4.2.3	Any amendment to the registers required under Clauses 4.2.1 , 4.2.2, 4.2.5 and 10.1.3		Within five Working Days of amendment	Director
1,4 – Indemnities and Insurance	12.4.5	Notice of any amendments and replacements of any of the insurance documents referred to in Clause 12.4 and of other relevant documents		Within seven days of issue whether or not requested by the Scottish Ministers	Scottish Ministers
1,4 – Indemnities and Insurance	12.4.6	Evidence from the insurers that the premiums payable have been paid to the insurers and that the insurances are in full force and effect			Scottish Ministers
1,5 – Management System and Change Proposals	13.1.4	Amendments to Management System and Quality Plan	Periodically as necessary		Scottish Ministers
3,5 – Communications Strategy, Correspondence, Enquiries and Complaints	2.9.2	Communications register summarised reports	Monthly	15th day	Director

Schedule, Part and Title	Paragraph	Description	Frequency	Day or Date [and time]	Information is Intended for
3,5 – Communications Strategy, Correspondence, Enquiries and Complaints	2.9.3	Communications register summarised reports	Annually	15 April each year, covering the preceding Annual Period	Director
3,6 – Customer Contact Services	2.2.3(i)	Reports on usage figures on all pages contained within the Unit-specific website	Monthly		Director
3,7 – Network Operations Services	2.3.5(xv)	Records of all traffic management installations for each day of each annual Period	For each day of each Annual Period	All updates are completed by 09:30 hours on the following Working Day	
3,7 – Network Operations Services	2.6.5	Testing Records		Within 10 Working Days of completion of the Operations or Works Contract	Director
3,9 – Collaboration Requirements	1.5.1	Details of collaborative opportunities identified, pursued, potential benefits, costs, service improvements and efficiency savings delivered	Quarterly		Director
3,11 – Community Benefits	1.1.3	Report to demonstrate compliance with requirements of the Part	Quarterly from Commencement of Service Date 1		Director
4, 1 – Financial and Contract Management	4.3.3	Investigation Records described in the *Guidance Document for Implementing a Skid Resistance Policy for Transport Scotland*	Following completion of Records		Director
4, 1 – Financial and Contract Management	4.3.8	Skid policy progress report in a form to be agreed with the Director	Monthly	By 15th day of each month	Director

Schedule, Part and Title	Paragraph	Description	Frequency	Day or Date [and time]	Information is Intended for
4, 1 – Financial and Contract Management	4.3.9	An annual report which summarises the Operating Company's activities in respect of skid resistance management	Annually	Before 31st August in each Annual Period	Director
4, 1 – Financial and Contract Management	4.19.2	Supporting Certificates (CCII and CCIII)	When necessary		Store in IRIS
4, 1 – Financial and Contract Management	4.21.1	Carbon emissions report	Quarterly and annually		Director
4,2 – Integrated Roads Information System	2.3.1	Network change sheet in Annex 4.2/C	When necessitated by Operations, Works or work by third parties, changes of geometric alignment or characteristics	At least four weeks before the commencement of construction work	Director
4,2 – Integrated Roads Information System	2.3.1	Network error sheet in Annex 4.2/C	Where an error is identified		Director
4,2 – Integrated Roads Information System	2.3.2	Scheme information to enable network referencing system to be updated	During the update process		Director
4,2 – Integrated Roads Information System	3.1.8	Maintenance Scheme data sheets in the form provided in Annex 4.2/A. On occasions when there is a need to adjust a Scheme on Site, an explanation for change form as provided in Annex 4.2/D shall be submitted with the maintenance Scheme date sheet	Where pavement investigations indicate a substantial difference between existing construction layers and those recorded in IRIS	Within 25 Working Days of substantial completion of the related repair, change or Site Investigation	Director

Schedule, Part and Title	Paragraph	Description	Frequency	Day or Date [and time]	Information is Intended for
4,3 – Roadside Electrical Apparatus and Power Supplies	2.4.1	Energy inventory	Monthly	By 21st day of each calendar month or the first Working Day after 21st day of each month	Director
4,3 – Roadside Electrical Apparatus and Power Supplies	3.1.2(vi)	Record in a suitable tabulated form of the distribution network operator supply system type and the measured value of the distribution network operator's external earth fault loop impedance (with the energy inventory)	Monthly	By 21st day of each calendar month or the first Working Day after 21st day of each month	Director
4,4 – Damage to Crown Property and Third Party Claims	1.2.2	Electronic Copy of the register and records relating to third party claims and Damage to Crown Property	When required		Director with the secure remote access to Director and Performance Audit Group
4,4 – Damage to Crown Property and Third Party Claims	3.1.4	Damage to Crown Property Consolidated Report in the format shown in Annex 4.4/D	Quarterly		Director
4,4 – Damage to Crown Property and Third Party Claims	3.6.2	Detailed list of Damage to Crown Property within the Unit that will not be repaired prior to Commencement of Service Date 1		20 Working Days prior to Commencement of Service Date 1	
4,4 – Damage to Crown Property and Third Party Claims	3.6.4	Detailed list of Damage to Crown Property within the Unit that was previously within extent of the network maintained by the Previous Operating Company prior to Commencement of Service Date 1		20 Working Days prior to Commencement of Service Date 1	
5,2 – Records, Information and	2.1.3	Report in the form provided in Annex 5.2/C		Within six months of Commencement of Service Date 1	Director

Schedule, Part and Title	Paragraph	Description	Frequency	Day or Date [and time]	Information is Intended for
Communication Technology					
5,2 – Records, Information and Communication Technology	2.1.4	Report in the form provided in Annex 5.2/C		Within six months of Commencement of Service Date 2	Director
5,2 – Records, Information and Communication Technology	4.1.1	Electronic Copy of the Records Register	Annually	Within five Working Days after the commencement of each Annual Period and of the end of the last Annual Period	Director
5,6 – Performance Measurement	1.1.2	Information required for all Performance Indicators, Monitoring Indicators and Payment Adjustment Factors	No later than five Working Days after the end of the relevant reporting period		Director, copied to PAG
5,7 – Operating Company Office and Depots	1.6.2	Stock take	Annually	No later than 30 days after 31 March	Director
5,7 – Operating Company Offices and Depots	1.6.5	Inventory	When a new item has been provided, when any item has been stolen or damaged and when there has been a reduction in the quantity of items available		Director

Schedule, Part and Title	Paragraph	Description	Frequency	Day or Date [and time]	Information is Intended for
5,8 – Environmental Sustainability and Waste	3.1.1	Report on sustainability aspects of all Operations and Works undertaken during each Annual Period	Annually	No later than 25 Working Days after the start of each Annual Period	Director and PAG
5,8 – Environmental Sustainability and Waste	3.1.3	(i) Report on carbon emissions for material usage in Schemes and for individual Schedule of Rates and Prices items within the one year programme	Quarterly and Annually	The annual report to be included within the annual report required in paragraph 3.1.1	Director
5,8 – Environmental Sustainability and Waste	3.1.4	Report on total carbon emissions using data generated from the Carbon Management System Road Infrastructure Project Tool for each Works Contract		No later than 25 Working Days after completion of each Works Contract	Director
6,1 – Procurement and Management of Schemes	5.2.6	Lane rental monitoring form in Annex 6.1/D	Each lane rental contract	Within 25 Working Days of issuing the Certificate of Completion	Director and PAG
6,1 – Procurement and Management of Schemes	5.5.2	As built Records for Structures		No later than 10 Working Days after completion of the Works	Director
6,1 – Procurement and Management of Schemes	5.5.2	Amended as built Records for Structures	When any work is undertaken following completion of the Works referred to in the Works Contract	No later than 10 Working Days after the work has been executed	Director

Schedule, Part and Title	Paragraph	Description	Frequency	Day or Date [and time]	Information is Intended for
6,3 – Road Safety Audits	3.1.2	Road safety audit report	When necessary	Within five Working Days of the audit being undertaken	Director
6,3 – Road Safety Audits	3.1.4	Exception report	When necessary		Director
6,3 – Road Safety Audits	3.1.5	Audit brief	When necessary		Director
6,3 – Road Safety Audits	3.5.3	Stage 4 road safety audit report	When necessary		Director
6,3 – Road Safety Audits	5.1.1	Road safety audit Certificate		Within five Working Days of the audit being undertaken	Director
6,4 – Design and Certification of Operations and Works	3.1.7	Combined Design and Design Check Certificate as provided in Annex 6.4/A	Where the value of the Scheme or repair of Damage to Crown Property is < £100,000		Recorded and contained within the Design register or Design check register
6,4 – Design and Certification of Operations and Works	3.2.2	Design Certificates and Design Check Certificates	When required		Recorded and contained within the Design register or Design check register Director
6,4 – Design and Certification of Operations and Works	3.2.7	Design Certificates and Design Check Certificates for the Design of each Structure			Recorded and contained within the Design register or

Schedule, Part and Title	Paragraph	Description	Frequency	Day or Date [and time]	Information is Intended for
					Design check register
7,1 – Management, Inspection and Maintenance	4.28.19	In-service report form as detailed in *Local Transport Note 1/98, Appendix B*	At intervals not exceeding five years and on approximately 20 percent of the network in each Annual Period		Attach to relevant inspection record in IRIS
		Method statement on electrical testing	Not later than 25 Working Days after Commencement of Service Date 2		Director
7,1 – Management, Inspection and Maintenance	4.28.23	Performance report	Annually	On completion of annual operational review	Director
7,1 – Management, Inspection and Maintenance	4.29.1	Method statements and maintenance procedures in relation to Detailed Inspection and maintenance of roadside electrical assets, etc and then updated method statements and procedures as required for Network 2		Prior to Commencement of Service Date 1 and then prior to Commencement of Service Date 2 for the update for Network 2	Director
7,1 – Management, Inspection and Maintenance	4.29.5	Periodic inspection and testing certification	Quarterly	At the end of each quarter	Director
7,1 – Management, Inspection and Maintenance	4.37.4	Revised node marker location documents	When necessary		Director

Schedule, Part and Title	Paragraph	Description	Frequency	Day or Date [and time]	Information is Intended for
7,1 – Management, Inspection and Maintenance	4.37.5	Node marker locations for all node markers	During first Annual Period		Director
7,1 – Management, Inspection and Maintenance	4.38.5	Flooding report in accordance with the form shown in Annex 7.1/D	Each occurrence of flooding	Within four days	Attach to relevant inspection record in IRIS
7,2 – Winter Service	1.3.2	Salt stock monitoring reports in accordance with the structure shown in Annex 7.2/L	Monthly	First Working Day during the Winter Service Period	Director
7,2 – Winter Service	1.3.3	Winter Service Report on the Winter Service Plan and Winter Service Operations for the previous Winter Service Period	Annually	No later than 31 May in each Annual Period	Director and PAG
7,2 – Winter Service	1.3.4	Winter Service Report for portion of the Winter Service Period ending 15 May in first Annual Period	First Annual Period	Prior to 31 May in first Annual Period	Director
7,2 – Winter Service	1.3.8	Planned and actual treatments report	Daily during Winter Service Period	Upload by 15:00 hours	Traffic Scotland Service website
7,2 – Winter Service	4.1.7	(ii) details of the Winter Service Plant supplier's calibration method where this is not allowed for under British Standard 1622:1989	September and January of each Annual Period		Director
7,2 – Winter Service	4.1.11	Method used to ensure the quantity of brine applied during each Route treatment is correct	When necessary		Director

Schedule, Part and Title	Paragraph	Description	Frequency	Day or Date [and time]	Information is Intended for
7,2 – Winter Service	Annex 7.2/A, paragraph 8.1.1	Winter Service Plant in accordance with Appendix WSP1 of Annex 7.2/J	As part of the Winter Service Plan required by Annex 7.2/A		Director
7,2 – Winter Service	Annex 7.2/A, paragraph 8.1.2	Winter Service Patrol Report in accordance with Appendix WSP1 to Annex 7.2/J	When necessary		Director
7,2 – Winter Service	Annex 7.2/A paragraph 9.1.2	Details of cycling facilities in urban areas in accordance with Appendix WSP2 to Annex 7.2/J	As part of the Winter Service Plan required by Annex 7.2/A		Director
7,2 – Winter Service	Annex 7.2/A paragraph 10.1.6	Treatment strategy for bridge service roads, footways (including those on bridge decks), footpaths and cycling facilities including location of salt bins where applicable in accordance with Annex 7.2/E	As part of the Winter Service Plan required by Annex 7.2/A		Director
7,2 – Winter Service	Annex 7.2/A paragraph 12.1.2	Details of de-icing materials stocks in accordance with Appendix WSP3 of Annex 7.2/J	As part of the Winter Service Plan required by Annex 7.2/A		Director
7,2 – Winter Service	Annex 7.2/A paragraph 13.1.1	Front line Winter Service Plant and reserve Winter Service Plant in accordance with Appendix WSP4 of Annex 7.2/J	As part of the Winter Service Plan required by Annex 7.2/A		
7,2 – Winter Service	Annex 7.2/A paragraph 13.1.2	Additional Winter Service Plant available through contingency arrangements and arrangements for its mobilisation for Winter Service in accordance with Appendix WSP4 of Annex 7.2/J	As part of the Winter Service Plan required by Annex 7.2/A		

Schedule, Part and Title	Paragraph	Description	Frequency	Day or Date [and time]	Information is Intended for
7,2 – Winter Service	Annex 7.2/A paragraph 13.1.3	Loading winter Service Plant available within the Unit for load front line, reserve and additional Winter Service Plant in accordance with Appendix WSP4 of Annex 7.2/J	As part of the Winter Service Plan required by Annex 7.2/A		
7,3 – Incident Response	3.1.1	(iii) Statements of Intent	In accordance with the *Manual for the Management of the Risk of Unplanned Network Disruption*		Director
7,3 – Incident Response	13.1.2	Annual report reviewing the impact of Incidents on the Unit for the previous Annual Period		No later than 25 Working Days after the commencement of each Annual Period	Director
7,4 – Landscape Development Process and Deliverables	1.5.3	Detailed Designs	Prior to execution		Director
7,4 – Landscape Development Process and Deliverables	1.6.1	Annual landscape management report	Annually	No later than 25 Working Days before the end of each Annual Period	Director
7,4 – Landscape Development Process and Deliverables	1.6.4	Pesticide plan	As part of the annual Landscape management report		Director
7,4 – Landscape Development Process and Deliverables	1.6.5	Injurious species management plan	As part of the annual Landscape		Director

Schedule, Part and Title	Paragraph	Description	Frequency	Day or Date [and time]	Information is Intended for
			management report		
7,4 – Landscape Development Process and Deliverables	1.6.6	Deer management plan	As part of the annual Landscape management report		Director
7,5 – NRSWA 1991	4.1.5	Any paper information from the SRWR		At the Service End Date	Director
7,5 – NRSWA 1991	9.1.1	Details of any existing private apparatus		No later than 30 days prior to Commencement of Service Date 1	
7,5 – NRSWA 1991	10.1.5	Monitoring information and performance assessment reports	Quarterly and annually		Director
7,5 – NRSWA 1991	10.1.6	Report on the performance of the Operating Company against the Scottish Road Works Commissioner's indicators	Annually	Within the timescale stipulated by the Director	Director
7,5 – NRSWA 1991	10.1.8	Report on the performance of Undertakers and the Operating Company against various indicators together with proposed improvements	Annually	No later than 50 Working Days after the end of the each Annual Period	Director
7,5 – NRSWA 1991	10.1.10	Report of the amounts due from each Undertaker during the preceding three month period, together with any necessary information to support the reason for the fees, charges and penalties	Quarterly,	25 Working Days after the end of each quarter. commencing 75 Working Days after the start of the first Annual Period and thereafter throughout until the Service End Date	Director

Schedule, Part and Title	Paragraph	Description	Frequency	Day or Date [and time]	Information is Intended for
7,6 – Management and Maintenance of Structures	2.4.1	Report on annual review of maintenance and operations manuals, maintenance procedures, inspection procedures and health and safety files for Structures	Annually	Within three Working Days of completion of the review	Director
7,6 – Management and Maintenance of Structures	2.4.3	New and amended as built Records		No later than 15 Working Days after completion of any work to new or existing Structures by the Operating Company or by a Works Contractor	Director
7,6 – Management and Maintenance of Structures	2.4.4	Maintenance, inspection and operation procedures for Structures handed over as part of Network 2		No later than 60 days before Commencement of Service Date 2	Director
7,6 – Management and Maintenance of Structures	3.2.2	Report on all random and reactive Structures Safety Inspections	Monthly		Director's bridges manager
7,6 – Management and Maintenance of Structures	3.3.2	Programme which identifies the number of inspections which are programmed to be carried out each month	Annually	Prior to commencing General Inspections each year	Director and PAG
7,6 – Management and Maintenance of Structures	3.4.1	Programme identifying the number of inspections to be carried out each month	Annually	Before commencing Principal Inspections	Director and PAG
7,6 – Management and Maintenance of Structures	5.3.1	Category 1 Defects in expansion joints		Immediately on discovery	Director
7,6 – Management and Maintenance of Structures	5.5.1	Category 1 Defects in parapets and pedestrian protection on Structures		Immediately on discovery	Director

Schedule, Part and Title	Paragraph	Description	Frequency	Day or Date [and time]	Information is Intended for
7,6 – Management and Maintenance of Structures	5.6.1	Category 1 Defects in bearings and bearing shelves		Immediately on discovery	Director
7,6 – Management and Maintenance of Structures	5.8.1	Category 1 Defects in sign and or signal gantries, high mast lighting and other masts		Immediately on discovery	Director
7,6 – Management and Maintenance of Structures	6.1.4	Recommendations for structural maintenance Operations	As part of the annual Bids and programme process in accordance with the requirements of Schedule 4 Part 1		Director
7,6 – Management and Maintenance of Structures	6.4.1	Output from value management prioritisation			Director
7,7 – Structures with Particular Requirements	1.1.5	Inspection report for each Structure		By 31 January in the calendar year following the inspection of each Structure	Director
7,7 – Structures with Particular Requirements	1.1.6	Principal Inspection report	Six yearly intervals	By 30 November of the year in which the Principal Inspection cycle becomes due	Director
7,7 – Structures with Particular Requirements	1.1.7	All inspection reports and related data		Within 10 Working days of their production	Upload to structures management function of IRIS

Schedule, Part and Title	Paragraph	Description	Frequency	Day or Date [and time]	Information is Intended for
7,7 – Structures with Particular Requirements	1.1.8	Summary Defect report for Structures listed in Annex 7.7/A		Within 10 Working Days of its production	Upload to structures management function of IRIS
7,7 – Structures with Particular Requirements	Annex 7.7/A, para 2.3.19 (i)	Annual interpretative report	Annually	No later than 60 days after the end of each Annual Period	Director
7,7 – Structures with Particular Requirements	Annex 7.7/A, para 2.3.19 (ii)	System data reports that summarise the main processed data sets and any monitoring issues identified on subjects for monitoring	Quarterly	A maximum of 30 days after the end of the quarter	Director
7,7 – Structures with Particular Requirements	Annex 7.7/A, para 2.3.19(iii0	Report on each extreme event including weather and loading events where trigger levels are exceeded or other incidents that arise from Structural Health System monitoring		Within 10 days of each event occurring	Director
7,7 – Structures with Particular Requirements	Annex 7.7/A, para 2.3.19(iv)	Report on the failure of an embedded or unreachable component			Director
7,7 – Structures with Particular Requirements	Annex 7.7/A, para 2.3.19(v)	Report on any faults to any sensor, associated cabling or signalling system		Within three days of detection	Director
7,7 – Structures with Particular Requirements	Annex 7.7/A, para 2.3.22	Report of any faults to any part of the Supervisory Control and Data Acquisition System		Within three days of detection	Director
7,8 – Severe Weather Services	3.3.9	Report on traffic behaviour on the Queensferry Crossing and its approaches in conditions of high winds with an updated wind management plan		Not later than 180 days after Commencement of Service Date 2	Director

Schedule, Part and Title	Paragraph	Description	Frequency	Day or Date [and time]	Information is Intended for
8,1 – Abnormal Indivisible Load Routeing	2.3.1	Update of the draft procedure shown in Annex 8.1/C		No later than 120 days prior to Commencement of Service Date 2	Director
8,1 – Abnormal Indivisible Load Routeing	2.3.2	Report on weigh-in-motion checks	Bi-annually	Commencing six months after Commencement of Service Date 2	Director
8,1 – Abnormal Indivisible Load Routeing	2.3.2	Report when a vehicle is overweight by more than ten per cent		No later than five Working Days after the transit	Director
8,2 – Development Management	1.4.2	(vii) planning application inspection report via the development management function of the Integrated Roads Information System	When necessary		Director
8,3 – Road Safety and Accident Investigation and Prevention	2.1.4	Route Safety File updates to include route safety data for Network 2		No later than 30 days prior to Commencement of Service Date 2	
8,3 – Road Safety and Accident Investigation and Prevention	2.1.5	Route Safety File	Annually	15 November	Director
8,3 – Road Safety and Accident Investigation and Prevention	3.1.2	Annual Road Safety Review Report	Annually	By 15 August	Director

SCOTTISH MINISTERS' REQUIREMENTS

SCHEDULE 5 PART 4

OPERATING COMPANY'S REPRESENTATIVE, CORE MANAGEMENT TEAM AND KEY STAFF

CONTENTS **Page No.**

1.	**OPERATING COMPANY'S REPRESENTATIVE, CORE MANAGEMENT TEAM AND KEY STAFF**	**1**
1.1	General	1
1.2	Operating Company's Representative and Core Management Team	1
1.3	Mobilisation Manager	2
1.4	Key Staff	2
1.5	Resource Management Arrangements	2

ANNEX 5.4/A – The Operating Company's Representative, Core Management Team and Key Staff **5**

ANNEX 5.4/B – Role Profiles for the Core Management Team and Key Staff **11**

SCOTTISH MINISTERS' REQUIREMENTS

SCHEDULE 5 PART 4

OPERATING COMPANY'S REPRESENTATIVE, CORE MANAGEMENT TEAM AND KEY STAFF

1. OPERATING COMPANY'S REPRESENTATIVE, CORE MANAGEMENT TEAM AND KEY STAFF

1.1 General

1.1.1 The resources identified in this Part are the minimum requirements and shall not be construed as representing all resources required by the Operating Company to fulfil its obligations under this Contract.

1.1.2 The Operating Company shall ensure that adequate cover is provided for all staff during absences including annual or public holidays and sickness periods.

1.2 Operating Company's Representative and Core Management Team

1.2.1 The Operating Company's Representative and Core Management Team shall be full-time permanent staff employed by and solely for the Operating Company to work on the Unit and shall act independently of other organisations who may have an interest in the Operating Company. The Operating Company's Representative and the Core Management Team shall be located in the Central Office.

1.2.2 The role of the Operating Company's Representative is stated in Schedule 1 Part 1.

1.2.3 The Operating Company's Representative and the Core Management Team shall be the persons named in Table 5.4.1 in Annex 5.4/A of this Part and shall fulfil the requirements of the role profiles listed in Annex 5.4/B of this Part.

1.2.4 The Core Management Team shall assist the Operating Company's Representative in securing the execution of all Operations required by this Contract. The Core Management Team shall undertake the roles relating to:

(i) network management and maintenance,

(ii) Operations management and maintenance,

(iii) Structures management and maintenance,

(iv) Scheme development and delivery,

(v) media and communications management,

(vi) Management System management, and

(vii) business management,

as stated in Annex 5.4/B of this Part.

1.2.5 The Operating Company’s Representative shall not undertake any Professional Services duties.

1.2.6 Members of the Core Management Team may, in addition to their Core Management Team roles, undertake Professional Services duties. Members of the Core Management Team shall not be paid for undertaking Professional Services and the

Operating Company shall not charge Professional Services rates where such utilisation occurs.

1.2.7 The Operating Company shall propose any members of the Core Management Team who it intends to undertake Professional Services duties to the Director for his written consent prior to such members undertaking such duties.

1.3 Mobilisation Manager

1.3.1 The Operating Company shall appoint a Mobilisation Manager to undertake the duties detailed in Schedule 1 Part 2. The Mobilisation Manager shall be a member of either the Core Management Team or Key Staff. The appointment(s) shall be temporary and the appointed person(s) shall be required to resume his Core Management Team or Key Staff role when his duties in relation to Mobilisation Period 1 or Mobilisation Period 2 have been completed to the satisfaction of the Director. For the avoidance of doubt, the Mobilisation Manager is not required to be the same person for Mobilisation Period 1 and Mobilisation Period 2.

1.4 Key Staff

1.4.1 The Operating Company's Key Staff shall be those persons named in Table 5.4.2 in Annex 5.4/A of this Part. The Operating Company’s Key Staff shall fulfil the requirements of the role profiles listed in Annex 5.4/B of this Part.

1.4.2 Key Staff may, in addition to their Key Staff roles, undertake Professional Services duties. Key Staff shall not be paid for undertaking Professional Services and the Operating Company shall not charge Professional Services rates where such utilisation occurs.

1.4.3 The Operating Company shall propose any Key Staff who it intends to undertake Professional Services duties to the Director for his written consent prior to any Key Staff undertaking such duties.

1.4.4 The Journey Time Reliability Coordinator shall be a full-time permanent staff member employed by and solely for the Operating Company to work on the Unit in this dedicated role. The Journey Time Reliability Coordinator shall be located in the Central Office.

1.5 Resource Management Arrangements

1.5.1 The Operating Company's management arrangements and responsibilities shall be as detailed in the organogram in Annex 5.4/A of this Part.

1.5.2 Where the Operating Company intends that a member of the Core Management Team or Key Staff shall undertake more than one Core Management Team or Key Staff role, it shall make such proposals in writing to the Director for his prior consent. No individual shall be nominated to fulfil more than one full time role.

1.5.3 Changes to the Operating Company's Representative, Core Management Team, Key Staff and the organogram shall not be permitted without the prior written consent of the Director. Any proposed changes to the organogram shall contain as a minimum the following details:

(i) the Operating Company's Representative,

(ii) the Core Management Team,

(iii) the Key Staff,

(iv) any professional services staff in accordance with Schedule 9 Part 2,

(v) administrative staff including those responsible for invoicing and payment,

(vi) labour resources, and

(vii) staffing arrangements including reporting lines to the Operating Company's head office.

1.5.4 The Operating Company shall prepare a role profile for any new Core Management Team or new Key Staff role it proposes. Any new role profile prepared by the Operating Company shall be in the format as detailed in Annex 5.4/B of this Part. The Operating Company shall submit any new role profile to the Director for consent.

1.5.5 The Operating Company's proposed changes shall state whether each role identified is full-time or part-time and whether each role is to be undertaken on a full-time or part-time basis by the identified staff.

1.5.6 The Operating Company shall submit details of any proposed change in writing to the Director. Within 10 Working Days of receipt, the Director will:

(i) consent to or object to the proposed new role profile in writing,

(ii) consent to or object to any proposed additional and or substitute appointment in writing, or

(iii) request in writing an interview with any proposed additional appointee and or substitute appointee.

If the Director decides to interview any proposed additional appointee and or proposed substitute, he will consent or object to the proposed appointee and or substitute appointee in writing within 10 Working Days of the interview having taken place.

If the Director objects to a proposed additional appointee and or substitute appointee the Operating Company shall repeat the above process with further candidates until the Director has consented to the proposed additional appointee and or substitute appointee in writing.

1.5.7 The Director may reject any proposed additional appointee and or substitute appointee whose qualifications or experience are, in his opinion, insufficient to give assurance that the proposed additional appointee and or substitute appointee will be able to deliver the key responsibilities of the relevant role.

1.5.8 In addition to the transferring FETA roles, the Core Management Team and Key Staff shall be ready and available to undertake their relevant roles at Commencement of Service Date 1 with the exception of:

(i) the Bridges Manager,

(ii) the Gantry Manager,

(iii) the Health, Safety and Risk Manager,

(iv) the Major Bridge Manager (Forth Road Bridge),

(v) the Media and Communications Manager, and

(vi) the Structural Health Monitoring and Supervisory Control and Data Acquisition Officer

who shall be ready and available to undertake their relevant roles from no later than Commencement of Service Date 2, and

(vii) the Major Bridge Manager (Queensferry Crossing) who shall be ready and available to undertake the relevant role no later than 12 months prior to Commencement of Service Date 2.

Any proposed changes in such personnel shall be made in accordance with paragraph 1.5.3 of this Part.

1.5.9 Notwithstanding that some members of the Core Management Team and or Key Staff are not required to be in place prior to Commencement of Service Date 2, the Operating Company shall ensure that during Service Delivery Period 1, it performs, to the same standard as is required in this Contract, any of the roles and or responsibilities of such members who are not in place and which may be required during Service Delivery Period 1.

1.5.10 Some of the key responsibilities of the Design Manager and the Bridges Manager overlap. Revised role profiles which remove these overlapping responsibilities shall be submitted to the Director for consent 30 days prior to the introduction of a Bridges Manager in accordance with paragraphs 1.5.3 to 1.5.7 of this Part. Once the revised role profiles are consented to by the Director, Annex 5.4/A and Annex 5.4/B shall be amended accordingly.

This is Annex 5.4/A to Schedule 5 Part 4 referred to in the foregoing Agreement between Scottish Ministers and Amey LG Limited.

SCOTTISH MINISTERS' REQUIREMENTS

SCHEDULE 5 PART 4

OPERATING COMPANY'S REPRESENTATIVE, CORE MANAGEMENT TEAM AND KEY STAFF

ANNEX 5.4/A – The Operating Company's Representative, Core Management Team and Key Staff

SCOTTISH MINISTERS' REQUIREMENTS

SCHEDULE 5 PART 4

OPERATING COMPANY'S REPRESENTATIVE, CORE MANAGEMENT TEAM AND KEY STAFF

ANNEX 5.4/A – The Operating Company's Representative, Core Management Team and Key Staff

1. The Operating Company's Core Management Team shall be:

Table 5.4.1 – Operating Company's Core Management Team

COMMERCIALLY SENSITIVE INFORMATION REDACTED

Core Management Team			
POST TITLE	**POST HOLDER**		
	NAME	***Full or Part Time in this role***	***CV Ref.***

2. The Operating Company's Key Staff shall be:

Table 5.4.2 – Operating Company's Key Staff

COMMERCIALLY SENSITIVE INFORMATION REDACTED

Key Staff			
POST TITLE	**POST HOLDER(S)**		
	NAME(S)	***Full or Part Time in this role***	***CV Ref.***

3. The Operating Company's Staff Structure

3.1 Detailed Staff Structure

COMMERCIALLY SENSITIVE INFORMATION REDACTED

3.2 Curricula Vitae for the Operating Company's Representative, the Core Management Team and the Key Staff

COMMERCIALLY SENSITIVE INFORMATION REDACTED

This is Annex 5.4/B to Schedule 5 Part 4 referred to in the foregoing Agreement between Scottish Ministers and Amey LG Limited.

SCOTTISH MINISTERS' REQUIREMENTS

SCHEDULE 5 PART 4

OPERATING COMPANY'S REPRESENTATIVE, CORE MANAGEMENT TEAM AND KEY STAFF

ANNEX 5.4/B – Role Profiles for the Core Management Team and Key Staff

SCOTTISH MINISTERS' REQUIREMENTS

SCHEDULE 5 PART 4

OPERATING COMPANY'S REPRESENTATIVE, CORE MANAGEMENT TEAM AND KEY STAFF

ANNEX 5.4/B – Role Profiles for the Core Management Team and Key Staff

For roles requiring professional qualifications, a non-UK professional qualification awarded by an appropriate engineering institution which in the opinion of the UK Engineering Council is Chartered Engineer equivalent, may be acceptable to the Scottish Ministers at their sole discretion. For non-engineering professional qualifications, evidence of UK equivalence must be provided.

A non-UK academic qualification in an appropriate discipline which is acknowledged by UK academic institutions to be of equivalent standing may also be acceptable to the Scottish Ministers at their sole discretion. Where non-UK qualifications are proposed, evidence of UK equivalence must be provided. Where a degree in an appropriate discipline is specified, either Masters, Honours or Ordinary level is acceptable.

Core Management Team Role Profiles

Role: Operating Company's Representative	Please refer to Schedule 1 Part 1.
Qualifications and Experience	The Operating Company's Representative shall be a professional manager with a strong engineering background gained in a civil engineering or construction related environment. Operating at senior or board level, the Operating Company's Representative shall possess a demonstrable track record in running and controlling all aspects of a successful business. The Operating Company's Representative shall be a Chartered Engineer as awarded by an appropriate UK engineering institution including the Institution of Civil Engineers, the Institution of Structural Engineers, the Institute of Highway Engineers and the Chartered Institution of Highways and Transportation. It is unlikely that anyone with less than 15 years' experience relevant to the position and performance of the role will meet the requirements for this post.
Key Responsibilities	Detailed in Schedule 1 Part 1 as supplemented by other provisions in this Contract.

Role: Bridges Manager	The Bridges Manager is responsible for ensuring the delivery of the management and maintenance of Structures within the Unit.
Qualifications and Experience	Degree in an appropriate engineering discipline and a corporate member of an engineering institution. Chartered Engineer as awarded by an appropriate UK engineering institution including the Institution of Civil Engineers, the Institution of Structural Engineers, the Institute of Highway Engineers or the Chartered Institution of Highways and Transportation. It is unlikely that anyone with less than 15 years' experience relevant to the position and performance of the role will meet the requirements for this post.

Key Responsibilities as supplemented by other provisions in this Contract:

- Support the Operating Company's Representative to ensure delivery of all of the Scottish Minister's Requirements and or the Director's requirements.
- Ensure compliance at all times with the Management Systems in the management and maintenance of the Structures within the Unit.
- Update the structures management function of the Integrated Roads Information System including the structures management system database contained within the Integrated Roads Information System.
- Analyse the data within the pavement management, routine maintenance and management of structures functions of the Integrated Roads Information System.
- Update the Operating Company's maintenance schedule, maintenance and Operations manuals, Health and Safety Files, as-built Records and sub-standard Structures pro formas.
- Review of documents and other items relating to the Operating Company's structural maintenance programme in accordance with the requirements of Schedule 7 Part 6.
- Deliver all the Structures programmes on time and within budget for all Structures inspections, Operations and Schemes whilst meeting the quality requirements of the Management System.
- Prepare and Design all Schemes for Structures undertaken by, or on behalf of, the Operating Company as set out in Schedule 6 Part 4.
- Deliver accurate Estimated Bid Value for Schemes for Structures and deliver Operating Company's proposed programmes with realistic budgets and/or Bids in accordance with the requirements of Schedule 4 Part 1.
- Key point of contact for all dealings with the ICSBOA (as defined in Schedule 3 Part 9) and such other similar organisations as set out in Schedule 3 Part 9.
- Liaise closely with the Major Bridge Manager (Forth Road Bridge), Major Bridge Manager (Queensferry Crossing), Gantry Manager and Design Manager to ensure awareness of all existing and any potential issues.
- Liaise with the Network Manager and Journey Time Reliability Coordinator to ensure traffic disruption caused by Schemes for Structures is minimised.

- Liaise with the Planned Maintenance Manager to ensure any requirements relating to Structures are taken into account when undertaking planned structural maintenance Schemes.
- Liaise with the Operations Manager to ensure any Operations and maintenance requirements are taken into account during planning and delivery of Schemes for Structures.
- Manages and maintains the defects data base. The Bridges Manager may delegate the day to day responsibility but retains overall management of this system.
- Ensure the health, safety and welfare of all staff involved with Schemes for Structures.
- Minimise the environmental impacts of Schemes for Structures.

Role: Business Manager	The Business Manager shall be responsible for the financial and commercial management of the Unit including budget forecasting, budget management, reporting of variances and the provision of timely and accurate invoices in accordance with the self certification procedures. In addition, the Business Manager will be responsible for information and communication technology systems overall, but not for the operations of those systems.
Qualifications and Experience	Degree in Financial or Commercial Management or other relevant business related discipline or an appropriate professional qualification, including CA or ACCA. It is unlikely that anyone with less than 10 years' experience relevant to the provision and performance on the role will meet the requirements for this post.

Key Responsibilities as supplemented by other provisions in this Contract:

- Support the Operating Company's Representative in securing the execution of all of Operations in accordance with this Contract.
- Ensure compliance at all times with the Management System.
- Financial and business planning for the Unit to meet the Director's objectives.
- Operating Company's point of contact for all matters related to budgetary management and control.
- Support the Operating Company's Representative through the provision of robust budget planning and management for all activities undertaken.
- Provide accurate expenditure forecasts to the Director.
- Provide accurate and timely invoices, with supporting substantiation as required, to the Director.
- Ensure prompt payment to sub-contractors.
- Be the key contact within the Operating Company on all issues relating to information and communication technology.

Role: Design Manager	The Design Manager has overall responsibility for the coordination, integration, preparation, checking and approval of Design in relation to roads and Structures (excluding the Principal Crossings) within the Unit. The Design Manager is responsible for appointing staff from within the register of Professional Services to undertake Design duties according to the discipline, competence, experience and qualifications required. The Design Manager has responsibility for inspection of all Structures (excluding the Principal Crossings). The Design Manager will assign individuals undertaking Design duties for Operations, Schemes or Works Contracts on the basis of their competence and experience and not as a general appointment for all Operations, Schemes or Works Contracts delivered under this Contract.
Qualifications and Experience	Degree in appropriate engineering discipline or corporate member of an engineering institution. Chartered Engineer as awarded by an appropriate UK engineering institution including the Institution of Civil Engineers, the Institution of Structural Engineers, the Institute of Highway Engineers and the Chartered Institution of Highways and Transportation. It is unlikely that anyone with less than 15 years' experience relevant to the provision and performance of the role will meet the requirements of the post.

Key Responsibilities as supplemented by other provisions in this Contract:	
(i)	Liaise with the Core Management Team as appropriate.
(ii)	Be the primary contact within the Operating Company for all matters relating to Design (excluding the Principal Crossings).
(iii)	Ensure that the Design Certificates required in accordance with Schedule 6 Part 4 are signed by an appropriately competent, qualified and experienced member of the Professional Services staff.
(iv)	Ensure that Operations for which the Operating Company has undertaken or procured the Design have been designed, constructed and completed in accordance with this Contract.
(v)	Ensure Professional Services staff liaise with the CDM co-ordinator regarding ongoing Designs on all notifiable projects in addition to checking that the client under the CDM Regulations is aware of its duties.
(vi)	Ensure Professional Services staff attend Design meetings arranged by the Director as and when required and liaise with other Professional Services staff undertaking Design duties and Checkers as appropriate during the Design phase of any Operations.
(vii)	Ensure that the Operating Company site operations in relation to Design are supervised by an appropriate member of the Professional Services staff.

(viii)	Review, update and maintain maintenance and operations manuals, Health and Safety Files and other documentation relating to Structures (excluding the Principal Crossings).
(ix)	Ensure compliance at all times with the Management System.
(x)	Liaise with stakeholders and others as appropriate when undertaking maintenance and inspection testing of Structures owned by third parties with maintenance agreements in place.
(xi)	Ensure the health, safety and welfare of all staff involved with Structures (excluding the Principal Crossings).
(xii)	Minimise the environmental impact of Operations relating to Structures (excluding the Principal Crossings).
(xiii)	Compile inspection reports and test Certificates relating to Structures (excluding the Principal Crossings) and deliver these annually to the Director.
(xiv)	Update the Director's Management System including the structures management system database in the Integrated Roads Information System as required.
(xv)	Liaise with the Operations Manager and others to ensure any Operations and maintenance requirements are taken into account during planning and delivery of Operations which may affect Structures (excluding the Principal Crossings).
(xvi)	Timely production of recommendations for, and execution of, critical repair schemes.
(xvii)	Undertakes the responsibility for a Design (excluding the Principal Crossings) carried out wholly or any part of the Design itself by the Operating Company and for any whole or partial Design the Operating Company has procured on its behalf.

Role: Management System Manager	The Management System Manager is responsible for the effectiveness of all elements of the Management System including the Quality Plan.
Qualifications and Experience	Degree in an engineering or science discipline or hold an appropriate professional qualification, including Chartered Engineer, corporate member or chartered member of the Institute of Quality Assurance. It is unlikely that anyone with less than 10 years' experience relevant to the provision and performance of the role will meet the requirements of this post.

Key Responsibilities as supplemented by provisions in this Contract:

- Ensure accreditation of the Management System within one year of Commencement of Service Date 1 to the standard specified in Schedule 5 Part 1.
- Ensure correction of Non-Conformances, prevent the continuance of Non-Conformances and investigate the root causes of Non-Conformances.
- Act upon reports from the Director or the Performance Audit Group on the Operating Company's performance and initiate all necessary actions, including procedural changes, required to prevent the recurrence of any Non-Conformances.
- Integrate corrective and other actions into the Management System including the Quality Plan and into the Operating Company's documented control management and working procedures, including method statements.
- Plan and undertake of internal audits.
- Attend meetings with and report to the Director on the effectiveness of the Management System.
- Report on the effectiveness of the Management System in the Operating Company's monthly and annual reports.
- Day to day responsibility for all matters related to the Management System

Role: Network Manager	The Network Manager is responsible for the management of all activities undertaken or occurring on or near the Trunk Road network within the Unit and supporting Transport Scotland in delivery of its *corporate plan priority of "Better journey times*, better reliability" and the safety of its customers.
Qualifications and Experience	Degree in an appropriate engineering discipline or corporate membership of an appropriate engineering institution including the Institution of Civil Engineers, the Institution of Structural Engineers, the Institute of Highway Engineers and the Chartered Institution of Highways and Transportation. It is unlikely that anyone with less than seven years' experience relevant to the provision and performance of the role will meet the requirements of this post.

Key Responsibilities as supplemented by other provisions in this Contract:

- Support the Operating Company's Representative in securing execution of all Operations required by this Contract including as a minimum duties and responsibilities under Legislation.
- Ensure all activities undertaken on the Trunk Roads within the Unit comply at all times with the Management System.
- Ensure the resilience of the Trunk Road network within the Unit until the Service End Date.
- Support the Operating Company’s Representative in acting as Home Traffic Authority as defined in Transport Scotland’s *Trunk Road and Motorway Tourist Signposting Policy and Guidance* and in undertaking the relevant duties as detailed in Schedule 8 Part 4.
- Authorise temporary traffic signs to any Special Event in accordance with the requirements detailed in Schedule 8 Part 4.
- Manage overall the delivery of the Incident Response Operations within the Unit including management of the activities of the Incident Liaison Officers and the Journey Time Reliability Coordinator.
- Manage and use of information and communications technology within the Unit to support the provision of information to Transport Scotland's customers.
- Liaise and coordinate with the Core Management Team during the planning phases of all activities to minimise their impacts on Transport Scotland's customers.
- Ensure adequate liaison and coordination with all Operational Partners on all matters relating to planned works to be undertaken on or near to the Trunk Road network within the Unit.
- Appointing appropriate support personnel to assist in delivery of Incident Response Operations and the planning and implementation of roadworks.
- Ensuring appropriate support is provided by the Core Management Team to the Journey Time Reliability Coordinator to ensure 24 hours a day, seven days a week coverage of the Journey Time Reliability Coordinator role.

- Liaising with the Media & Communications Manager on:
  - (i) press or ministerial communications relating to activities that affect road users including major roadworks, Incidents and Severe Weather , and
  - (ii) any activities that may lead to adverse publicity or adverse consequences for Transport Scotland's customers.
- Managing the recovery of costs in relation to Damage to Crown Property.
- Duty to report on the results of monitoring the predicted traffic delays.

Role: Media and Communications Manager	The Media and Communications Manager shall be the main point of contact for all stakeholder communications, acting as the spokesperson for the Operating Company, manager of all media and community relationships and preparation of news releases.
Qualifications and Experience	Degree in an appropriate discipline or corporate membership of an appropriate public relations institution such as the Chartered Institute of Public Relations. It is unlikely that anyone with less ten years' experience relevant to the provision and performance of the role will meet the requirements of the post.
Key Tasks: in accordance with the requirements of Schedule 3 Part 5 as supplemented by other provisions of this Contract:	
Key Responsibilities: • Develop, manage, review and update the Operating Company's annual Unit-specific communications plan until the Service End date. • Manage media enquiries in accordance with the media enquiries procedure. • Ensure Press Transport Scotland is given opportunity to comment on all proposed media statements prior to their release. • Initiate communications which present the Operating Company and Transport Scotland in a positive manner to the media, customers and stakeholders. • Prepare and issue factual media releases for public information, notifying the local, regional and national media as appropriate of forthcoming roadworks and expected commencement dates, rescheduling of Core Operations, Operations, Schemes or Works Contracts and expected completion dates and any relevant diversionary routes. • Attend quarterly review meetings with Press Transport Scotland and the Director. • Attend biannual review meetings with Press Transport Scotland, and other operating companies' media and communications officers and managers and the Director.	

Key Staff Role Profiles

Role: Abnormal Load Routeing Manager	The Abnormal Load Routeing Manager is responsible for managing all aspects of any requirements relating to the movement of abnormal indivisible loads and abnormal vehicles within the Unit and shall act as the main contact for all communication and correspondence relating to the routeing and movement of abnormal loads within the Unit.
Qualifications and Experience	Chartered member of the Institution of Civil Engineers, the Institution of Structural Engineers, the Institute of Highway Engineers or the Chartered Institution of Highways and Transportation. It is unlikely that anyone with less than 10 years' experience relevant to the provision and performance of the role will meet the requirements of the post.

Key Tasks: in accordance with the requirements of Schedule 8 Part 1 as supplemented by other provisions of this Contract:

(i)	Respond directly to particular correspondence and enquiries from Undertakers, stakeholders and users of the Trunk Road network seeking advice on the movement of abnormal indivisible loads and abnormal vehicles within the Unit (taking into account the absence of waiting bays for QC which must be identified and may be off-Unit).
(ii)	Provide a routeing and coordination service for hauliers and industry for proposed movements of abnormal indivisible loads and abnormal vehicles within the geographical area of the Unit.
(iii)	Undertake route assessments using the structures management function of the Integrated Roads Information System. To identify Structures that may be affected by the proposed movement of abnormal indivisible loads and, where necessary, advise on alternative routes.
(iv)	Liaise with the Major Bridges Manager (Forth Road Bridge) and or the Major Bridges Manager (Queensferry Crossing), whichever is appropriate, the Bridges Manager, the Operations Manager and the Journey Time Reliability Coordinator to ensure all aspects of any requirements relating to planned maintenance activities are identified and taken into account in route selection.
(v)	Liaise with relevant Operational Partners and other concerned organisations in order to advise on or identify a suitable route for the movement of abnormal indivisible loads and abnormal vehicles.
(vi)	Make recommendations to the Director in a timely manner regarding all proposed and agreed movements within the Unit that require authorisation and advise the Director of any Incidents resulting from such movements.
(vii)	Develop, implement and maintain documented procedures for the effective management of abnormal indivisible load routeing within the Management System, including the Quality Plan.
(viii)	Supervise and coordinate all duties to be undertaken by the Operating Company in relation to abnormal loads.
(ix)	To assess or coordinate assessments necessary for evaluating the Principal Crossings' ability to safely sustain the loads from abnormal indivisible loads and to

	ensure that unacceptable combinations of abnormal indivisible loads (such as convoys) do not cause overload of a Structure or crossing part.

Role: Construction (Design & Management) Coordinator (CDM Coordinator)	The CDM Coordinator appointed for each Scheme will be required to comply with the general duties of a CDM Coordinator as set out in the CDM Regulations. Note: There will be a general requirement that individuals nominated as lead contact for the function of CDM Coordinator will be assigned to Schemes on the basis of their competence and experience and not as a general appointment for all Schemes under this Contract.
Qualifications and Experience	Chartered member of the Institution of Civil Engineers, the Institution of Structural Engineers, the Institute of Highway Engineers or the Chartered Institution of Highways and Transportation. • Demonstrable knowledge of health and safety in construction issues and Legislation. • Experience of significant work on similar schemes with comparable hazards and complexity, relevant to the Scheme to be undertaken. • Registered Member of the Association of Project Safety (RMaPSM) or membership of the Institution of Construction Safety (M Inst CS or F Inst CS) • It is unlikely that anyone with less than 10 years' experience relevant to the provision and performance of the role will meet the requirements of the post.
Key Tasks: In accordance with the requirements of Schedule 6 Part 2 as supplemented by other provisions in this Contract and the CDM Regulations:	
(i)	Report regularly to the Client (or Client's Representative where appointed) on the activities being undertaken and the progress of the Scheme being undertaken.
(ii)	Arrange for the Scheme to be notified to the enforcing authorities as required by Regulation 21.
(iii)	Advise and assist the client or Client's Representative on undertaking measures needed to comply with the CDM Regulations including in particular the duty to ensure competent designers and contractors outwith the Operating Company are or will be appointed and to ensure that adequate arrangements are in place for managing the Scheme.
(iv)	Ensure that suitable arrangements are made and implemented for the coordination of health and safety measures during planning and preparation for the construction phase of Schemes, including facilitating: • cooperation and coordination between persons concerned in the Scheme in pursuance of Regulations 5 and 6 of the CDM Regulations, • the application of the general principles of prevention in pursuance of Regulation 7 of the CDM Regulations.

(v)	Liaise with the principal contractor and client regarding: • the contents of the health and safety file, • the information which the principal contractor needs to prepare the construction phase Plan, and • any design development which may affect planning and management of the construction work.
(vi)	Identify and collect the pre-construction information and provide it to every person designing the Structure and every contractor appointed by the client (including the principal contractor).
(vii)	Take all reasonable steps to ensure that designers comply with their duties under Regulations 11 and 18 of the CDM Regulations.
(viii)	Take all reasonable steps to ensure cooperation between designers and the principal contractor during the construction phase in relation to any Design or change to a Design.
(ix)	Prepare, review and update the health and safety files including the information provided in pursuance of Regulations 17(1), 18(2) and 22(1) (j) of the CDM Regulations and pass the health and safety files to the client or Client's Representative at the end of the construction phase.
(x)	Ensure Professional Services staff liaise with the Design Manager regarding ongoing Designs on all notifiable projects in addition to checking that the client under the CDM Regulations is aware of its duties.

Role: Correspondence Officer	The Correspondence Officer is the main contact within the Operating Company for all correspondence, enquiries and complaints relating to the Unit.
Qualifications	Drafting skills, experience of writing correspondence for public consumption, an appreciation of plain English, the ability to understand the audience for whom the reply is intended and the ability to draft correspondence on behalf the Operating Company, the Director, Transport Scotland and the Scottish Ministers. It is unlikely that anyone with less than two years' experience relevant to the provision and performance of the role will meet the requirements of the post.

Key Tasks: In accordance with the requirements of Schedule 3 Part 5 as supplemented by other provisions in this Contract:

(i)	Provide draft responses and briefing material to the Director to general, Transport Scotland Chief Executive and Ministerial correspondence in respect of any matter requiring input relevant to the Operating Company or this Contract.
(ii)	Provide briefing notes and draft responses related to the topics raised in written or oral Parliamentary questions from Members of the Scottish Parliament, Members of the United Kingdom Parliament and or Members of the European Parliament to allow the Director to develop a suitable response for the Minister to issue.
(iii)	Provide information and relevant data to the Director to allow the development of a response by either the Director or the Scottish Minister to requests received under the Information Acts.
(iv)	Respond directly to particular correspondence, enquiries and complaints received from any source as detailed in Schedule 3 Part 5.
(v)	Maintain an electronic register of all communications it receives and the replies thereto relating to the Unit or to this Contract.

Role: Gantry Manager	The Gantry Manager has overall responsibility for the supervision of use and inspections, testing, maintenance and operation of Access Systems within the Unit, in addition to ensuring their compliance with current regulations and standards.
Qualifications and Experience	Chartered Structural or Civil Engineer. It is unlikely that anyone with less than five years' experience relevant to the provision and performance of the role will meet the requirements of the post. Details of any relevant qualifications and/or professional institution membership and any other specific qualifications such as the Institution of Civil Engineers are required.

Key Tasks: In accordance with the requirements of Schedule 7 Part 6 as supplemented by other provisions in this Contract:

(i)	Control gantry operations.
(ii)	Ensure that operations and maintenance manuals are reviewed at regular intervals and kept up to date.
(iii)	Ensure that the Design, installation and required certification for any temporary Access System is in place prior to use and that elements supporting such Access Systems have been assessed and certified.
(iv)	Ensure Access Systems comply with current standards.
(v)	Fulfil the requirements under the CDM Regulations with respect to Access Systems including direct liaison with the CDM co-ordinator to ensure construction phase plans for Access Systems are prepared.
(vi)	Maintain the Health and Safety File and all documents and Certificates therein relating to Access Systems.
(vii)	Ensure management and emergency procedures in relation to Access Systems are in place and kept up to date.
(viii)	Responsible for managing crane and gantry operating schemes.

Role: Health, Safety and Risk Manager	The Health, Safety and Risk Manager is responsible for providing specialist Health, Safety, Corporate Risk and Environmental knowledge to allow the Operating Company to fulfil its legal obligations.
Qualifications	A chartered Safety Practitioner with a degree level qualification and chartered membership of the Institute of Occupational Safety and Health Formal Construction / Civil Engineering related base qualification is desirable. Accredited training qualification desirable It is unlikely that anyone with less than five years' experience relevant to the provision and performance of the role will meet the requirements of the post.

Key Tasks: as supplemented by provisions in this Contract:	
(i)	Responsible for pro-actively and independently managing all aspects of health & safety arrangements and developing best-practice policies, procedures and processes.
(ii)	Devise and provide advice on systems and procedures to ensure that all works are carried out in accordance with current safety legislation.
(iii)	Responsible, on behalf of the Operating Company's Representative, for ensuring the organisation is appropriately equipped to meet and deliver against its risk management framework.
(iv)	Responsible for co-ordination, development/enhancement and monitoring/reporting of all corporate governance arrangements e.g. risk management systems, risk register, business continuity & incident management etc.
(v)	Oversee CDM arrangements for all notifiable capital works, liaising with designers, consultants and contractors and the Construction (Design & Management) Coordinator as necessary.
(vi)	Carry out inspection, testing and monitoring of working conditions, equipment and substances to ensure compliance with current legislation. Liaise with relevant specialists as necessary.
(vii)	In conjunction with the Management System Manager, responsible for ensuring the Operating Company attains and maintains OHSAS 18001 accreditation.

Role: Incident Liaison Officers	The Incident Liaison Officers support the Network Manager in the delivery of the Incident Response Operations and are responsible for providing an effective response appropriate to each Incident occurring on or near the Trunk Road network on a 24 hours a day, seven days a week basis.
Qualifications and Experience	It is unlikely that anyone with less than five years' experience relevant to the provision and performance of the role will meet the requirements of the post.
Key Tasks: in accordance with the requirements of Schedule 7 Part 3 as supplemented by other provisions in the Contract:	
(i)	Be the first point of contact within the Operating Company for all Incidents occurring on or near the Unit during and outwith Normal Working Hours.
(ii)	Manage the delivery of the Trunk Road Incident Support Service and Incident Support Unit's requirements.
(iii)	Ensure mobilisation of Incident Response Resources.
(iv)	Ensure Standard Incident Diversion Routes are kept updated at all times and activate Standard Incident Diversion Routes in response to Incidents.
(v)	Implement contact arrangements with Operational Partners during the occurrence of an Incident and ensure prompt notification of Incidents to Operational Partners.
(vi)	Coordinate activities relating to the planning, response and mitigation of Incidents.
(vii)	Utilise appropriate support personnel to assist in delivering Incident Response Operations.
(viii)	Record and manage all relevant information relating to Incidents.
(ix)	Provide Incident reports to the Network Manager.
(x)	Co-ordinate Incident Response Operations relating to Severe Weather.

Role: Journey Time Reliability Coordinator	The Journey Time Reliability Coordinator support the Network Manager by undertaking the delivery of the liaison, coordination and management service necessary to minimise the impact of roadworks or events occurring on or near the Trunk Road network within the Unit to minimise delays and congestion to Transport Scotland customers. This full-time role shall be supported by the Core Management Team and Operations Manager to ensure it is delivered on a 24 hours a day, seven days a week basis.
Qualifications and Experience	It is unlikely that anyone with less than five years' experience relevant to the provision and performance of the role will meet the requirements of the post.

Key Tasks: in accordance with the requirements of Schedule 3 Part 7 as supplemented by other provisions of this Contract:

(i)	Be the first point of contact within the Operating Company for all roadworks undertaken by the Operating Company and events occurring on or near the Unit within and outwith Normal Working Hours.
(ii)	Liaise and communicate with relevant Operational Partners and disseminate accurate and timely information to assist in the effective delivery and coordination of roadworks and events throughout the Trunk Road network.
(iii)	Coordinate, monitor and control all roadworks or events to minimise road closures, potential impacts and conflicts and maximise the capacity of the Trunk Road network, using the Automated Diary Facility and SRWR where necessary and undertaking periodic site visits to assess the implementation and impact of roadworks and events.
(iv)	Own and manage the Automated Diary Facility.
(v)	Implement escalation procedures for roadworks and events which exceed allowable delay thresholds.
(vi)	Evaluate the impact of roadworks or events to identify improvements for future roadworks and events with similar impacts.
(vii)	Liaise with the Incident Liaison Officers and relevant Operational Partners in dealing with Incidents occurring during roadworks; such liaison including coordination of the activation and implementation of Standard Incident Diversion Routes.
(viii)	Support the Network Manager in delivering the Operating Company's duties and responsibilities in relation to Legislation.
(ix)	Utilise and manage support personnel on specific tasks relating to the planning and implementation of roadworks or Special Events including coordinating, mobilising, deploying and supervising traffic management arrangements and evaluating their impact.
(x)	Provide reports on the impact of the Operating Company's activities on the journey time reliability of the Trunk Road network with recommendations for proposed improvements.

Role: Landscape Architect	The Landscape Architect is the main point of contact within the Operating Company for landscape management and landscape Design and landscape Design issues and management issues relating to St Margaret's Marsh.
Qualifications and Experience	Chartered Member of the Landscape Institute. It is unlikely that anyone with less than 10 years' experience relevant to the provision and performance of the role will meet the requirements of the post. Knowledge and experience of saltmarsh ecology and management.

Key Tasks: in accordance with the requirements of Schedule 7 Part 4 as supplemented by other provisions of this Contract:

(i)	Prepare and deliver the landscape strategy, the Landscape Development Plan and the annual landscape management report.
(ii)	Undertake landscape opportunity inspections and prepare the schedule of landscape opportunities including the Design of landscape proposals.
(iii)	Attend all landscape and environmental progress meetings arranged with the Director including St Margaret's Marsh SSSI steering group meetings.
(v)	Attend necessary meetings concerning landscape issues related to the Unit.
(vi)	Identify general condition of the grassed and vegetation areas within the Unit and prepare the grassland report and landscape management report.

Role: Major Bridge Manager – (Forth Road Bridge)	The Major Bridge Manager (Forth Road Bridge) has overall responsibility for the inspection, testing, monitoring, management and maintenance of the Forth Road Bridge and reports to the Bridges Manager.
Qualifications and Experience	Degree in an appropriate engineering discipline. Chartered membership of the Institution of Civil Engineers or the Institution of Structural Engineers. It is unlikely that anyone with less than 10 years' experience relevant to the provision and performance of the role will meet the requirements of the post.

Key Tasks: In accordance with the requirements of Schedule 7 Part 7 as supplemented by other provisions in this Contract:

(i)	Review, update and maintain maintenance and operations manuals, Health and Safety Files and other documentation relating to the Forth Road Bridge.
(ii)	Ensure compliance at all times with the Management System.
(iii)	Liaise with stakeholders and others as appropriate when undertaking maintenance and inspection testing of Structures owned by third parties with maintenance agreements in place.
(iv)	Ensure the health, safety and welfare of all staff involved with the Forth Road Bridge.
(v)	Minimise the environmental impact of Operations relating to the Forth Road Bridge.
(vi)	Compile inspection reports and test Certificates relating to the Forth Road Bridge and deliver these annually to the Director.
(vii)	Update the Director's Management System including the structures management system database in the Integrated Roads Information System as required.
(viii)	Liaise with the Operations Manager and others to ensure any Operations and maintenance requirements are taken into account during planning and delivery of Operations which may affect the Forth Road Bridge.
(ix)	Timely production of recommendations for, and execution of, critical repair schemes.

Role: Major Bridge Manager – (Queensferry Crossing)	The Major Bridge Manager has overall responsibility for the inspections, testing, monitoring, management and maintenance of the Queensferry Crossing and reports to the Bridges Manager.
Qualifications and Experience	Degree in an appropriate engineering discipline. Chartered membership of the Institution of Civil Engineers or the Institution of Structural Engineers. It is unlikely that anyone with less than 10 years' experience relevant to the provision and performance of the role will meet the requirements of the post.

Key Tasks: In accordance with the requirements of Schedule 7 Part 7:	
(i)	Review, update and maintain maintenance and operations manuals, Health and Safety Files and other documentation relating to the Queensferry Crossing.
(ii)	Ensure compliance at all times with the Operating Company's Management System.
(iii)	Liaise with stakeholders and others as appropriate when undertaking maintenance and inspection testing of Structures owned by third parties with maintenance agreements in place.
(iv)	Ensure the health, safety and welfare of all staff involved with the Queensferry Crossing.
(v)	Minimise the environmental impact of Operations relating to the Queensferry Crossing.
(vi)	Compile inspection reports and test Certificates relating to the Queensferry Crossing and deliver these annually to the Director.
(vii)	Update the Director's Management Systems including the Structures Management System database as required.
(viii)	Liaise with the Operations Manager and others to ensure any network Operations and maintenance requirements are taken into account during planning and delivery of other Operations which may affect the Queensferry Crossing.
(ix)	Timely production of recommendations for, and execution of, critical repair schemes.

Role: Operations Manager	The Operations Manager shall be responsible for all day to day operational activities within the Unit covering maintenance and Winter Service.
Qualifications and Experience	It is unlikely that anyone with less than seven years' experience relevant to the provision and performance of the role will meet the requirements for this post.
Key Tasks: In accordance with the requirements of Schedule 7 Part 1 as supplemented by other provisions in this Contract:	
(i)	.Support the Operating Company's Representative in securing the execution of all Operations in accordance with the requirements of this Contract.
(ii)	Ensure compliance at all times with the Management System.
(iii)	Ensure the successful delivery of maintenance and Winter Service requirements on the Trunk Road network throughout the Unit.
(iv)	Ensure the continual updating of accurate network inventory data in the Director's Management System.
(v)	Identify potential Schemes within the Unit.
(vi)	Liaise with Core Management Team and other Key Staff members to ensure all maintenance and Winter Service activities are undertaken to minimise the effects of congestion to road users and where suitable, coordinate works to enable maintenance activities to be undertaken within the boundaries of a Scheme to reduce the number of traffic management interventions on the Trunk Road network within the Unit.
(vii)	Ensure the health, safety and welfare of all staff involved with Operations.
(viii)	Minimise the environmental impacts of Operations.
(ix)	Provide support to the Journey Time Reliability Coordinator to ensure that role is delivered on a 24 hours a day, seven days a week basis.

Role: Planned Maintenance Manager	The Planned Maintenance Manager shall be responsible for the planning, design and execution of all planned maintenance Schemes (excluding Structures) within the Unit.
Qualifications and Experience	Degree in an appropriate engineering discipline or corporate membership of appropriate engineering institution including the Institution of Civil Engineers, the Institution of Structural Engineers, the Institute of Highway Engineers and the Chartered Institution of Highways and Transportation. It is unlikely that anyone with less seven years' experience relevant to the provision and performance of the role will meet the requirements of the post.

Key Tasks: In accordance with the requirements of Schedule 6 Part 1 as supplemented by other provisions in this Contract

(i)	Support the Operating Company's Representative in securing the execution of all Operations in accordance with the requirements of this Contract.
(ii)	Ensure compliance at all times with the Management System.
(iii)	Deliver the programme and budget preparation process for all Schemes in accordance with this Contract.
(iv)	Design all planned maintenance Schemes undertaken by, or on behalf of, the Operating Company.
(v)	Ensure the delivery to time and budget of all planned maintenance Schemes whilst meeting the quality requirements.
(vi)	Liaise with the Operating Company’s network management personnel to ensure each planned maintenance Scheme minimises the effects of congestion to road users.
(vii)	Liaise with the Major Bridge Manager (Forth Road Bridge), the Major Bridge Manager (Queensferry Crossing) and the Gantry Manager whichever is appropriate, and the Design Manager to ensure all requirements of this Contract relating to Structures are adhered to as part of each planned maintenance Scheme.
(viii)	Liaise with the Operations Manager and Journey Time Reliability Coordinator to ensure all requirements of this Contract relating to maintenance and Winter Service, including access to the site, are taken into account during the planning and delivery of each planned maintenance Scheme.
(ix)	Analyse the data within the pavement management, routine maintenance and management and structures management functions of the Integrated Roads Information System as part of preparation and maintenance of the annual, three year and 10 year rolling programme.
(x)	Ensure the health, safety and welfare of all staff involved with planned maintenance Schemes.
(xi)	Minimise the environmental impacts of planned maintenance Schemes.
(xii)	Ensure duties referred to in Schedule 3 Part 7 with respect to Traffic Scotland Equipment are undertaken.

Role: Planning Application Officer	The Planning Application Officer is the Operating Company's main point of contact for all matters relating to planning applications and management of the development management function of the Integrated Roads Information System.
Qualifications and Experience	It is unlikely that anyone with less than five years' experience relevant to the provision and performance of the role will meet the requirements of the post. The Planning Application Officer will also be required to attend any training organised by Transport Scotland or the Performance Audit Group in relation to the development management function of the Integrated Roads Information System.

Key Tasks: In accordance with the requirements of Schedule 8 Part 2 as supplemented by other provisions in this Contract:

(i)	Liaise with developers and Transport Scotland in relation to all planning applications and provide advice on the suitability of applications to the Director.
(ii)	Use and comply with the development management function of the Integrated Roads Information System throughout the Contract Period.
(iii)	Assist with applications requiring transport appraisal/assessment, local development plans and any appeal process.
(iv)	Subject to an Order, assist the Director with preparation and administration of minutes or letters of agreement.

Role: Road Safety Manager	The Road Safety Manager is the Operating Company's point of contact for all matters relating to road safety and will be responsible for the management of all road safety and accident investigation and prevention matters including road safety audits.
Qualifications and Experience	It is unlikely that anyone with less than 10 years' experience relevant to the provision and performance of the role will meet the requirements of the post.
Key Tasks: In accordance with the requirements of Schedule 6 Part 3 and Schedule 8 Part 3 as supplemented by other provisions in this Contract:	
(i)	Manage the requirements of road safety and accident investigation and prevention measures including road safety audits until the Service End Date.
(ii)	Nominate appropriate personnel for road safety audit team membership.
(iii)	Ensure adequate information is submitted by the Designer for road safety audits.
(iv)	Provide input into the development control process when relevant.
(v)	Certify all road safety audit reports.
(vi)	Liaise closely and cooperate with the Director, Emergency Services, relevant local authorities and other stakeholders on road safety issues.
(vii)	Attend Route Safety Groups and assist the Director in the development of joint road safety initiatives nationally and in the local area.

Role: Integrated Roads Information System (IRIS) Coordinator	The Integrated Roads Information System Coordinator supports the Business Manager. Responsibilities include the following Operating Company activities associated with the functionality of the Integrated Roads Information System : • coordinate software installation on Operating Company devices where applicable, • coordinate training for relevant Operating Company staff, • coordinate day to day usage of Integrated Roads Information System functionality, • coordinate data entry validation and correction procedures, • coordinate reporting requirements, • input views via the Integrated Roads Information System user group to assist the Director to continually develop the functionality of the Integrated Roads Information System.
Qualifications and Experience	Degree, Higher National Diploma or Higher National Certificate, or Scottish Vocational Qualification Level 4 or above in an appropriate engineering discipline relevant to the role. Significant experience within the engineering field and proven understanding of information and communication technology concepts, work practices and methodologies. It is expected the post holder should have at least seven years' relevant experience.

Key Tasks: In accordance with the requirements of Schedule 4 Part 2 and Schedule 7 Part 1 as supplemented by other provisions of this Contract:

(i)	Provide the Director with the names and email addresses of staff whom the Operating Company has authorised to use the functionality of Integrated Roads Information System functionality and notify the Director of any changes to this information.
(ii)	Attend the Integrated Roads Information System user group at the dates and times notified in writing by the Director.
(iii)	Support the Business Manager and the Director in the rollout and initial training for the Integrated Roads Information System including the routine maintenance & management function of the Integrated Roads Information System during Mobilisation Period 1.
(iv)	Ensure ongoing compliance with the general operational requirements of the routine maintenance & management function of the Integrated Roads Information System in addition to the other functions of the Integrated Roads Information System.

(v)	Ensure compliance with the Management Systems and Quality Plan in the operation of the routine maintenance and management function of the Integrated Roads Information System in addition to the other functions of the Integrated Roads Information System.
(vi)	Arrange with the Director appropriate training for Operating Company staff in the use and operation of the Integrated Roads Information System including the routine maintenance and management function in addition to the other functions of the Integrated Roads Information System.
(vii)	Oversee provision of appropriate Data Capture Device hardware to the Operating Company as required by this Contract.

Role: Structural Health Monitoring (SHM) and Supervisory Control and Data Acquisition (SCADA) Officer	The Structural Health Monitoring and Supervisory Control and Data Acquisition Officer is the Operating Company's point of contact for all matters relating to the Structural Health Monitoring and Supervisory Control and Data Acquisition Systems. The post holder will have broad technical skills and in addition strong soft skills including organisation and planning, negotiations, communications, decision making, problem solving and teamwork, These are particularly important to be able to manage the high personnel stress levels that can result from dealing with a potential system emergency.
Qualifications and Experience	Degree in electronic engineering, electrical engineering, control systems, instrumentation or other discipline relevant to the role. At least 7 years experience in a similar area of operation with at least 3 at senior level.

Key Tasks: In accordance with the requirements of Schedule 7 Part 7 as supplemented by other provisions of this Contract:

(i)	Collect information and interpret technical problems.
(ii)	Document Structural Health Monitoring and Supervisory Control and Data Acquisition Systems related issues accurately and quickly.
(iii)	Be capable of working under extreme pressure and in some instances for extended periods of time.
(iv)	Provide 24 hours a day, seven days a week basis support.
(v)	Support remote systems management.
(vi)	Understand all related security issues and the potential serious consequences of a system failure.
(vii)	Manage redundant systems effectively.
(viii)	Implement new technologies to improve efficiency, connectivity and communications.
(ix)	Stay up to date on rapidly changing Supervisory Control and Data Acquisition System technologies.
(x)	Design, code, test, integrate and document Supervisory Control and Data Acquisition System software changes following a consistent Supervisory Control and Data Acquisition Systems maintenance plan.
(xi)	Provide resources to maintain 100% availability/uptime.
(xii)	Identify key risk factors in 'real world' software projects and make defensible and informed decisions for mitigating those risks.

Role: Skid Resistance Manager	The Skid Resistance Manager is responsible for managing activities relating to the skid resistance requirements in the *Design Manual for Roads and Bridges* and the *Guidance Document for Implementing a Skid Resistance Policy* issued by Transport Scotland.
Qualifications and Experience	It is unlikely that anyone with less than five years' experience relevant to the provision and performance of the role will meet the requirements of the post.

Key Tasks: in accordance with the requirements of Schedule 4 Part 1 as supplemented by other provisions in this Contract:

(i)	Nominate personnel for and manage a skid resistance policy team to deliver the skid resistance requirements of this Contract.
(ii)	Manage the annual cycle of skid resistance management activities including production of the monthly progress reports and annual report.
(iii)	Liaise and coordinate with the Planned Maintenance Manager to ensure recommendations arising from skid resistance management activities are incorporated into the programme and budget preparation process.
(iv)	Liaise and coordinate with the Operations Manager on Scheme identification and ensure that skid resistance management detailed Site investigations requirements are undertaken as part other activities where practicable to minimise disruption on the Trunk Road network.
(v)	Attend with a practitioner from the skid resistance team a Transport Scotland Skid Policy User Group a minimum of four times in each Annual Period.

Role: Winter Service Manager	The Winter Service Manager is responsible for all aspects of planning and delivery of the Severe Weather service. He is assisted by Winter Service Duty Officers.
Qualifications and Experience	It is unlikely that anyone with less than seven years' experience relevant to the provision and performance of the role will meet the requirements of the post. Within a rolling period of seven years, the Winter Service Manager must have attended weather forecasting training or refresher courses and received training on the operation of road weather information systems and will be expected to complete training on all systems used to determine, monitor and record satisfactory delivery of the Winter Service including data logging and GPS tracking.

Key Tasks: In accordance with the requirements of Schedule 7 Part 2 as supplemented by other provisions in the Contract:

(i)	Deliver the Winter Service in accordance with the Winter Service Plan.
(ii)	Authorise proposed winter treatments and provide advice and support to the Winter Service Duty Officers.
(iii)	Initiate and review establishment of the Winter Service desk.
(iv)	Review all Winter Service operations to identify weaknesses noted from observations and reports by Winter Service operators and Winter Service Duty Officers. Identify and report on opportunities to introduce service delivery innovations.

Role: Winter Service Duty Officers	The Winter Service Duty Officers receive and monitor weather forecasts and advise on suitable treatment action and are responsible for the overall coordination of Winter Service operations within the Unit and the collation of information from a range of sources including from Winter Service operators on a 24 hours a day, seven days a week basis.
Qualifications and Experience	Must be trained and competent in the winter decision-making process. Must have attended weather forecasting training or refresher courses and received training on the operation of road weather information systems and must have completed training on all systems used to determine, monitor and record satisfactory delivery of the Winter Service including data logging and GPS tracking. It is unlikely that anyone with less than four years' experience relevant to the provision and performance of the role will meet the requirements of the post.

Key Tasks: In accordance with the requirements of Schedule 7 Part 2 as supplemented by other provisions in this Contract:

(i)	Obtain the daily forecast and forecast updates from the specialist forecast provider.
(ii)	Decide on which treatment actions are to be taken and keep Records relating to each decision made.
(iii)	Advise the Winter Service Manager of updates to the weather forecasts received outside the normal Working Hours.
(iv)	Supply the Traffic Scotland Operations and Infrastructure Service Contractor with the forecasts and action decisions.

SCOTTISH MINISTERS' REQUIREMENTS

SCHEDULE 5 PART 5

AUDITS BY THE PERFORMANCE AUDIT GROUP

CONTENTS **Page No.**

1.	**AUDITS BY THE PERFORMANCE AUDIT GROUP**	**1**
1.1	Introduction	1
1.2	Arrangements for Programmed Audits by the Performance Audit Group	1
1.3	Unannounced Audits	2
1.4	Conduct of Audits	2

SCOTTISH MINISTERS' REQUIREMENTS

SCHEDULE 5 PART 5

AUDITS BY THE PERFORMANCE AUDIT GROUP

1. AUDITS BY THE PERFORMANCE AUDIT GROUP

1.1 Introduction

1.1.1 The performance of the Operating Company in delivering the requirements of this Contract will be audited by the Performance Audit Group.

1.1.2 The Director and the Performance Audit Group shall undertake both unannounced and programmed audits. When the Performance Audit Group intends to carry out a programmed audit, it will give 10 Working Days' notice to the Operating Company.

The Operating Company shall allow the Performance Audit Group to have unrestricted access at all times to the Operating Company's Central Office, offices, depots and all other places where work is prepared or executed or documents and Records are stored, including all personnel documentation and Records, in connection with any part of the Operations.

1.1.3 This Schedule does not apply to any other audits required under this Contract which are carried out by other organisations acting on behalf of the Director.

1.2 Arrangements for Programmed Audits by the Performance Audit Group

1.2.1 The arrangements for programmed audits by the Performance Audit Group are as follows:

(i) no later than 30 days prior to Commencement of Service Date 1, the Operating Company shall provide the Performance Audit Group in writing with the names and contact details of the persons whom the Performance Audit Group shall contact to arrange audits,

(ii) the Operating Company shall notify the Performance Audit Group in writing of changes to the persons whom the Performance Audit Group shall contact to arrange audits,

(iii) the Performance Audit Group shall contact the relevant persons to arrange audits at least 10 Working Days before the proposed audit date,

(iv) the Performance Audit Group shall notify the Operating Company of the date, time and location of the audit and the name of the Performance Audit Group principal contact,

(v) the Operating Company shall provide every assistance in ensuring unrestricted access for the Performance Audit Group and shall make available all necessary resources to allow the Performance Audit Group to carry out and complete the audits,

(vi) at least five Working Days before the date notified for the audit, the Performance Audit Group shall write to the Operating Company confirming:

(a) the location, date, time and programme for the audit,

(b) the activities, topics or Records to be audited,

(c) the topics for which documented procedures shall be made available for review by the Performance Audit Group, and

(d) the names of the Performance Audit Group audit staff and the contact person who shall be undertaking the audit ("Auditors"), and

(vii) the Operating Company shall contact the Performance Audit Group immediately on receipt of the details specified in paragraph 1.2.1 (vi) if it does not understand any matter in relation to the audit and shall clarify the requirements prior to the date of the audit.

1.3 Unannounced Audits

1.3.1 The Performance Audit Group will conduct unannounced audits when instructed by the Director.

1.4 Conduct of Audits

1.4.1 The Operating Company shall arrange for all requested data and other relevant and appropriate information to be available at the location of the audit and shall provide suitable working areas and facilities for the Auditors. If requested by the Auditors, the Operating Company shall provide photocopies or Electronic Copies of selected information. This requirement shall apply particularly to data in support of charges that are or may be included in invoices and Statements for payments.

1.4.2 A brief entry meeting between the Operating Company and the Performance Audit Group shall be held immediately before the audit. A senior representative of the Operating Company shall attend this meeting, together with those staff who have direct responsibility for the data and activities to be audited. The purpose of the meeting is to ensure that the Operating Company's staff are aware of the purpose of the audit and that the required data and information are available.

1.4.3 Performance Audit Group staff shall not discuss contractual issues with the Operating Company during the audit but may take notes or request copies of documents to enable them to bring issues to the attention of the Director.

1.4.4 The Operating Company's staff shall not generally be required to be present at all times throughout the audit, but shall be readily available to deal with any questions that the Performance Audit Group may have. When requested, the relevant member of such staff shall initial the Auditors checklist or audit notes alongside points of fact recorded by the Auditors to confirm the accuracy of these. The relevant member of such staff shall subsequently assist in any relevant discussions at the exit meeting.

1.4.5 An exit meeting between the Operating Company and the Performance Audit Group shall be held at the end of the audit. A senior representative of the Operating Company shall attend the exit meeting with a representative from each of the offices, departments and sections of the Operating Company which were audited.

The Performance Audit Group shall inform the Operating Company of any matters arising from the audit and of any data and information that were not made available for inspection as part of the audit. The Operating Company shall have an opportunity at the exit meeting to record any comments that it may have regarding the manner in which the audit was conducted.

1.4.6 Any findings that the Performance Audit Group identifies shall be explained to the Operating Company. The Operating Company shall sign the relevant forms in acknowledgement that it understands the issues raised.

Whenever possible, the actions and timescales required to:

(i) correct the specific Non-Conformances identified in the audit,

(ii) prevent recurrence of the Non-Conformances, and

(iii) investigate the causes of the Non-Conformances and where necessary initiate further corrective actions,

to address the audit findings shall be agreed between the Operating Company and the Performance Audit Group at the exit meeting.

Subject to the other provisions of this Contract, the Operating Company shall take action to ensure the specific Non-Conformances are corrected within 10 Working Days after identification.

The Operating Company shall take immediate action to mitigate the effect of the Non-Conformances.

1.4.7 Where there is no agreement on actions and timescales reached at the exit meeting, the Operating Company shall write to the Performance Audit Group, providing the details stated in paragraph 1.4.6 of this Part, within three Working Days after the completion of the audit. In these circumstances, the Operating Company shall still be required to adhere to the actions and timescale requirements stated in paragraph 1.4.6 of this Part for mitigating and correcting Non-Conformances.

1.4.8 The Performance Audit Group will issue a report on the audit to the Operating Company, copied to the Director, within five Working Days after completion of the audit.

SCOTTISH MINISTERS' REQUIREMENTS

SCHEDULE 5 PART 6

PERFORMANCE MEASUREMENT

CONTENTS **Page No.**

1.	**REQUIREMENTS**	**1**
1.1	General Requirements	1
1.2	Performance Indicators	1
1.3	Monitoring Indicators	1
1.4	Payment Adjustment Factors	1
2.	**PUBLICATION OF PERFORMANCE AND MONITORING INDICATORS**	**2**
ANNEX 5.6/A – Performance Indicators		**3**
ANNEX 5.6/B – Monitoring Indicators		**59**
ANNEX 5.6/C – Payment Adjustment Factors		**89**

SCOTTISH MINISTERS' REQUIREMENTS

SCHEDULE 5 PART 6

PERFORMANCE MEASUREMENT

1. REQUIREMENTS

1.1 General Requirements

1.1.1 The Director will measure the performance of the Operating Company through the use of performance measures. The performance measures the Director will use are:

(i) Performance Indicators,

(ii) Monitoring Indicators, and

(iii) Payment Adjustment Factors.

1.1.2 The Operating Company shall carry out the necessary data aggregation and analysis to provide the information required for all Performance Indicators, Monitoring Indicators and Payment Adjustment Factors to the Director no later than five Working Days after the end of the relevant reporting period in the format provided by the Director, with a copy to the Performance Audit Group.

1.1.3 The Operating Company shall work with the Director to amend and improve the Performance Indicators and the Monitoring Indicators until the Service End Date with the aim of achieving continuous improvement in service delivery. The performance targets for any new or amended Performance Indicators shall be set by the Director with the objective of improving performance until the Service End Date.

1.2 Performance Indicators

1.2.1 The Director will use the Performance Indicators detailed in Annex 5.6/A of this Part to measure the performance of the Operating Company in complying with this Contract.

1.2.2 The Performance Audit Group may issue a Notice of Non-Conformance when a Performance Indicator indicates a failure to achieve the required performance target stated in Annex 5.6/A of this Part.

1.2.3 The maximum value which will be reported for any Performance Indicator will be 100 percent, indicating achievement of the specified requirements.

1.3 Monitoring Indicators

1.3.1 The Director will use the Monitoring Indicators detailed in Annex 5.6/B of this Part to measure and monitor service performance.

1.4 Payment Adjustment Factors

1.4.1 The Payment Adjustment Factors are detailed in Annex 5.6/C of this Part and shall be used to measure the items subject to Payment Adjustment Factors.

1.4.2 The measurement of items subject to Payment Adjustment Factors is set out in Schedule 2 Part 1.

2. PUBLICATION OF PERFORMANCE AND MONITORING INDICATORS

2.1.1 The Director may publish the Performance Indicators and Monitoring Indicators within the public domain.

This is Annex 5.6/A to Schedule 5 Part 6 referred to in the foregoing Agreement between Scottish Ministers and Amey LG Limited.

SCOTTISH MINISTERS' REQUIREMENTS

SCHEDULE 5 PART 6

PERFORMANCE MEASUREMENT

ANNEX 5.6/A – Performance Indicators

SCOTTISH MINISTERS' REQUIREMENTS

SCHEDULE 5 PART 6

PERFORMANCE MEASUREMENT

ANNEX 5.6/A – Performance Indicators

No.	Title	Measure Description	Reporting period	Target
00	Overall Performance Indicator	The arithmetical average of all the Performance Indicators listed below which have a target of 100% and are reported each reporting period.	Monthly	100%
01	RIDDOR *(Reporting of Injuries, Diseases and Dangerous Occurrences Regulations)*	The incident rate based on the number of RIDDOR 'reportable' accidents, incidents and injuries reported within working sites under control or supervision of the Operating Company.	Monthly	Year on year improvement on a benchmark to be agreed in the first Annual Period
02	Accident Frequency Rate	The accident frequency rate based on the number RIDDOR 'reportable' incidents and injuries reported within working sites under control or supervision of the Operating Company.	Monthly	Year on year improvement on a benchmark to be agreed in the first Annual Period
03a	Repair of Category 1 Defects	The percentage of all Category 1 Defect repairs that are carried out within the required timescales.	Monthly	100%
03b	Repair of Category 1 Defects – Forth Road Bridge	The percentage of all Category 1 Defect repairs that are carried out within the required timescales.	Monthly	100%
04	Incident Response	Percentage of Incident Response(s) within the required timescales.	Monthly	100%

No.	Title	Measure Description	Reporting period	Target
05	Safety Inspections and Patrols	Percentage of days on which link/sections within the Unit are within the required inspection interval for Safety Inspections, Safety Patrols and night time Safety Patrols.	Monthly	100%
06	Detailed Inspections	Percentage of Detailed Inspections carried out within the required intervals.	Monthly	100%
07	Maintenance	Percentage of asset (excluding maintenance of grassed areas) maintained within the required timescales.	Monthly	100%
08	Structures Principal Inspections	Percentage of Structures Principal Inspections and reports carried out to agreed programme excluding the Principal Crossings.	Monthly	100%
09	Structures General Inspections	Percentage of Structures General Inspections and reports carried out to agreed programme excluding the Principal Crossings.	Monthly	100%
10	Forth Road Bridge Inspections	Percentage of inspections and reports carried out on the Forth Road Bridge to agreed programme.	Monthly	100%
11	Queensferry Crossing Inspections	Percentage of inspections and reports carried out on the Queensferry Crossing to agreed programme.	Monthly	100%
12a	Structures maintenance	Percentage of Structures maintenance activities carried out within the required timescales excluding the Principal Crossings.	Monthly	100%
12b	Structure maintenance – Forth Road Bridge	Percentage of Structure maintenance activities carried out within the required timescales.	Monthly	100%
13	Winter Service treatments	Percentage of Winter Service treatments carried out in compliance with the required timescales.	Monthly (winter period)	100%
14	Actual spend against profile	Percentage of total spend on Schemes as a proportion of profiled total spend.	Monthly	100%
15	Works Contracts cost estimates	Accuracy of Works Contracts cost estimates.	Monthly	100%
16	Works Contracts out turn cost	Success in delivering Schemes at the awarded tender value.	Monthly	100%

No.	Title	Measure Description	Reporting period	Target
17	Closure of Non-Conformances	Percentage of Non-Conformances closed out within the required timescales.	Monthly	100%
18	Submission of reports	Percentage of monthly reports and submissions that are submitted within the required timescales.	Monthly	100%
19	Planning applications	Percentage of planning applications processed within the required timescales.	Monthly	100%
20	Communications response	Percentage of communications processed by the Operating Company within the required timescales.	Monthly	100%
21	Carbon emissions	Annual carbon emissions.	Annually	Year on year improvement on a benchmark to be agreed after the third Annual Period
22	Grassed area	Percentage of grassed area maintained in accordance with the Scottish Ministers' Requirements.	Monthly (growing period)	100%
23a	Recording Inventory Condition Rating	The percentage of all inventory condition ratings that are recorded within the required timescales excluding the Principal Crossings.	Monthly	100%
23b	Recording Inventory Condition Rating – Forth Road Bridge	The percentage of all inventory condition ratings that are recorded within the required timescales for the Forth Road Bridge.	Monthly	100%
23c	Recording Inventory Condition Rating – Queensferry Crossing	The percentage of all inventory condition ratings that are recorded within the required timescales for the Queensferry Crossing.	Monthly	100%
24	Community Engagements and Community Benefits	The percentage of all opportunities created, visits and tours undertaken and meetings attended during the reporting period.	Monthly	100%

No.	Title	Measure Description	Reporting period	Target
25	Queensferry Crossing Structural Health Monitoring System Reporting	Production and distribution of Queensferry Crossing Structural Health Monitoring Data Reports	Annually	100%
26	Queensferry Crossing Supervisory Control And Data Acquisition System Maintenance	Percentage of Supervisory Control And Data Acquisition System maintenance activities carried out within the required timescales on the Queensferry Crossing.	Monthly	100%
27a	Access Systems inspection - Forth Road Bridge	Percentage of inspections on Access Systems and reports carried out on the Forth Road Bridge and to agreed programme.	Monthly	100%
27b	Access Systems maintenance and testing – Forth Road Bridge	Percentage of Access Systems maintenance activities and testing carried out on the Forth Road Bridge and within the required timescales and equipment availability.	Monthly	100%
28a	Access Systems inspection - Queensferry Crossing	Percentage of inspections on Access Systems and reports carried out on the Queensferry Crossing and to agreed programme.	Monthly	100%
28b	Access Systems maintenance and testing – Queensferry Crossing	Percentage of Access Systems maintenance activities and testing carried out on the Queensferry Crossing and within the required timescales and equipment availability.	Monthly	100%
29	Programmed Special Inspections – Forth Road Bridge	Percentage of programmed structural Special Inspections and reports carried out on the Forth Road Bridge and to agreed programme.	Monthly	100%

Performance Indicator No. 01			
Title	RIDDOR		
Measure Description	The incident rate based on the number of RIDDOR 'reportable' accidents, incidents injuries and diseases reported within working sites under control or supervision of the Operating Company.		
Measure Aim	To measure the effectiveness of the Operating Company's safety processes by monitoring the incident rate per 100,000 hours worked, according to the standard reporting practice of the Health and Safety Executive.		
Methodology	The Operating Company shall use the records required by the *Reporting of Injuries, Diseases and Dangerous Occurrences Regulations* (RIDDOR) of accidents, incidents, injuries and diseases incurred within their Unit to produce the Performance Indicator.		
Data input	A = total number of RIDDOR reportable deaths or major injuries during reporting period, B = total number of RIDDOR reportable over seven day lost time injuries during reporting period, C = total number of RIDDOR reportable diseases during reporting period, D = total number of RIDDOR reportable dangerous occurrences during reporting period, F = Total number of working hours on the Unit during reporting period. The following data shall be derived based on the sum of the previous 12 months* data: P = sum of all RIDDOR reportable incidents during previous 12 months* (A+B+C+D), R = sum of all working hours during previous 12 months* (Sum of F values). *or number of months elapsed after Commencement of Service Date 1 whichever is the lesser.		
Formula	Performance Indicator = (P/R) x 100,000		
Required supporting information	In addition to reporting the Performance Indicator, the Operating Company shall also provide the following supporting information: • Data input values. • Any trends in the figures. • Lists and commentary of all incidents during period.		
Measurement Period	Monthly as from Commencement of Service Date 1	**Data Source**	RIDDOR data
Return Format	RIDDOR score	**Decimal places**	1

Performance Indicator No. 02	
Title	Accident Frequency Rate
Measure Description	The accident frequency rate based on the number RIDDOR 'reportable' incidents and injuries reported within working sites under control or supervision of the Operating Company.
Measure Aim	To measure the effectiveness of the Operating Company's safety processes by monitoring the frequency rate of injuries per 100,000 hours worked, according to the standard reporting practice of the Health and Safety Executive.
Methodology	The Operating Company shall use the records required by the *Reporting of Injuries, Diseases and Dangerous Occurrences Regulations* and Records of other accidents and near misses required by Schedule 5 Part 1, of accidents, incidents and injuries and near misses incurred within the Unit to produce the Performance Indicator.
Data input	A = total number of RIDDOR reportable deaths or major injuries during reporting period, B = total number of RIDDOR reportable over seven day lost time injuries during reporting period, C = total number of RIDDOR reportable diseases during reporting period, D = total number of RIDDOR reportable dangerous occurrences during reporting period, E = total number of other accidents (non RIDDOR reportable) recorded in accident books during reporting period, F = Total number of working hours on Unit during reporting period. The following data shall be derived based on the sum of the previous 12 months* data: P = sum of all accidents and incidents during previous 12 months* (A+B+C+D+E), R = sum of all working hours during previous 12 months* (Sum of F values). *or number of months elapsed after Commencement of Service Date 1 whichever is the lesser.
Formula	Performance Indicator = (P /R) x 100,000
Required supporting information	In addition to reporting the Performance Indicator, the Operating Company shall also provide the following supporting information: • Data input values. • Any trends in the figures. • Lists and commentary of all incidents during period. • Number of near misses during reporting period.

Performance Indicator No. 02			
Measurement Period	Monthly as from Commencement of Service Date 1	**Data Source**	RIDDOR accident data.
Return Format	Accident frequency rate	**Decimal places**	1

Performance Indicator No. 03a			
Title	Repair of Category 1 Defects		
Measure Description	The percentage of all Category 1 Defect repairs that are carried out within the Unit within the required timescale and with exclusion of Defects listed under Appendix 3/A of this Part.		
Measure Aim	To measure the Operating Company's performance in undertaking the Repair of Category 1 Defects.		
Methodology	The Operating Company shall use the Records in the routine maintenance and management function of the Integrated Roads Information System of the actual dates and times when the Operating Company was aware of the presence of a Category 1 Defect and the date and time of all temporary and permanent repairs of Category 1 Defects to produce the Performance Indicator.		
Data input	A = total number of Category 1 Defect temporary repairs due during the month, B = total number of Category 1 Defect temporary repairs repaired on time during the month, C = total number of Category 1 Defect permanent repairs due during the month, D = total number of Category 1 Defect permanent repairs repaired on time during the month.		
Formula	Performance Indicator for temporary repairs = (B/A) x 100% Performance Indicator for permanent repairs = (D/C) x 100% Reported Performance Indicator = ((B + D) / (A + C)) x 100%		
Required supporting information	In addition to reporting the Performance Indicator, the Operating Company shall also provide the following supporting information: • Data input values. • Any trends in the figures. • Any trends or differences between temporary and permanent repairs. • Numbers of each Defect type raised each month and their trends. • Numbers of Defects raised by inventory type each month and their trends. • Lists of all late and overdue Defects and analysis of their reasons.		
Measurement Period	Monthly as from Commencement of Service Date 1	**Data Source**	Routine maintenance and management function of the Integrated Roads Information System
Return Format	Percentage	**Decimal places**	0

Performance Indicator No. 03b	
Title	Repair of Category 1 Defects – Forth Road Bridge
Measure Description	The percentage of all Category 1 Defect repairs, listed under Appendix 3/A of this Part that are carried out within the required timescales.
Measure Aim	To measure the Operating Company's performance in undertaking the repair of Category 1 Defects on the Forth Road Bridge.
Methodology	The Operating Company shall use the Records in the routine maintenance and management function of the Integrated Roads Information System of the actual dates and times when the Operating Company was aware of the presence of a Category 1 Defect and the date and time of all temporary and permanent repairs of Category 1 Defects to produce the Performance Indicator.
Data input	For each of the Category 1 Defects as listed in Appendix 3/A of this Part, the following shall be calculated: A = total number of Category 1 Defect temporary repairs due during the month, B = total number of Category 1 Defect temporary repairs repaired on time during the month, C = total number of Category 1 Defect permanent repairs due during the month, D = total number of Category 1 Defect permanent repairs repaired on time during the month.
Formula	Performance Indicator for temporary repairs = (B/A) x 100% Performance Indicator for permanent repairs = (D/C) x 100% Reported Performance Indicator = ((B + D) / (A + C)) x 100% Overall Performance Indicator shall be calculated for the activities listed in Appendix 3/A of this Part.
Required supporting information	In addition to reporting the Performance Indicator, the Operating Company shall also provide the following supporting information: • Data input values. • Any trends in the figures. • Any trends or differences between temporary and permanent repairs. • Numbers of each Defect type raised each month and their trends. • Numbers of Defects raised by inventory type each month and their trends. • Lists of all late and overdue Defects and analysis of their reasons.

Performance Indicator No. 03b			
Measurement Period	Monthly as from Commencement of Service Date 1	**Data Source**	Routine maintenance and management function of the Integrated Roads Information System
Return Format	Percentage	**Decimal places**	0

Appendix 3/A – Forth Road Bridge related Category 1 Defects

Bridge Category 1 Defects

Failure of an end trimmer on the side spans

Failure of an end trimmer on the main span

Failure of the components of the comb joint (between the northern side tower and northern approach viaduct)

Failure of any of the five no. movement joints adjacent to the side towers or the approach viaducts

Failure of the components of the Demag (main tower) expansion joints

Failure of welds or components of the truss end links at main towers

Performance Indicator No. 04	
Title	Incident Response (excluding the Trunk Road Incident Support Service)
Measure Description	Percentage of Incident Responses within the required timescales.
Measure Aim	To measure the Operating Company's performance in providing Incident Response.
Methodology	The Operating Company shall use the Records in the management of Incidents function of the Integrated Roads Information System, required by Schedule 7 Part 3, to produce the Performance Indicator.
Data input	A = total number of initial responses required during the reporting period, B = total number of initial responses carried out on time during the reporting period, C = total number of secondary responses required during the reporting period, D = total number of secondary responses carried out on time during the reporting period, E = total number of contingency responses required during the reporting period, F = total number of contingency responses carried out on time during the reporting period.
Formula	Performance Indicator for initial response = (B/A) x 100% Performance Indicator for secondary response = (D/C) x 100% Performance Indicator for contingency response = (F/E) x 100% Reported Performance Indicator N = ((B + D + F)/(A + C +E)) x 100%
Required supporting information	In addition to reporting the Performance Indicator, the Operating Company shall provide the following supporting information for all Incident Response and the Trunk Road Incident Support Service: • Data input values. • Any trends in the figures. • Reasons for any failures and actions taken to prevent recurrence. • Percentage of initial responses carried out >20 minutes early. • Percentage of initial responses carried out 20-10 minutes early. • Percentage of initial responses carried out 10-0 minutes early. • Percentage of initial responses carried out 0-10 minutes late. • Percentage of initial responses carried out >10 minutes late.

Performance Indicator No. 04			
Measurement Period	Monthly as from Commencement of Service Date 1	**Data Source**	Incidents data required by Schedule 7 Part 3
Return Format	Percentage	**Decimal places**	0

Performance Indicator No. 05	
Title	Safety Inspections and Patrols
Measure Description	Percentage of days on which each link/section is within the required inspection interval for Safety Inspections, Safety Patrols and night time Safety Patrols.
Measure Aim	To measure the Operating Company's performance in carrying out of Safety Inspections, Safety Patrols and night time Safety Patrols.
Methodology	The Operating Company shall use the Records in the routine maintenance and management function of the Integrated Roads Information System of the actual date and time when the Operating Company carried out Safety Inspections, Safety Patrols and night time Safety Patrols to produce the Performance Indicator.
Data input	A = the number of days during the reporting period on which each link/section is compliant with the specification in respect of Safety Inspections, aggregated for all link/sections recorded in routine maintenance and management function of the Integrated Roads Information System, B = the number of days during the reporting period on which each link/section is not compliant with the specification in respect of Safety Inspections, aggregated for all link/sections recorded in routine maintenance and management function of the Integrated Roads Information System, C = the number of days during the reporting period on which each link/section is compliant with the specification in respect of Safety Patrols, aggregated for all link/sections recorded in routine maintenance and management function of the Integrated Roads Information System, D = the number of days during the reporting period on which each link/section is not compliant with the specification in respect of Safety Patrols, aggregated for all link/sections recorded in routine maintenance and management function of the Integrated Roads Information System, E = the number of days during the reporting period on which each link/section is compliant with the specification in respect of night time Safety Patrols, aggregated for all link/sections recorded in routine maintenance and management function of the Integrated Roads Information System, F = the number of days during the reporting period on which each link/section is not compliant with the specification in respect of night time Safety Patrols, aggregated for all link/sections recorded in routine maintenance and management function of the Integrated Roads Information System.
Formula	Performance Indicator for Safety Inspection = ((A) / (A+B)) x 100% Performance Indicator for Safety Patrol = ((C) / (C+D)) x 100% Performance Indicator for night time Safety Patrol = ((E) / (E+F)) x 100%

Performance Indicator No. 05			
	Reported Performance Indicator = ((A + C + E) / (A + B + C + D + E + F)) x 100%.		
Required supporting information	In addition to reporting the Performance Indicator, the Operating Company shall also provide the following supporting information: • Data input values. • Any trends in the figures. • Any trends or differences between each inspection type. • Lists of all late and overdue inspections and commentary on their reasons.		
Measurement Period	Monthly as from Commencement of Service Date 1	**Data Source**	Routine maintenance and management function of the Integrated Roads Information System
Return Format	Percentage	**Decimal places**	0

Performance Indicator No. 06			
Title	Detailed Inspections		
Measure Description	Percentage of Detailed Inspections carried out within the required intervals.		
Measure Aim	To measure the Operating Company's performance in carrying out Detailed Inspections.		
Methodology	The Operating Company shall use the Records in the routine maintenance and management function of the Integrated Roads Information System of the actual date and time when the Operating Company carried out Detailed Inspections on each inventory item to calculate the Performance Indicator.		
Data input	For each of the interval based Detailed Inspection activities as listed in Appendix 6/A of this Part the following shall be calculated: A = the number of inventory items where the inspection activity is compliant with the required Detailed Inspection activity interval, B = the number of inventory items where the inspection activity is not compliant with the required Detailed Inspection activity interval.		
Formula	Detailed Inspection activity Performance Indicator = A/(A+B) x 100%. Overall Performance Indicator shall be the arithmetical average of all the Detailed Inspection activity Performance Indicator percentages for the Detailed Inspection activities listed in Appendix 6/A of this Part.		
Required supporting information	In addition to reporting the Performance Indicator, the Operating Company shall also provide the following supporting information: • Data input values for each Detailed Inspection activity. • Any trends in the figures. • Lists of all late and overdue inspections and analysis of their reasons.		
Measurement Period	Monthly as from Commencement of Service Date 1	**Data Source**	Routine maintenance and management function of the Integrated Roads Information System
Return Format	Percentage	**Decimal places**	0

Appendix 6/A – Inspection Activities

Inspection activity
Carriageway
Carriageway (offside)
Footways and cycleways
Covers, gratings and frames
Covers, gratings and frames (offside)
Kerbs and edgings
Kerbs and edgings (offside)
Linear drainage system
Gullies, catchpits, soakaways and oil separators
Gullies, catchpits, soakaways and oil separators (offside)
Drainage grips
Drainage grips (offside)
Ditches
Filter drain
Filter drain (offside)
Balancing ponds
Head walls, aprons and spillways
Sluices, tidal flaps, penstocks, valves, pumps and other specialist equipment
Geotechnical asset
Earthwork monitoring
Grass areas
Bulbs and wildflower areas
Woodland areas and trees
Woodland areas and trees (mature)
Scrub, shrub and hedges
Wetland areas
Special ecological measures
Invasive species
Vehicle road restraint system
Vehicle road restraint system (tensioning devices)
Pedestrian road restraint system
Fences walls screens and noise barriers
Road markings (high speed monitor)
Road markings (Hand held)

Inspection activity

Road marking (visual survey)

Road markings (skid resistance)

Road studs (visual, daytime)

Road studs (conspicuity, night time)

Road traffic sign (visual performance)

Road traffic sign (structural integrity)

Road traffic sign (electrical safety & operation)

Road traffic sign (sign plate replacement)

Road traffic sign (co-efficient of retroreflectivity)

Road traffic sign (obscuration)

Road traffic sign (electrical testing)

Traffic signals

Traffic signals (operational review)

Road lighting

Arrester beds

Traffic control barriers (structural condition & integrity)

Traffic control barriers (electrical)

Node markers

Network referencing

Drainage structures

Traffic signals (obscuration)

Road sensors

Snow poles, signs, fences and barriers

Performance Indicator No. 07			
Title	Maintenance (excluding maintenance of grassed areas).		
Measure Description	Percentage of asset maintained within the required timescales.		
Measure Aim	To measure the Operating Company's performance in carrying out maintenance.		
Methodology	The Operating Company shall use the Records in the routine maintenance and management function of the Integrated Roads Information System of the actual date and time when the Operating Company carried out maintenance to produce the Performance Indicator.		
Data input	For each of the interval based maintenance activities as listed in Appendix 7/A of this Part the following shall be calculated: A = total number/length/area of live inventory items on network, B = total number/length/area of live inventory items where the last maintenance action is within the required maintenance interval at the end of the reporting period.		
Formula	Each maintenance activity Performance Indicator = (B/A) x 100%. Overall Performance Indicator shall be the arithmetical average of all the maintenance activity Performance Indicator percentages for the maintenance activities listed in Appendix 7/A of this Part.		
Required supporting information	In addition to reporting the Performance Indicator, the Operating Company shall also provide the following supporting information: • Data input values for each maintenance activity. • Any trends in the figures. • Lists of all late and overdue activities and analysis of their reasons.		
Measurement Period	Monthly as from Commencement of Service Date 1	**Data Source**	Routine maintenance and management function of the Integrated Roads Information System
Return Format	Percentage	**Decimal places**	0

Appendix 7/A – Maintenance Activities

Interval Based Maintenance Activities

Maintenance activity
Cleaning of slot drains and kerb block drains
Cleaning of gullies, catchpits, soakaways, manholes and oil separators
Cleaning of drainage grips
Harrowing of filter drain
Special ecological measures
Vehicle road restraint system (tensioning)
Road traffic signs (sign face cleaning)

Performance Indicator No. 08			
Title	Structures Principal Inspections		
Measure Description	Percentage of Structures Principal Inspections and reports carried out to agreed programme excluding the Principal Crossings.		
Measure Aim	Measure the Operating Company's performance in carrying out Structures Principal Inspections on programme, excluding those carried out on the Principal Crossings.		
Methodology	The Operating Company shall use the Records in the structures management function of the Integrated Roads Information System of the programmed inspection dates and the actual inspection dates to produce the Performance Indicator.		
Data input	A = total cumulative number of Principal Structures Inspection reports programmed to be completed by the end of current reporting period, B = total cumulative number of Principal Inspection reports completed at the end of current reporting period.		
Formula	Reported Performance Indicator = (B/A) x 100%		
Required supporting information	In addition to reporting the Performance Indicator, the Operating Company shall also provide the following supporting information: • Data input values. • Any trends in the figures. • Lists of all late and overdue activities and analysis of their reasons.		
Measurement Period	Monthly as from Commencement of Service Date 1	**Data Source**	Structures management function of the Integrated Roads Information System
Return Format	Percentage	**Decimal places**	0

Performance Indicator No. 09			
Title	Structures General Inspections		
Measure Description	Percentage of Structures General Inspections and reports carried out to agreed programme excluding the Principal Crossing.		
Measure Aim	Measure the Operating Company's performance in carrying out Structures General Inspections on programme, excluding those carried out on the Principal Crossings.		
Methodology	The Operating Company shall use the Records in the structures management function of the Integrated Roads Information System of the programmed inspection dates and the actual inspection dates to produce the Performance Indicator.		
Data input	A = total cumulative number of Structures General Inspection reports programmed to be completed by the end of current reporting period, B = total cumulative number of Structures General Inspection reports completed at the end of current reporting period.		
Formula	Reported Performance Indicator = (B/A) x 100%		
Required supporting information	In addition to reporting the Performance Indicator, the Operating Company shall also provide the following supporting information: • Data input values. • Any trends in the figures. • Lists of all late and overdue activities and analysis of their reasons.		
Measurement Period	Monthly as from Commencement of Service Date 1	**Data Source**	Structures management function of the Integrated Roads Information System
Return Format	Percentage	**Decimal places**	0

Performance Indicator No. 10			
Title	Forth Road Bridge Inspections		
Measure Description	Percentage of inspections and reports carried out on the Forth Road Bridge to the agreed programme.		
Measure Aim	Measure the Operating Company's performance in carrying out inspections on the Forth Road Bridge to programme.		
Methodology	The Operating Company shall use the Records from the inspection scheduled as described in Schedule 7 Part 7 to produce the Performance Indicator.		
Data input	A = total cumulative number of inspection reports programmed to be completed by the end of current reporting period, B = total cumulative number of inspection reports completed at the end of current reporting period.		
Formula	Reported Performance Indicator = (B/A) x 100%		
Required supporting information	In addition to reporting the Performance Indicator, the Operating Company shall also provide the following supporting information: • Data input values. • Any trends in the figures. • Lists of all late and overdue activities and analysis of their reasons.		
Measurement Period	Monthly as from Commencement of Service Date 1	**Data Source**	Operating Company Records Inspection frequencies derived in accordance with the Forth Road Bridge Engineering Manual
Return Format	Percentage	**Decimal places**	0

Performance Indicator No. 11			
Title	Queensferry Crossing Inspections		
Measure Description	Percentage of inspections and reports carried out on the Queensferry Crossing to the agreed programme.		
Measure Aim	Measure the Operating Company's performance in carrying out inspections on the Queensferry Crossing to programme.		
Methodology	The Operating Company shall use the Records from the inspection scheduled as described in Schedule 7 Part 7 to produce the Performance Indicator.		
Data input	A = total cumulative number of inspection reports programmed to be completed by the end of current reporting period, B = total cumulative number of inspection reports completed at the end of current reporting period.		
Formula	Reported Performance Indicator = (B/A) x 100%		
Required supporting information	In addition to reporting the Performance Indicator, the Operating Company shall also provide the following supporting information: • Data input values. • Any trends in the figures. • Lists of all late and overdue activities and analysis of their reasons.		
Measurement Period	Monthly as from Commencement of Service Date 2	**Data Source**	Operating Company Records Inspection frequencies derived in accordance with the Queensferry Crossing Inspection and Maintenance Manual
Return Format	Percentage	**Decimal places**	0

Performance Indicator No. 12a			
Title	Structures Maintenance		
Measure Description	Percentage of Structures maintenance activities carried out within the required timescales excluding the Principal Crossings.		
Measure Aim	To measure the Operating Company's performance in carrying out Structures maintenance, on programme. excluding those carried out on the Principal Crossings,		
Methodology	The Operating Company shall use the Records in the structures management function of the Integrated Roads Information System of the number of Structures with maintenance activities due and the number of Structures with maintenance activities completed to produce the Performance Indicator.		
Data input	A = total cumulative number of Structures with maintenance activities programmed to be completed by the end of the current reporting period, B = total cumulative number of Structures with maintenance activities completed by the end of the current reporting period.		
Formula	Performance Indicator = (B) / (A) x 100%		
Required supporting information	In addition to reporting the Performance Indicator, the Operating Company shall also provide the following supporting information: • Data input values. • Any trends in the figures. • Lists of all late and overdue activities and analysis of their reasons.		
Measurement Period	Monthly as from Commencement of Service Date 1	**Data Source**	Structures management function of the Integrated Roads Information System or Operating Company Records
Return Format	Percentage	**Decimal places**	0

Performance Indicator No. 12b			
Title	Structure Maintenance – Forth Road Bridge		
Measure Description	Percentage of Structure maintenance activities carried out on the Forth Road Bridge and within the required timescales.		
Measure Aim	To measure the Operating Company's performance in carrying out Structure maintenance on the Forth Road Bridge.		
Methodology	The Operating Company shall use the Records in the Forth Road Bridge defects and repair management database of the number of maintenance activities due and the number of maintenance activities completed to produce the Performance Indicator.		
Data input	A = total cumulative number of maintenance activities programmed to be completed by the end of the current reporting period, B = total cumulative number of maintenance activities completed by the end of the current reporting period.		
Formula	Performance Indicator = (B) / (A) x 100%		
Required supporting information	In addition to reporting the Performance Indicator, the Operating Company shall also provide the following supporting information: • Data input values. • Any trends in the figures. • Lists of all late and overdue activities and analysis of their reasons.		
Measurement Period	Monthly as from Commencement of Service Date 1	**Data Source**	Forth Road Bridge Maintenance Database
Return Format	Percentage	**Decimal places**	0

Performance Indicator No. 13			
Title	Winter Service treatments		
Measure Description	Percentage of Winter Service treatments carried out in compliance with required timescales.		
Measure Aim	To measure the Operating Company's performance in carrying out Winter Service activities.		
Methodology	The Operating Company shall use the register, as required by Schedule 7 Part 2, of all daily proposed and actual actions including all dates and times for each route and each treatment to produce the Performance Indicator.		
Data Input	A = number of operations where a planned (precautionary treatment) or unplanned (call out) treatment is required, B = number of operations which are completed within the required treatment timescale, C = number of operations for which full data logger downloads are achieved, D = total number of unplanned (call out) treatments called out, E = total number of unplanned (call out) treatments commenced within required timescale.		
Formula	Performance Indicator (treatment time) = (B/A) x 100% Performance Indicator (data logger downloads) = (C/A) x 100% Performance Indicator (response time) = (E/D) x 100% Overall Performance Indicator shall be the arithmetic average of all the three Performance Indicator items' percentages.		
Required supporting information	In addition to reporting the Performance Indicator, the Operating Company shall also provide the following supporting information: • Data input values. • Any trends in the figures. • Reasons for any failures and actions taken to prevent reoccurrence.		
Measurement Period	Monthly during Winter Service Period as from Commencement of Service Date 1	**Data Source**	Winter Service Records, as required by Schedule 7 Part 2
Return Format	Percentage	**Decimal places**	0

Performance Indicator 14	
Title	Actual spend against profile
Measure Description	Percentage of total spend on Schemes as a proportion of profiled total spend.
Measure Aim	To measure actual spend at the end of each reporting period against the profiled spend set at the start of the reporting period.
Methodology	The Operating Company shall use the Records of profiled and actual spend recorded in the contract control and management function of the Integrated Roads Information System, as required by Schedule 4 Part 1, to produce the Performance Indicator.
Data input	A = sum of actual spend included in the Statement for all routine/cyclic Schemes, B = sum of profiled spend for all routine/cyclic Schemes, C = sum of actual spend included in the Statement for all Structural maintenance Schemes, D = sum of profiled spend for all structural maintenance Schemes, E = sum of actual spend included in the Statement for all Structures Schemes, F = sum of profiled spend for all Structures Schemes, G = sum of actual spend included in the Statement for all minor improvement Schemes, H = sum of profiled spend for all minor improvement Schemes, I = sum of actual spend included in the Statement for all strategic road safety Schemes, J = sum of profiled spend for all strategic road safety Schemes.
Formula	Performance Indicator for routine and cyclic = (A/B) x 100% Performance Indicator for structural maintenance = (C/D) x 100% Performance Indicator for Structures = (E/F) x 100% Performance Indicator for minor improvements = (G/H) x 100% Performance Indicator for strategic road safety = (I/J) x 100% Reported Performance Indicator = (A+C+E+G+I) / (B+D+F+H+J) x 100%.
Required supporting information	In addition to reporting the Performance Indicator, the Operating Company shall also provide the following supporting information: • Data input values. • Any trends in the figures. • Any significant findings as a result of further analysis of the link/sections Work Code or expenditure type.

Performance Indicator 14			
Measurement Period	Monthly as from Commencement of Service Date 1	**Data Source**	Contract control and management function of the Integrated Roads Information System
Return Format	Percentage	**Decimal places**	0

Performance Indicator No. 15			
Title	Works Contracts cost estimates		
Measure Description	Accuracy of Works Contracts cost estimates.		
Measure Aim	To measure the accuracy of the Operating Company's estimates for Works Contracts.		
Methodology	The Operating Company shall use the Records of pre-tender estimate, awarded tender value and tender return date, recorded in accordance with the requirements of Schedule 6 Part 1, to produce the Performance Indicator. For each Scheme tender the accuracy shall be calculated and the Performance Indicator shall be based on all Scheme tenders completed during the previous 12 months or number of months elapsed after the Commencement of Service Date whichever is the lesser.		
Data input	The following data shall be used: A = pre-tender Scheme estimate for each Scheme, B = tender value for each Scheme, C = number of Schemes tendered in previous 12 months or number of months elapsed after Commencement of Service Date 1 whichever is the lesser.		
Formula	The accuracy for each Scheme tender shall be calculated: Scheme tender accuracy = $(1-(\sqrt{((A-B)^2)}/A) \times 100\%$ Overall Performance Indicator shall be sum of the individual Scheme tender accuracy percentages divided by the number of Scheme tenders completed during the previous 12 months or number of months elapsed after the Commencement of Service Date whichever is the lesser.		
Required supporting information	In addition to reporting the Performance Indicator, the Operating Company shall also provide the following supporting information: • Data input values. • Any trends in the figures.		
Measurement Period	Monthly as from Commencement of Service Date 1	**Data Source**	Records required by Schedule 6 Part 1
Return Format	percentage	**Decimal places**	0

Performance Indicator No. 16			
Title	Works Contracts out turn cost		
Measure Description	Success in delivering Schemes at the awarded tender value.		
Measure Aim	To measure the Operating Company's success in delivering Schemes at the awarded tender value.		
Methodology	The Operating Company shall use the Records of awarded tender value, final value and Scheme Completion Dates recorded in accordance with the requirements of Schedule 6 Part 1 to produce the Performance Indicator. For each Scheme the accuracy shall be calculated and the Performance Indicator shall be based on all Schemes completed during the previous 12 months or number of months elapsed after Commencement of Service Date 1 whichever is the lesser.		
Data input	The following data shall be used: A = awarded tender value for each Scheme, B = final value for each Scheme, C = number of Schemes completed in previous 12 months or number of months elapsed after Commencement of Service Date 1whichever is the lesser.		
Formula	The accuracy for each Scheme shall be calculated: Scheme accuracy = $(1-\sqrt{((A-B)^2)}/A) \times 100\%$ Overall Performance Indicator shall be the sum of the individual Scheme accuracy percentages divided by the number of Schemes completed during the previous 12 months or number of months elapsed after Commencement of Service Date 1 whichever is the lesser.		
Required supporting information	In addition to reporting the Performance Indicator, the Operating Company shall also provide the following supporting information: • Data input values. • Any trends in the figures.		
Measurement Period	Monthly as from Commencement of Service Date 1	**Data Source**	Records required by Schedule 6 Part 1
Return Format	percentage	**Decimal places**	0

Performance Indicator No. 17	
Title	Closure of Non-Conformances (NCR)
Measure Description	Percentage of Non-Conformances closed out within required timescale.
Measure Aim	To measure the Operating Company's performance in the closure of Non-Conformances.
Methodology	The Operating Company shall use the details recorded in a register, as required by Schedule 5 Part 1, of all Non-Conformances, corrections and corrective actions on Non-Conformances raised to produce the Performance Indicator. The Performance Indicator shall be measured monthly using the Records of the previous 6 months or number of months elapsed after Commencement of Service Date 1 whichever is the lesser.
Data input	A = total number of Performance Audit Group NCR corrections due for closure during the reporting period, B = total number of Performance Audit Group NCR corrections closed on time during the reporting period, C = total number of Performance Audit Group NCR corrective actions due for closure during the reporting period, D = total number of Performance Audit Group NCR corrective actions closed on time during the reporting period, E = total number of Operating Company NCR corrections due for closure during the reporting period, F = total number of Operating Company NCR corrections closed on time during the reporting period, G = total number of Operating Company NCR corrective actions due for closure during the reporting period, H = total number of Operating Company NCR corrective actions closed on time during the reporting period.
Formula	Performance Indicator for Performance Audit Group corrections = {(B/A) sum latest 6 months* data} x 100% Performance Indicator for Performance Audit Group corrective actions = {(D/C) sum latest 6 months* data} x 100% Performance Indicator for Operating Company corrections = {(F/E) sum latest 6 months* data} x 100% Performance Indicator for Operating Company corrective actions = {(H/G) sum latest 6 months* data} x 100% Reported Performance Indicator = {(B+D+F+H) / (A+C+E+G) sum 6 months* data} x 100% *or number of months elapsed after Commencement of Service Date 1 whichever is the lesser

Performance Indicator No. 17			
Required supporting information	In addition to reporting the Performance Indicator, the Operating Company shall also provide the following supporting information: • Data input values. • Any trends in the figures. • Reasons for any failures and actions taken to prevent reoccurrence.		
Measurement Period	Monthly (on a rolling 6 month data set) as from Commencement of Service Date 1	**Data Source**	Non-Conformance register, as required by Schedule 5 Part 1
Return Format	Percentage	**Decimal places**	0

Performance Indicator No. 18			
Title	Submission of monthly reports and submissions.		
Measure Description	Percentage of monthly reports and submissions listed in Table 5.3.A.1 in Schedule 5 Part 3, Annex 5.3/A that are submitted within the required timescales.		
Measure Aim	To measure the Operating Company's performance in the submission of the monthly reports and submissions.		
Methodology	The Operating Company shall use the Records necessary to produce all reports and submissions required by Table 5.3.A.1 to produce the Performance Indicator.		
Data input	A = total number of monthly reports and submissions due during the month, B = total number of monthly reports and submissions, submitted as required during the month.		
Formula	Performance Indicator = B/A x 100%		
Required supporting information	In addition to reporting the Performance Indicator, the Operating Company shall also provide the following supporting information: • Data input values. • Any trends in the figures. • Reasons for any failures and actions taken to prevent reoccurrence.		
Measurement Period	Monthly as from Commencement of Service Date 1	**Data Source**	Records necessary to produce all reports and submissions required by Table 5.3.A.1
Return Format	Percentage	**Decimal places**	0

Performance Indicator No. 19			
Title	Planning applications		
Measure Description	Percentage of planning applications processed within the required timescale.		
Measure Aim	To measure the Operating Company's performance in the delivery of the delegated function of the roads authority by processing planning applications received from Planning Authorities effectively and within the required timescale.		
Methodology	The Operating Company shall use the register, as required by Schedule 8 Part 2, of all planning applications received and returned to produce the Performance Indicator. The Performance Indicator shall be based the total number of planning applications due for return during the reporting period, excluding those that require transportation assessments.		
Data input	A = total number of planning applications due for return during the reporting period, B = total number of planning applications due for return during the reporting period that are processed within the required timescale.		
Formula	Performance Indicator = (B / A) x 100%		
Required supporting information	In addition to reporting the Performance Indicator, the Operating Company shall also provide the following supporting information: • Data input values. • Any trends in the figures. • Lists of all late and overdue deliverables and analysis of their reasons.		
Measurement Period	Monthly as from Commencement of Service Date 1	**Data Source**	Planning Applications register, as required by Schedule 8 Part 2
Return Format	Percentage	**Decimal places**	0

Performance Indicator No. 20			
Title	Communications response		
Measure Description	Percentage of communications processed by the Operating Company within the required timescale.		
Measure Aim	To measure the Operating Company's performance in dealing with the correspondence.		
Methodology	The Operating Company shall use the register, as required by Schedule 3 Part 5, of communications received to produce the Performance Indicator. The Performance Indicator shall be based on the total number of items due a response during the reporting period. The Performance Indicator shall be based on a rolling 12 month average.		
Data input	A = total number of communications due a response during the reporting period, B = total number of communications responded to on time during the reporting period, C = total number of requests from the Director or written responses and briefings due for a response during the reporting period, D = total number of responses to requests from the Director for written responses and briefings provided to Transport Scotland within the required timescale during the reported period.		
Formula	Performance Indicator = (B+D) / (A+C) x 100%		
Required supporting information	In addition to reporting the Performance Indicator, the Operating Company shall also provide the following supporting information: • Data input values. • Any trends in the figures. • Lists of all late and overdue deliverables and analysis of their reasons.		
Measurement Period	Monthly as from Commencement of Service Date 1	**Data Source**	Operating Company's register, as required by Schedule 3 Part 5
Return Format	Percentage	**Decimal places**	0

Performance Indicator No. 21			
Title	Carbon emissions		
Measure Description	Annual carbon emissions.		
Measure Aim	To measure the Operating Company's performance within the Unit in reducing its carbon emissions.		
Methodology	The Operating Company shall use the Records compiled in the Carbon Management System (CMS) as required by Schedule 5 Part 8 to produce the Performance Indicator.		
Data input	N = annual carbon emissions (tonnes) produced by the Operating Company as recorded by the Carbon Management System.		
Formula	Performance Indicator (second year onwards) = N (current year) / N (benchmark figure agreed after first Annual Period following Commencement of Service Date 2) x 100%		
Required supporting information	In addition to reporting the Performance Indicator, the Operating Company shall also provide the following supporting information: • Data input values. • Any trends in the figures.		
Measurement Period	Annually as from Commencement of Service Date 2	**Data Source**	Carbon Management System
Return Format	Percentage	**Decimal places**	0

Performance Indicator No. 22			
Title	Maintenance of grassed areas		
Measure Description	Percentage of grassed area maintained in accordance with the Scottish Ministers' Requirements.		
Measure Aim	To measure the Operating Company's performance in complying with the Scottish Ministers' Requirements for maintenance of grassed areas		
Methodology	The Operating Company shall use the results of Operating Company's Audit Inspections to produce the Performance Indicator		
Data input	A = Total number of grass heights measured and visual inspections made where the Scottish Ministers' Requirements are met. B = Total number of grass heights measured and visual inspections made.		
Formula	(A/B x 100)%		
Required supporting information	• Data input values • Any trends in the figures • Lists of all grass heights measured and visual inspections made where the Scottish Ministers' Requirements are not met and analysis of the reasons		
Measurement Period	Monthly (growing period) as from Commencement of Service Date 1	**Data Source**	Records of Operating Company's Audit Inspections
Return Format	Percentage	**Decimal places**	1

Performance Indicator No. 23a			
Title	Recording Inventory Condition Rating		
Measure Description	The percentage of all inventory condition ratings that are recorded within the required timescales excluding the Principal Crossings.		
Measure Aim	To measure the Operating Company's performance in undertaking the recording of all inventory condition ratings.		
Methodology	The Operating Company shall use the records in the routine maintenance and management function of the Integrated Roads Information System of the actual dates that each inventory condition rating is recorded in the system to produce the Performance Indicator.		
Data input	A = is the point in time to calculate the Performance Indicator i.e. to report the Performance Indicator for the end of the Annual Period 2015 to 2016 use 31 May 2016, B = total number of inventory items for the inventory types that are defined in the *Transport Scotland Condition Manual* as requiring condition assessment, C = total number of inventory items for the inventory types that are defined in the *Transport Scotland Condition Manual* as requiring condition assessment where either Commencement of Service Date 1 or the latest condition rating record prior to A is less than or equal to 1 year before A.		
Formula	(C/B) x 100%		
Required supporting information	• Data input values. • Any trends in the figures. • Lists of all late or overdue condition ratings and analysis of their reasons.		
Measurement Period	Monthly as from Commencement of Service Date 1	**Data Source**	Routine maintenance and management function of the Integrated Roads Information System.
Return Format	Percentage	**Decimal places**	0

Performance Indicator No. 23b			
Title	Recording Inventory Condition Rating – Forth Road Bridge		
Measure Description	The percentage of all inventory condition ratings that are recorded within the required timescales for the Forth Road Bridge.		
Measure Aim	To measure the Operating Company's performance in undertaking the recording of all inventory condition ratings.		
Methodology	The Operating Company shall use the records in the routine maintenance and management function of the Integrated Roads Information system of the actual dates that each inventory condition rating is recorded in the system to produce the Performance Indicator.		
Data input	A = is the point in time to calculate the Performance Indicator i.e. to report the Performance Indicator for the end of the Annual Period 2015 to 2016 use 31 May 2016, B = total number of inventory items for the inventory types that are defined in the *Forth Road Bridge Engineering Manual a*s requiring condition assessment, C = total number of inventory items for the inventory types that are defined in the *Transport Scotland Condition Manual* as requiring condition assessment where either Commencement of Service Date 1 or the latest condition rating record prior to A is less than or equal to 1 year before A.		
Formula	(C/B) x 100%		
Required supporting information	• Data input values. • Any trends in the figures. • Lists of all late or overdue condition ratings and analysis of their reasons.		
Measurement Period	Monthly as from Commencement of Service Date 1	**Data Source**	Routine maintenance and management function of the Integrated Roads Information System.
Return Format	Percentage	**Decimal places**	0

Performance Indicator No. 23c			
Title	Recording Inventory Condition Rating – Queensferry Crossing		
Measure Description	The percentage of all inventory condition ratings that are recorded within the required timescales for the Queensferry Crossing.		
Measure Aim	To measure the Operating Company's performance in undertaking the recording of all inventory condition ratings.		
Methodology	The Operating Company shall use the records in the routine maintenance and management function of the Integrated Roads Information System of the actual dates that each inventory condition rating is recorded in the system to produce the Performance Indicator.		
Data input	A = is the point in time to calculate the Performance Indicator i.e. to report the Performance Indicator for the end of the Annual Period 2015 to 2016 use 31 May 2016, B = total number of inventory items for the inventory types that are defined in the *Queensferry Crossing Inspection and Maintenance Manual* as requiring condition assessment, C = total number of inventory items for the inventory types that are defined in the *Transport Scotland Condition Manual* as requiring condition assessment where either Commencement of Service Date 2 or the latest condition rating record prior to A is less than or equal to 1 year before A.		
Formula	(C/B) x 100%		
Required supporting information	• Data input values. • Any trends in the figures. • Lists of all late or overdue condition ratings and analysis of their reasons.		
Measurement Period	Monthly as from Commencement of Service Date 2	**Data Source**	Routine maintenance and management function of the Integrated Roads Information System.
Return Format	Percentage	**Decimal places**	0

Performance Indicator No. 24	
Title	Community Engagements and Community Benefits
Measure Description	The percentage of all opportunities created, visits and tours undertaken and meetings attended during the reporting period.
Measure Aim	To measure the Operating Company's performance in engaging with communities.
Methodology	The Operating Company shall use its records to produce the Performance Indicator.
Data input	A = number of opportunities offered to young people within the Unit in accordance with the Scottish Government's *Creating Opportunities Together* document, B = total number of opportunities scheduled to be offered to young people within the Unit during the reporting period, C = number of Work Clubs supported within the Unit or adjacent to the Unit, in accordance with the UK Government's *Get Britain Working* policy, D = total number of Work Clubs programmed to be supported within the Unit or adjacent to the Unit during the reporting period, E = number of sponsorships offered to high schools within or adjacent to the Unit, F = total number of sponsorships programmed to be offered to high schools within or adjacent to the Unit during the reporting period, G = number of visits undertaken to primary and secondary schools within or adjacent to the Unit to make presentations regarding Operating Company's role and work, H = total number of programmed visits to primary and secondary schools within or adjacent to the Unit to make presentations regarding Operating Company's role and work programmed during the reporting period, I = number of tours to the Forth Road Bridge offered to engineering students from Universities listed in Schedule 3 Part 11, J = total number of tours to the Forth Road Bridge programmed to be offered to engineering students from Universities listed in Schedule 3 Part 11, during the reporting period, K = number of industry related lectures, mentoring and public speaking engagements, L = total number of industry related lectures, mentoring and public speaking engagements programmed during the reporting period, M = number of local charities supported by the Operating Company, N = total number of local charities programmed to be supported by the Operating Company during the reporting period, O = number of tours of the Principal Crossings offered for auction at charity fundraising events,

Performance Indicator No. 24			
	P = total number of tours of the Principal Crossings offered for auction at charity fundraising events during the reporting period, Q = number of attended dialogue, feedback and consultation events related to the major works affecting bridge users and in accordance with the Operating Company's communication plan required in Schedule 3 Part 5, R = total number of programmed dialogue, feedback and consultation events related to the major works affecting bridge users and in accordance with the Operating Company's communication plan required in Schedule 3 Part 5 during the reporting period, S = number of attended liaison meetings with Councillors from Fife, City of Edinburgh, West Lothian Councils and any other Councils who become members of the Forth Bridges Forum, T = total number of liaison meetings with Councillors from Fife, City of Edinburgh, West Lothian Councils and any other Councils who become members of the Forth Bridges Forum programmed during the reporting period, U = number of attended liaison meetings with Queensferry and District Community Council, V = total number of liaison meetings with Queensferry and District Community Council programmed during the reporting period, W = number of attended liaison meetings with North Queensferry, Inverkeithing, Rosyth and Newton Community Councils, X = total number of liaison meetings with North Queensferry, Inverkeithing, Rosyth and Newton Community Councils programmed during the reporting period.		
Formula	((A+C+E+G+I+K+M+O+Q+S+U+W)/(B+D+F+H+J+L+N+P+R+T+V+X)) x100%		
Required supporting information	In addition to reporting the Performance Indicator, the Operating Company shall also provide the following supporting information: • Data input values. • Any trends in the figures.		
Measurement Period	Monthly as from Commencement of Service Date 1	**Data Source**	Operating Company Records
Return Format	Percentage	**Decimal places**	0

Performance Indicator No. 25			
Title	Production and Distribution of the Queensferry Crossing Structural Health Monitoring System Data Reports		
Measure Description	The percentage of all Structural Health Monitoring System reports that are correctly produced and distributed to the stated recipients within the reporting interval.		
Measure Aim	To measure the Operating Company's performance in undertaking the production and promulgation of the agreed standard health monitoring reports.		
Methodology	The Operating Company shall produce reports based on outputs from the Structural Health Monitoring System and send to the recipients identified for each report type.		
Data input	A = the number of instances where the report is compliant with the reporting content requirements and has been received by the nominated recipients within the required reporting interval, B = the number of instances where the report is not compliant with the reporting content requirements or has not been received by the nominated recipients within the required reporting interval,		
Formula	(A/(A+B)) x 100%		
Required supporting information	In addition to reporting the Performance Indicator, the Operating Company shall also provide the following supporting information: • Data input values. • Any trends in the figures. • Lists of all data losses and analysis of their reasons.		
Measurement Period	Annual as from Commencement of Service Date 2	**Data Source**	Queensferry Crossing Structural Health Monitoring System. Operating Company's Structural Health Monitoring System issued reports register. Structural Health Monitoring System report content specifications that include: • reporting intervals, and • list of recipients for each report type
Return Format	Percentage	**Decimal places**	1

Performance Indicator No. 26			
Title	Queensferry Crossing Supervisory Control And Data Acquisition System Maintenance		
Measure Description	Percentage of Supervisory Control And Data Acquisition System maintenance activities carried out within the required timescales on the Queensferry Crossing.		
Measure Aim	To measure the Operating Company's performance in carrying out maintenance of the Queensferry Crossing Supervisory Control And Data Acquisition System and the subsystems and monitored parts that it reports on or controls.		
Methodology	The Operating Company shall use the Records of the Supervisory Control and Data Acquisition parts with maintenance activities due and the number of Supervisory Control and Data Acquisition System parts with maintenance activities completed in the structures management function of the Integrated Roads Information System to produce the Performance Indicator.		
Data input	A = total number of maintenance actions programmed to be completed by the end of the current reporting period, B = total number of maintenance actions completed by the end of the current reporting period,		
Formula	Performance Indicator = (B) / (A) x 100%		
Required supporting information	In addition to reporting the Performance Indicator, the Operating Company shall also provide the following supporting information: • Data input values. • Any trends in the figures. • Lists of all late or overdue activities, analysis of their reasons.		
Measurement Period	Monthly as from Commencement of Service Date 2	**Data Source**	Operating Company Records
Return Format	Percentage	**Decimal places**	0

Performance Indicator No. 27a			
Title	Access Systems inspections – Forth Road Bridge		
Measure Description	Percentage of inspections on Access Systems and reports carried out on Forth Road Bridge and to agreed programme.		
Measure Aim	Measure the Operating Company's performance in carrying out inspections on Access Systems on Forth Road Bridge to programme.		
Methodology	The Operating Company shall follow the inspection frequencies set out in the maintenance manuals appropriate to each Access Systems.		
Data input	A = total cumulative number of inspection reports of all types programmed to be completed by the end of current reporting period, B = total cumulative number of inspection reports of all types completed at the end of current reporting period. Access Systems inspection Records.		
Formula	Reported Performance Indicator = (B/A) x 100%		
Required supporting information	In addition to reporting the Performance Indicator, the Operating Company shall also provide the following supporting information: • Data input values. • Any trends in the figures. • Lists of all late and overdue activities and analysis of their reasons.		
Measurement Period	Monthly as from Commencement of Service Date 1	**Data Source**	Operating Company Records
Return Format	Percentage	**Decimal places**	0

Performance Indicator No. 27b			
Title	Access Systems maintenance – Forth Road Bridge		
Measure Description	Percentage of Access Systems maintenance activities and testing carried out on Forth Road Bridge and within the required timescales and equipment availability.		
Measure Aim	To measure the Operating Company's performance in carrying out Access Systems maintenance and testing on Forth Road Bridge.		
Methodology	The Operating Company shall use the Operating Company's maintenance Records and the replacement frequencies set out in the maintenance manuals appropriate to each Access Systems produce the Performance Indicator.		
Data input	A = total cumulative number of maintenance activities programmed to be completed by the end of the current reporting period, B = total cumulative number of maintenance activities completed by the end of the current reporting period. C = The reporting period x no. of items of Access Systems. D = total summed time for which single items of Access Systems (defined as a platform or gantry) are unavailable or cannot be used for any reason that is connected with maintenance or testing, including planned maintenance or lapse of certification.		
Formula	Performance Indicator = [(B / A) + (C / D)] / 2 x 100%		
Required supporting information	In addition to reporting the Performance Indicator, the Operating Company shall also provide the following supporting information: • Data input values. • Any trends in the figures. • Lists of all late and overdue activities and analysis of their reasons.		
Measurement Period	Monthly as from Commencement of Service Date 1	**Data Source**	Operating Company Records
Return Format	Percentage	**Decimal places**	0

Appendix 27/A – Summary of Access Systems on the Forth Road Bridge

Underdeck mobile platforms (gantries) – all types - and ancillary access equipment
Main cable gantries – all types
Tower cradles – all types
Inter-walkway truss access decking system
Tower lifts
Hanger Access Cradles

Performance Indicator No. 28a			
Title	Access Systems inspections – Queensferry Crossing		
Measure Description	Percentage of inspections on Access Systems and reports carried out on Queensferry Crossing and to agreed programme.		
Measure Aim	Measure the Operating Company's performance in carrying out Access Systems inspections on the Queensferry Crossing to programme.		
Methodology	The Operating Company shall follow the inspection frequencies set out in the maintenance manuals appropriate to each Access System.		
Data input	A = total cumulative number of inspection reports of all types programmed to be completed by the end of current reporting period, B = total cumulative number of inspection reports of all types completed at the end of current reporting period. Access Systems inspection Records.		
Formula	Reported Performance Indicator = (B/A) x 100%		
Required supporting information	In addition to reporting the Performance Indicator, the Operating Company shall also provide the following supporting information: • Data input values. • Any trends in the figures. • Lists of all late and overdue activities and analysis of their reasons.		
Measurement Period	Monthly as from Commencement of Service Date 2	**Data Source**	Operating Company Records
Return Format	Percentage	**Decimal places**	0

Performance Indicator No. 28b			
Title	Access Systems maintenance – Queensferry Crossing		
Measure Description	Percentage of Access Systems maintenance activities and testing carried out on the Queensferry Crossing and within the required timescales and equipment availability.		
Measure Aim	To measure the Operating Company's performance in carrying out Access Systems maintenance and testing on the Queensferry Crossing.		
Methodology	The Operating Company shall use the Operating Company's maintenance Records and the replacement frequencies set out in the maintenance manuals appropriate to each Access System to produce the Performance Indicator.		
Data input	A = total cumulative number of maintenance activities programmed to be completed by the end of the current reporting period, B = total cumulative number of maintenance activities completed by the end of the current reporting period. C = The reporting period x no. of items of Access Systems D = total summed time for which single items of Access Systems (defined as a platform or gantry) are unavailable or cannot be used for any reason that is connected with maintenance or testing, including planned maintenance or lapse of certification.		
Formula	Performance Indicator = [(B / A) + (C / D)] / 2 x 100%		
Required supporting information	In addition to reporting the Performance Indicator, the Operating Company shall also provide the following supporting information: • Data input values. • Any trends in the figures. • Lists of all late and overdue activities and analysis of their reasons.		
Measurement Period	Monthly as from Commencement of Service Date 2	**Data Source**	Operating Company Records
Return Format	Percentage	**Decimal places**	0

Appendix 28/A – Summary of Access Systems on the Queensferry Crossing

Underdeck mobile platforms (gantries) including runway beams and ancillary access equipment requiring certification
Stay inspection Gantries
Deck shuttles including runway beams
Tower cradles
Tower lifts

Performance Indicator No. 29			
Title	Programmed Special Inspections – Forth Road Bridge		
Measure Description	Percentage of programmed structural Special Inspections and reports carried out on the Forth Road Bridge and to agreed programme.		
Measure Aim	Measure the Operating Company's performance in carrying out programmed structural Special Inspections on the Forth Road Bridge to programme.		
Methodology	The Operating Company shall use its inspection Records and the agreed schedule of programmed Special Inspections to produce the Performance Indicator.		
Data input	A = total cumulative number of structural Special Inspection reports programmed to be completed by the end of current reporting period, B = total cumulative number of structural Special Inspection reports completed at the end of current reporting period.		
Formula	Reported Performance Indicator = (B/A) x 100%		
Required supporting information	In addition to reporting the Performance Indicator, the Operating Company shall also provide the following supporting information: • Data input values. • Any trends in the figures. • Lists of all late and overdue activities and analysis of their reasons.		
Measurement Period	Monthly as from Commencement of Service Date 1	**Data Source**	Operating Company Records Agreed schedule of inspections and their intervals
Return Format	Percentage	**Decimal places**	0

Appendix 29/A - Items Requiring Programmed Special Inspections – Forth Road Bridge

Structural Special Inspections and established monitoring or regular inspections (not covered by Principal Inspection and General Inspection schedules).

Hanger terminations and anchors

Cable band bolt visual inspections

Half-joint inspections

Established monitored Defects

Demag joint inspections

This is Annex 5.6/B to Schedule 5 Part 6 referred to in the foregoing Agreement between Scottish Ministers and Amey LG Limited.

SCOTTISH MINISTERS' REQUIREMENTS

SCHEDULE 5 PART 6

PERFORMANCE MEASUREMENT

ANNEX 5.6/B – Monitoring Indicators

SCOTTISH MINISTERS' REQUIREMENTS

SCHEDULE 5 PART 6

PERFORMANCE MEASUREMENT

ANNEX 5.6/B – Monitoring Indicators

No.	Title	Measure Description	Reporting Period
01	Well lit network	Percentage of lighting points operational on the Unit.	Monthly
02	Network availability	The Lane length availability on the Unit.	Monthly
03	Traffic disruption caused by un-programmed work	The Lane length and duration unavailable on the Unit due to un-programmed work.	Monthly
04	Orders against Budget	Percentage of ordered work against budget.	Monthly
05	Works Contractor Invoice submission	Percentage of Works Contractor invoices submitted to Transport Scotland by the Operating Company within the required timescales.	Monthly
06	Accuracy of Operations cost estimates	Accuracy of Operations cost estimates.	Monthly
07	Disputed items in the Statement	Percentage value of disputed items against the total value of the Statement submitted by the Operating Company.	Monthly
08	Operations Instructions completed on target	Percentage of Operations Instructions completed by the target date.	Monthly
09	Staff turnover	Percentage staff turnover during last 12 months	Monthly
10	Sickness absence	Average number of days lost due to sickness per employee.	Monthly
11	Working hours	Average hours worked per employee in last 12 months.	Monthly
12	Training	Average number of training hours per employee provided in last 12 months.	Monthly

No.	Title	Measure Description	Reporting Period
13	Responses to Observations Resulting from Inspections and Hazard Notices	Percentage of Observations Resulting from Inspections and Hazard Notices responded to within the required timescale.	Monthly
14	Remedial Notices issued	Number of Remedial Notices.	Monthly
15	Innovation	Financial value of innovations introduced by the Operating Company.	Monthly
16	Collaboration	Value of collaborative services provided by Operating Company.	Monthly
17	Sustainability – use of reused, recycled, renewable materials	Percentage of raw materials used sourced from reused, recycled or renewable sources.	Monthly
18	Sustainability – waste generation and management	Percentage of waste materials re-used or recycled.	Monthly
19a	Salt Usage	Total amount of salt used in each Annual Period as a percentage of the amount used in the first Annual Period following Commencement of Service Date 2 (used as benchmark).	Annual
19b	Potassium Acetate Usage	Total amount of potassium acetate used in each Annual Period as a percentage of the amount used in the first Annual Period following Commencement of the Service Date 2 (used as benchmark).	Annual
20	Weather Forecast Accuracy	Percentage of accurate weather forecasts	Monthly
21	Vehicle Recovery Service Response	Percentage of vehicle recovery service responses within the required timescales.	Monthly
22	Queensferry Crossing Structural Health Monitoring System Availability	Percentage of data successfully captured for selected (priority) sensor set	Monthly

Monitoring Indicator 01			
Title	Well lit network		
Measure Description	Percentage of lighting points operational on the Unit.		
Measure Aim	To monitor the number of operational lighting points on the network.		
Methodology	The Operating Company shall use the Record of all non-operational lamps in the routine maintenance and management function of the Integrated Roads Information System to produce the Monitoring Indicator.		
Data input	A = total number of street lighting lamps on the network, B = total number of non-operational street lighting lamps during reporting period, C = total number of sign lamps on the network, D = total number of non-operational sign lamps during reporting period, E = total number of bollard lamps on the network, F = total number of non-operational bollard lamps during reporting period.		
Formula	Monitoring Indicator for street lighting = ((A - B) / A) x100% Monitoring Indicator for lit signs = ((C - D) / C) x 100% Monitoring Indicator for lit bollards = ((E - F) / E) x 100% Reported Monitoring Indicator = ((A+C+E) - (B+D+F)) / (A+C+E) x 100%		
Required supporting information	In addition to reporting the Monitoring Indicator, the Operating Company shall also provide the following supporting information: • Data input values. • Any trends in the figures.		
Measurement Period	Monthly as from Commencement of Service Date 1	**Data Source**	Routine maintenance and management function of the Integrated Roads Information System
Return Format	Percentage	**Decimal places**	1

Monitoring Indicator 02			
Title	Network availability		
Measure Description	The Lane length availability on the Unit.		
Measure Aim	To measure Lane availability in terms of Lane/km/hours.		
Methodology	The Operating Company shall use the Records of traffic management required by Schedule 3 Part 7 to produce the Monitoring Indicator.		
Data input	A = Lane km of available network, B = Lane/km/hours of closures (Sum for all closures).		
Formula	Monitoring Indicator = (B) / (A x 24 x days in reporting period).		
Required supporting information	In addition to reporting the Monitoring Indicator, the Operating Company shall also provide the following supporting information: • Data input values. • Any trends in the figures.		
Measurement Period	Monthly as from Commencement of Service Date 1	**Data Source**	Traffic management Records provided by the Operating Company as required by Schedule 3 Part 7
Return Format	Value	**Decimal places**	0

Monitoring Indicator 03			
Title	Traffic disruption caused by un-programmed work		
Measure Description	The Lane length and duration unavailable on the Unit due to un-programmed work.		
Measure Aim	To measure disruption caused by un-programmed work in terms of Lane/km/hours.		
Methodology	The Operating Company shall use the Records of traffic management required by Schedule 3 Part 7 to produce the Monitoring Indicator.		
Data input	A = length of un-programmed Lane closed in km, B = duration of closure in hours.		
Formula	Monitoring Indicator = A x B		
Required supporting information	In addition to reporting the Monitoring Indicator, the Operating Company shall also provide the following supporting information: • Data input values. • Any trends in the figures.		
Measurement Period	Monthly as from Commencement of Service Date 1	**Data Source**	Proposed weekly traffic management programme and traffic management Records provided by the Operating Company as required by Schedule 3 Part 7
Return Format	Value	**Decimal places**	0

Monitoring Indicator 04	
Title	Orders against Budget
Measure Description	Percentage of ordered work against budget.
Measure Aim	To measure value of work ordered for the current Financial Year at the end of each reporting period against the budget for the Financial Year as set at the end of the reporting period.
Methodology	Analysis for each budget heading shall be carried out. The ordered work value shall be calculated by summing the ordered work values for each Scheme as recorded in contract control and management function of the Integrated Roads Information System at the end of each reporting period. The budget value shall be the current Financial Year budget as notified in writing by Transport Scotland. Where budget values are varied during the year, the last notified value shall be used.
Data input	A = sum of ordered work for all routine/cyclic Schemes, B = notified Financial Year budget for routine/cyclic Schemes, C = sum of ordered work for all structural maintenance Schemes, D = notified Financial Year budget for structural maintenance Schemes, E = sum of ordered work for all Structures Schemes, F = notified Financial Year budget for Structures Schemes, G = sum of ordered work for all minor improvement Schemes, H = notified Financial Year budget for minor improvement Schemes, I = sum of ordered work for all strategic road safety Schemes, J = notified Financial Year budget for strategic road safety Schemes.
Formula	Monitoring Indicator for routine and cyclic Schemes = A/B x100% Monitoring Indicator for structural maintenance = C/D x100% Monitoring Indicator for Structures = E/F x 100% Monitoring Indicator for minor improvements = G/H x100% Monitoring Indicator for strategic road safety Schemes = I/J x100% Reported Monitoring Indicator = (A+C+E+G+I) / (B+D+F+H+J) x 100%

Monitoring Indicator 04			
Required supporting information	In addition to reporting the Monitoring Indicator, the Operating Company shall also provide the following supporting information: • Data input values. • Any trends in the figures. • Any significant findings as a result of further link/section analysis by Work Code or expenditure type.		
Measurement Period	Monthly as from Commencement of Service Date 1	**Data Source**	Contract control and management function of the Integrated Roads Information System
Return Format	Percentage	**Decimal places**	0

Monitoring Indicator No. 05			
Title	Works Contracts invoice submissions		
Measure Description	Percentage of Works Contractor invoices submitted to Transport Scotland by the Operating Company within the required timescales.		
Measure Aim	To monitor the efficiency of the Operating Company's process for turnaround of Works Contractor invoices enabling Transport Scotland to make payment within contractual timescales.		
Methodology	The Operating Company shall use the Records of the date the invoice is received, the date the invoice is submitted to Transport Scotland or rejected and the due submission date, which is the date the invoice is received plus 14 calendar days, as recorded in accordance with the requirements of Schedule 6 Part 1, to produce the Monitoring Indicator.		
Data input	A = number of Works Contractor invoice submission dates due during the reporting period, B = number of Works Contractor invoices submitted or rejected on time, with submission dates due during the reporting period.		
Formula	Monitoring Indicator = B/A x 100%		
Required supporting information	In addition to reporting the Monitoring Indicator, the Operating Company shall also provide the following supporting information: • Data input values. • Any trends in the figures.		
Measurement Period	Monthly as from Commencement of Service Date 1	**Data Source**	Records required by Schedule 6 Part 1
Return Format	Percentage	**Decimal places**	0

Monitoring Indicator No. 06			
Title	Accuracy of Operation cost estimates		
Measure Description	Accuracy of cost estimates for Operations on Site.		
Measure Aim	Measure the accuracy of the Operating Company's estimates for Operations.		
Methodology	For each Operation on Site the Operating Company shall use the record of the estimate, out turn value and Scheme Completion Date in the contract control and management function of the Integrated Roads Information System to produce the Monitoring Indicator. For each Scheme the quantum accuracy shall be calculated and the Monitoring Indicator based on all Operations completed during the previous 3 months or number of months elapsed after Commencement of Service Date 1 whichever is the lesser.		
Data input	For each Scheme the following data shall be used: A = Site Operation cost estimate, B = Site Operation out turn value.		
Formula	The accuracy for each Scheme shall be calculated: Monitoring Indicator for Scheme = $(1-(\sqrt{(A-B)/A})^2) \times 100\%$ Overall Monitoring Indicator shall be the arithmetical average of accuracy percentages for individual Schemes completed in the previous 3 months or number of months elapsed after Commencement of Service Date 1 whichever is the lesser.		
Required supporting information	In addition to reporting the Monitoring Indicator, the Operating Company shall also provide the following supporting information: • Data input values. • Any trends in the figures.		
Measurement Period	Monthly as from Commencement of Service Date 1	**Data Source**	Contract control and management function of the Integrated Roads Information System
Return Format	Percentage	**Decimal places**	0

Monitoring Indicator No. 07			
Title	Disputed items in Statement		
Measure Description	Percentage value of disputed items against the total value of the Statement submitted by the Operating Company.		
Measure Aim	To measure success in minimising disputed items.		
Methodology	The Operating Company shall use the information in the contract control and management function of the Integrated Roads Information System to produce the Monitoring Indicator.		
Data input	A = total value of the Statement submitted by the Operating Company including disputed items, B = value of disputed items of the Statement submitted by the Operating Company.		
Formula	Monitoring Indicator = B/A x 100%		
Required supporting information	In addition to reporting the Monitoring Indicator, the Operating Company shall also provide the following supporting information: • Data input values. • Any trends in the figures.		
Measurement Period	Monthly as from Commencement of Service Date 1	**Data Source**	Contract control and management function of the Integrated Roads Information System
Return Format	Percentage	**Decimal places**	0

Monitoring Indicator No. 08			
Title	Operations Instructions completed on target		
Measure Description	Percentage of Operations Instructions completed by the target date.		
Measure Aim	To measure success in completing Operations Instructions.		
Methodology	The Operating Company shall use the proposed and actual completion dates for each Operations Instruction in the contract control and management function of the Integrated Roads Information System to produce the Monitoring Indicator.		
Data input	A = number of Operations Instructions programmed for completion during reporting period, B = number of Operations Instructions programmed for completion during reporting period with a valid actual completion date entered.		
Formula	Monitoring Indicator = B/A x 100%		
Required supporting information	In addition to reporting the Monitoring Indicator, the Operating Company shall also provide the following supporting information: • Data input values. • Any trends in the figures.		
Measurement Period	Monthly as from Commencement of Service Date 1	**Data Source**	Contract control and management function of the Integrated Roads Information System
Return Format	Percentage	**Decimal places**	0

Monitoring Indicator No. 09			
Title	Staff turnover		
Measure Description	Percentage staff turnover during last 12 months.		
Measure Aim	To measure staff turnover.		
Methodology	The Operating Company shall use the Records required by Schedule 5 Part 1 of the number of staff directly employed on the Unit leaving and the number of direct employees employed on the Unit during each reporting period to produce the Monitoring Indicator.		
Data input	P = number of direct employees leaving during previous 12 months*, Q = average number of all direct employees during previous 12 months*. * or number of months elapsed after Commencement of Service Date 1 whichever is the lesser.		
Formula	Monitoring Indicator = P/Q x 100%		
Required supporting information	In addition to reporting the Monitoring Indicator, the Operating Company shall also provide the following supporting information: • Data input values. • Any trends in the figures.		
Measurement Period	Monthly as from Commencement of Service Date 1	**Data Source**	Operating Company Records
Return Format	Percentage	**Decimal places**	0

Monitoring Indicator 10			
Title	Sickness absence		
Measure Description	Average number of days lost due to sickness per employee.		
Measure Aim	To record the average number of days lost due to sickness.		
Methodology	The Operating Company shall use the Records required by Schedule 5 Part 1 of the number of sick days taken by direct employees employed on the Unit and the number of direct employees employed on the Unit during each reporting period to produce the Monitoring Indicator.		
Data input	P = sum of working days lost during previous 12 months*, Q = average number of all direct employees during previous 12 months*. * or number of months elapsed after Commencement of Service Date 1 whichever is the lesser.		
Formula	Average days absence per person = P/Q		
Required supporting information	In addition to reporting the Monitoring Indicator, the Operating Company shall also provide the following supporting information: • Data input values. • Any trends in the figures.		
Measurement Period	Monthly as from Commencement of Service Date 1	**Data Source**	Operating Company staff Records
Return Format	Day	**Decimal places**	0

Monitoring Indicator 11			
Title	Working hours		
Measure Description	Average hours worked per employee in last 12 months.		
Measure Aim	To measure the average number of hours worked per employee.		
Methodology	The Operating Company shall use the Records required by Schedule 5 Part 1 of the number of working hours of direct employees employed on the Unit and the number of direct employees employed on the Unit during each reporting period to produce the Monitoring Indicator.		
Data input	P = sum of working hours by all employees during previous 12 months*, Q = average of all direct employees during previous 12 months. * or number of months elapsed after Commencement of Service Date 1 whichever is the lesser.		
Formula	Average working hours per person per week = P/Q/52		
Required supporting information	In addition to reporting the Monitoring Indicator, the Operating Company shall also provide the following supporting information: • Data input values. • Any trends in the figures.		
Measurement Period	Monthly as from Commencement of Service Date 1	**Data Source**	Operating Company Records
Return Format	Hours per week	**Decimal places**	0

Monitoring Indicator 12			
Title	Training		
Measure Description	Average number of training hours per employee provided in last 12 months.		
Measure Aim	To measure the Operating Company's performance in providing training and development to all direct employees.		
Methodology	The Operating Company shall use Records required by Schedule 5 Part 1 of all training undertaken by direct employees employed on the Unit and the total number of direct employees employed on the Unit during each reporting period to produce the Monitoring Indicator.		
Data input	P = sum of all training hours provided during previous 12 months*, Q = average number of all direct staff during previous 12 months*. * or number of months elapsed after Commencement of Service Date 1 whichever is the lesser.		
Formula	Average training hours per person = P/Q		
Required supporting information	In addition to reporting the Monitoring Indicator, the Operating Company shall also provide the following supporting information: • Data input values. • Any trends in the figures.		
Measurement Period	Monthly as from Commencement of Service Date 1	**Data Source**	Operating Company Records
Return Format	Hours	**Decimal places**	0

Monitoring Indicator No. 13			
Title	Observations Resulting from Inspections and Hazard Notice responses		
Measure Description	Percentage of Observations Resulting from Inspections and Hazard Notices responded to within the required timescale.		
Measure Aim	To measure the number of Observations resulting from Inspections and Hazard Notices responded to within the required timescale.		
Methodology	The Operating Company shall use the Records necessary to comply with the requirements of Schedule 7 Part 1, to produce the Monitoring Indicator.		
Data input	A = total number of Observations resulting from Inspections and Hazard Notices (combined) due a response during the reporting period, B = total number of Observations resulting from Inspections and Hazard Notices (combined) due a response during the reporting period and responded to by the required response date.		
Formula	Monitoring Indicator = (B/A) x 100%		
Required supporting information	In addition to reporting the Monitoring Indicator, the Operating Company shall also provide the following supporting information: • Data input values. • Any trends in the figures.		
Measurement Period	Monthly as from Commencement of Service Date 1	**Data Source**	Records necessary to comply with the requirements of Schedule 7 Part 1
Return Format	Percentage	**Decimal places**	0

Monitoring Indicator No. 14			
Title	Remedial Notices		
Measure Description	Number of Remedial Notices.		
Measure Aim	To measure the performance of the Operating Company in dealing with Non-Conformances.		
Methodology	The Operating Company shall use the Records required by Schedule 5 Part 1 of the Remedial Notices issued during each reporting period and any Remedial Notices remaining open from previous periods to produce the Monitoring Indicator.		
Data input	A = Total number of Remedial Notices issued during reporting period. B = Total number of Remedial Notices from previous reporting periods remaining open at the end of the current reporting period.		
Formula	Total number of Remedial Notices issued and still open = A + B		
Required supporting information	In addition to reporting the Monitoring Indicator, the Operating Company shall also provide the following supporting information: • Data input values. • Commentary on any Remedial Notices issued during each reporting period and any Remedial Notices remaining open from previous periods.		
Measurement Period	Monthly as from Commencement of Service Date 1	**Data Source**	Operating Company Records
Return Format	Number	**Decimal places**	0

Monitoring Indicator No. 15			
Title	Innovation		
Measure Description	Financial value of innovations introduced by the Operating Company.		
Measure Aim	To measure the Operating Company's performance in delivering an efficient and effective service whilst minimising costs.		
Methodology	The Operating Company shall use the Records of innovations submitted and accepted by the Director and the agreed financial benefits attributable to each innovation, as referred to in Schedule 1, to calculate the total financial benefit.		
Data input	The financial benefit to Transport Scotland of each introduced innovation.		
Formula	Total financial value to Transport Scotland of benefits of all accepted innovations to date = sum of individual innovation benefit financial values.		
Required supporting information	In addition to reporting the Monitoring Indicator, the Operating Company shall also provide the following supporting information: • Financial benefit for each innovation accepted by the Director.		
Measurement Period	Monthly as from Commencement of Service Date 1	**Data Source**	Operating Company Records
Return Format	Value (£)	**Decimal places**	0

Monitoring Indicator No. 16			
Title	Collaboration		
Measure Description	Value of collaborative services provided by Operating Company.		
Measure Aim	To measure the Operating Company's performance in providing efficiency savings in the provision of public sector services through collaborative agreements.		
Methodology	The Operating Company shall use the Records referred to in Schedule 3 Part 9, to produce the Monitoring Indicator.		
Data input	The financial value of goods and services provided to local authorities through collaboration agreements.		
Formula	Monitoring Indicator = sum of the values of goods and services provided to local authorities through collaboration agreements.		
Required supporting information	In addition to reporting the Monitoring Indicator, the Operating Company shall also provide the following supporting information: • Financial benefit for each of the collaborative agreement.		
Measurement Period	Monthly as from Commencement of Service Date 1	**Data Source**	Operating Company Records
Return Format	Value	**Decimal places**	0

Monitoring Indicator No. 17			
Title	Sustainability – use of reused, recycled, renewable materials		
Measure Description	Percentage of raw materials used sourced from reused, recycled or renewable sources.		
Measure Aim	To encourage sustainability.		
Methodology	The Operating Company shall use the Records required by Schedule 5 Part 8 of the quantities of raw materials used and quantities of raw materials obtained from recycled, reused, renewable or certified sources to produce the Monitoring Indicator.		
Data input	A = total raw materials consumed (tonnes), B = total raw materials from a recycled or reused source (tonnes), C = total raw materials from a renewable or certified source (tonnes).		
Formula	Percentage of raw materials from reused, recycled or renewable sources (tonnes) = (B + C) / A x 100%		
Required supporting information	In addition to reporting the Monitoring Indicator, the Operating Company shall also provide the following supporting information: • Data input values. • Any trends in the figures.		
Measurement Period	Monthly as from Commencement of Service Date 1	**Data Source**	Operating Company Records
Return Format	Percentage	**Decimal places**	0

Monitoring Indicator No. 18			
Title	Sustainability – waste generation and management		
Measure Description	Percentage of waste materials reused or recycled.		
Measure Aim	To measure the amount of waste generated by the Operating Company's Operations.		
Methodology	The Operating Company shall use the Records required by Schedule 5 Part 8 of the quantities of construction and demolition waste created and its destination to produce the Monitoring Indicator.		
Data input	A = total construction and demolition waste reused in Operations (tonnes), B = total construction and demolition waste recycled (tonnes), C = total construction and demolition waste taken to landfill (tonnes).		
Formula	Percentage of waste materials reused or recycled (tonnes). = (A + B) / (A + B + C) x100%		
Required supporting information	In addition to reporting the Monitoring Indicator, the Operating Company shall also provide the following supporting information: • Data input values. • Any trends in the figures.		
Measurement Period	Monthly as from Commencement of Service Date 1	**Data Source**	Operating Company Records
Return Format	Percentage	**Decimal places**	0

Monitoring Indicator No. 19a			
Title	Salt Usage		
Measure Description	Total amount of salt used in each Annual Period as a percentage of the amount used in the Annual Period following Commencement of the Service Date 2 (used as benchmark). Base salt usage to be established and Monitoring Indicator reported annually from the second Annual Period following Commencement of Service Date 2 onwards.		
Measure Aim	To monitor the amount of salt used during the Winter Service Period.		
Methodology	The Operating Company shall use the route cards and the data logging system fitted into the Winter Service vehicles to provide the data to produce this Monitoring Indicator.		
Data input	Total amount of salt used per month in tonnes.		
Formula	Total amount of salt used aggregated for the Annual Period as a percentage of the amount used in the Annual Period following Commencement of Service Date 2.		
Required supporting information	Not applicable.		
Measurement Period	Monthly as from Commencement of Service Date 2	**Data Source**	Operating Company Records & Data Logging System
Return Format	Percentage	**Decimal places**	0

Monitoring Indicator No. 19b			
Title	Potassium Acetate Usage		
Measure Description	Total amount of potassium acetate used in each Annual Period as a percentage of the amount used in the Annual Period following Commencement of Service Date 2 (used as benchmark). Base potassium acetate usage to be established and Monitoring Indicator reported annually from the second Annual Period following Commencement of Service Date 2 onwards.		
Measure Aim	To monitor the amount of potassium acetate used during the Winter Service Period.		
Methodology	The Operating Company shall use the route cards and the data logging system fitted into the Winter Service vehicles to provide the data to produce this Monitoring Indicator.		
Data input	Total amount of potassium acetate used per month in litres.		
Formula	Total amount of potassium acetate used aggregated for the Annual Period as a percentage of the amount used in the first Annual Period following Commencement of Service Date 2.		
Required supporting information	Not applicable.		
Measurement Period	Monthly as from Commencement of Service Date 2	**Data Source**	Operating Company Records & Data Logging System
Return Format	Percentage	**Decimal places**	0

Monitoring Indicator No. 20			
Title	Weather Forecast Accuracy		
Measure Description	Total number of accurate forecasts provided in each month (during the Winter Service Period) as a percentage of the total number of forecasts provided in that same month.		
Measure Aim	To monitor the accuracy of forecasts obtained during the winter season.		
Methodology	The Operating Company shall use data provided by its expert weather forecasting service to produce this Monitoring Indicator.		
Data input	Frost vs. No Frost and No Frost vs. Frost.		
Formula	Number of accurate forecasts during the month/ Total number of forecasts during the month x 100.		
Required supporting information	Not applicable.		
Measurement Period	Monthly as from Commencement of Service Date 1	**Data Source**	Operating Company Records
Return Format	Percentage	**Decimal places**	0

Monitoring Indicator No. 21	
Title	Vehicle Recovery Service Response
Measure Description	Percentage of vehicle recovery service responses within the required timescales.
Measure Aim	To monitor the Operating Company's performance in providing vehicle recovery service on the Forth Road Bridge from Commencement of Service Date 1 and on the Queensferry Crossing from Commencement of Service Date 2.
Methodology	The Operating Company shall use the Records in the management of Incidents function of the Integrated Roads Information System, required by Schedule 7 Part 3, to produce the Monitoring Indicator.
Data input	A = total number of light recovery vehicle responses required during the reporting period, B = total number of light recovery vehicle responses carried out on time during the reporting period, C = total number of heavy recovery vehicle responses required during the reporting period, D = total number of heavy recovery vehicle responses carried out on time during the reporting period.
Formula	Monitoring Indicator for light recovery vehicle response = (B/A) x 100% Monitoring Indicator for heavy recovery vehicle response = (D/C) x 100% Reported Monitoring Indicator N = ((B + D)/(A + C)) x 100%
Required supporting information	In addition to reporting the Monitoring Indicator, the Operating Company shall provide the following supporting information for all Vehicle Recovery Service responses: • Data input values. • Any trends in the figures. • Reasons for any failures and actions taken to prevent recurrence. • Percentage of light recovery vehicle service responses carried out >10 minutes early. • Percentage of light recovery vehicle service responses carried out 10-5 minutes early. • Percentage of light recovery vehicle service responses carried out 5-0 minutes early. • Percentage of light recovery vehicle service responses carried out 0-5 minutes late. • Percentage of light recovery vehicle service responses carried out 5-10 minutes late. • Percentage of light recovery vehicle service responses carried out >10 minutes late.

Monitoring Indicator No. 21			
	• Percentage of heavy recovery vehicle service responses carried out >20 minutes early. • Percentage of heavy recovery vehicle service responses carried out 20-10 minutes early. • Percentage of heavy recovery vehicle service responses carried out 10-0 minutes early. • Percentage of heavy recovery vehicle service responses carried out 0-10 minutes late. • Percentage of heavy recovery vehicle service responses carried out >10 minutes late.		
Measurement Period	Monthly as from Commencement of Service Date 1	**Data Source**	Operating Company Records
Return Format	Percentage	**Decimal places**	0

Monitoring Indicator No. 22			
Title	Queensferry Crossing Structural Health Monitoring System Availability		
Measure Description	Percentage of data successfully captured for selected (priority) sensor set		
Measure Aim	To provide reassurance of reliability and consistency of the system in operation for when rare extreme events occur.		
Methodology	The system shall be configured to measure the availability of a specific data capture subset of the system, whether retained or not.		
Data input	A = the assessment duration, B = the Class A channel time loss (error) (=summed time lost for all channels in Class), C = the number of Class A channels. Lost data volumes calculated by the Operating Company for the measurement period. Priority categorisation list for sensors by channel (high/low importance - Class A/B).		
Formula	(1-(B/(A x C))) x 100%		
Required supporting information	Lost data volumes calculated by the Operating Company for the measurement period.		
Measurement Period	Monthly as from Commencement of Service Date 2	**Data Source**	Queensferry Crossing Structural Health Monitoring System
Return Format	Percentage	**Decimal places**	2

This is Annex 5.6/C to Schedule 5 Part 6 referred to in the foregoing Agreement between Scottish Ministers and Amey LG Limited.

SCOTTISH MINISTERS' REQUIREMENTS

SCHEDULE 5 PART 6

PERFORMANCE MEASUREMENT

ANNEX 5.6/C – Payment Adjustment Factors

SCOTTISH MINISTERS' REQUIREMENTS

SCHEDULE 5 PART 6

PERFORMANCE MEASUREMENT

ANNEX 5.6/C – Payment Adjustment Factors

No.	Applicable item
01	Schedule 7 Part 1 Repair of Category 1 Defects of Value not more than £10,000
02	Schedule 7 Part 3 Incident Response Operations for Incidents of Value not more than £10,000
03	Schedule 7 Part 1 Safety Inspections, Safety Patrols and Night Time Safety Patrols
04	Schedule 7 Part 1 Detailed Inspections
05	Schedule 7 Part 1 Grass Cutting
06	Schedule 7 Part 1 Vehicle Restraint systems
07	Schedule 7 Part 1 Road Traffic Signs

Payment Adjustment Factor No. 1	
Applicable Item	**Schedule 7 Part 1 Repair of Category 1 Defects of Value not more than £10,000**
Measurement description	The percentage of all Category 1 Defect repairs that are carried out within the required timescale.
Measure Aim	To adjust monthly payments to reflect the Operating Company's performance in undertaking the repair of Category 1 Defects.
Methodology	The Operating Company shall use the Records in the routine maintenance and management function of the Integrated Roads Information System of the actual dates and times when the Operating Company was aware of the presence of a Category 1 Defect and the date and time of all temporary and permanent repairs of Category 1 Defects to calculate the Payment Adjustment Factor for the month.
Data input	A = total number of Category 1 Defect temporary repairs due during the month, B = total number of Category 1 Defect temporary repairs repaired on time during the month, C = total number of Category 1 Defect permanent repairs due during the month, D = total number of Category 1 Defect permanent repairs repaired on time during the month.
Formula	Payment Adjustment Factor* = ((B + D) / (A + C)) x 100%

*rounded to nearest whole percentage point

Payment Adjustment Factor No. 2	
Applicable Item	**Schedule 7 Part 3 Incident Response Operations for Incidents of Value not more than £10,000**
Measure Description	Percentage of all Incident Response Operations (excluding the Trunk Road Incident Support Service) that are attended to within the required timescale.
Measure Aim	To measure the Operating Company's performance in undertaking Incident Response Operations (excluding the Trunk Road Incident Support Service) and adjust monthly payments to reflect performance.
Methodology	The Operating Company shall use the Records in the Incident Response register of the actual date and time when the Operating Company was aware of the requirement for all Incident Response Operations and the date and time of all Incident Response Operations to calculate the Payment Adjustment Factor for the month.
Data input	A = total number of Incident Response Operations (including initial, secondary and contingency responses but excluding the Trunk Road Incident Support Service) required during the month, B = total number of Incident Response Operations (including initial, secondary and contingency responses but excluding the Trunk Road Incident Support Service) attended to within the required timescale during the month.
Formula	Payment Adjustment Factor* = (B/A) x 100%

*rounded to nearest whole percentage point

Payment Adjustment Factor No. 3	
Applicable Item	**Schedule 7 Part 1 Safety Inspections, Safety Patrols and Night Time Safety Patrols**
Measure Description	Percentage of days on which link/sections within the Unit are within the required inspection interval for Safety Inspections, Safety Patrols and night time Safety Patrols.
Measure Aim	To adjust monthly payments to reflect the Operating Company's performance in carrying out of Safety Inspections, Safety Patrols and night time Safety Patrols.
Methodology	The Operating Company shall use the Records in the routine maintenance and management function of the Integrated Roads Information System of the actual date and time when the Operating Company carried out Safety Inspections, Safety Patrols and night time Safety Patrols to calculate the Payment Adjustment Factor for the month.
Data input	A = the number of days during the month on which each link/section is compliant with the Specification in respect of Safety Inspections, aggregated for all link/sections recorded in routine maintenance and management function of the Integrated Roads Information System, B = the number of days during the month on which each link/section is not compliant with the Specification in respect of Safety Inspections, aggregated for all link/sections recorded in routine maintenance and management function of the Integrated Roads Information System, C = the number of days during the month on which each link/section is compliant with the Specification in respect of Safety Patrols, aggregated for all link/sections recorded in routine maintenance and management function of the Integrated Roads Information System, D = the number of days during the month on which each link/section is not compliant with the Specification in respect of Safety Patrols, aggregated for all link/sections recorded in routine maintenance and management function of the Integrated Roads Information System, E = the number of days during the month on which each link/section is compliant with the Specification in respect of night time Safety Patrols, aggregated for all link/sections recorded in routine maintenance and management function of the Integrated Roads Information System, F = the number of days during the month on which each link/section is not compliant with the Specification in respect of night time Safety Patrols, aggregated for all link/sections recorded in routine maintenance and management function of the Integrated Roads Information System.
Formula	Payment Adjustment Factor* = ((A + C + E) / (A + B + C + D + E + F)) x 100%

*rounded to nearest whole percentage point

Payment Adjustment Factor No. 4	
Applicable Item	**Schedule 7 Part 1 Detailed Inspections**
Measure Description	Percentage of Detailed Inspections carried out within the required intervals.
Measure Aim	To adjust monthly payments to reflect the Operating Company's performance in carrying out of Detailed Inspections.
Methodology	The Operating Company shall use the Records in the routine maintenance and management function of the Integrated Roads Information System of the actual date and time when the Operating Company carried out Detailed Inspections on each inventory item to calculate the Payment Adjustment Factor for the month.
Data input	A = the number of inventory items where the inspection activity is compliant with the required Detailed Inspection activity interval, aggregated for all inventory items and for all Detailed Inspection activities recorded in routine maintenance and management function of the Integrated Roads Information System at the end of the month, B = the number of inventory items where the inspection activity is not compliant with the required Detailed Inspection activity interval, aggregated for all inventory items and for all Detailed Inspection activities recorded in routine maintenance and management function of the Integrated Roads Information System at the end of the month.
Formula	Payment Adjustment Factor* = ((A) / (A +B)) x 100%

*rounded to nearest whole percentage point

Payment Adjustment Factor No. 5	
Applicable Item	**Schedule 7 Part 1 Grass Cutting**
Measurement description	The percentage of grass asset maintained to the Scottish Ministers' Requirements.
Measure Aim	To adjust monthly payments to reflect the Operating Company's performance in carrying out grass cutting.
Methodology	The Operating Company shall use the results of the Operating Company's Audit Inspections of grass cutting areas and associated Records to calculate the Payment Adjustment Factor for the month.
Data input	A = total number of visual inspections made and records inspected where the Scottish Ministers' Requirements are met, B = total number of visual inspections made and records inspected.
Formula	Payment Adjustment Factor* = (A / B x 100)%

*rounded to nearest whole percentage point

Payment Adjustment Factor No. 06	
Applicable Item	**Schedule 7 Part 1 Vehicle Restraint Systems**
Measurement description	The percentage of tensioned vehicle restraint systems asset maintained within required maintenance interval.
Measure Aim	To adjust monthly payments to reflect the Operating Company's performance in carrying out of maintenance of the tensioned vehicle restraint systems.
Methodology	The Operating Company shall use the Records in the routine maintenance and management function of the Integrated Roads Information System of the actual date and time when the Operating Company carried out maintenance of the tensioned vehicle restraint systems to calculate the Payment Adjustment Factor for the month.
Data input	A = total linear length of tensioned vehicle restraint systems inventory items recorded within the Unit at the end of the month, B = total linear length of tensioned vehicle restraint systems inventory items where the last maintenance action is within the required maintenance interval at the end of the month.
Formula	Payment Adjustment Factor* = (B / A) x 100%

*rounded to nearest whole percentage point

Payment Adjustment Factor No. 07	
Applicable Item	**Schedule 7 Part 1 Road Traffic Signs**
Measurement description	The percentage of road traffic signs maintained within required maintenance interval.
Measure Aim	To measure the Operating Company's carrying out of maintenance of the road traffic signs and adjust monthly payments to reflect performance.
Methodology	The Operating Company shall use the Records in the routine maintenance and management function of the Integrated Roads Information System of the actual date and time when the Operating Company carried out maintenance of the road traffic signs to calculate the Payment Adjustment Factor for the month.
Data input	A = total number of road traffic signs inventory items recorded within the Unit at the end of the month, B = total number of road traffic signs inventory items where the last maintenance action is within the required maintenance interval at the end of the month.
Formula	Payment Adjustment Factor* = (B / A) x 100%

*rounded to nearest whole percentage point

SCOTTISH MINISTERS' REQUIREMENTS

SCHEDULE 5 PART 7

OPERATING COMPANY OFFICES AND DEPOTS

CONTENTS **Page No.**

1.	**OPERATING COMPANY OFFICES AND DEPOTS**	**1**
1.1	Operating Company Central Office and Main Depot	1
1.2	Operating Company's Control Room	3
1.3	Sub-Offices and Depots	4
1.4	Quarries and Tips	5
1.5	Material Stocks	5
1.6	Equipment, materials, plant and spares to be provided by the Scottish Ministers for use by the Operating Company solely for the pursuance of this Contract	6
1.7	Equipment, materials, plant and spares previously owned by FETA which will not be provided by the Scottish Ministers for use by the Operating Company	8
1.8	Other Scottish Ministers' Equipment	9

ANNEX 5.7/A – Details of the Operating Company's Central Office, Depots and Offices **11**

ANNEX 5.7/B – Equipment, materials, plant and spares owned by FETA to be transferred to Scottish Ministers to be provided for use by the Operating Company solely for the pursuance of this Contract **21**

ANNEX 5.7/C – Equipment, materials, plant and spares owned by the Scottish Ministers to be provided for use by the Operating Company solely for the pursuance of this Contract (spares for the Queensferry Crossing to be handed over on Commencement of Service Date 2) **25**

ANNEX 5.7/D – Quarries and Tips **29**

SCOTTISH MINISTERS' REQUIREMENTS

SCHEDULE 5 PART 7

OPERATING COMPANY OFFICES AND DEPOTS

1. OPERATING COMPANY OFFICES AND DEPOTS

1.1 Operating Company Central Office and Main Depot

1.1.1 During Mobilisation Period 1, an interim Operating Company central office shall be established by the Operating Company.

1.1.2 The Central Office and main depot at the existing FETA offices will be made available to the Operating Company at the Premises with effect from Commencement of Service Date 1.

1.1.3 At Commencement of Service Date 1, the Operating Company will relocate to the Premises and will establish the Central Office and main depot.

1.1.4 The Director may, at his discretion, allow the Operating Company a period of time of no more than six months after Commencement of Service Date 1 to fully establish the Central Office and main depot. During which time the Operating Company shall provide alternative, temporary facilities to ensure delivery of service in accordance with the requirements of this Contract.

The Operating Company shall not change the location of the Central Office and main depot without the prior written consent of the Director. An application to change the location of the Premises shall be made by the Operating Company in writing to the Director. This shall contain details of the proposed change. The Director shall consent to or reject in writing any such application within 14 days of receipt.

1.1.5 Within the Central Office, the Operating Company shall provide an office for the exclusive use of the Director's and the Performance Audit Group's staff. This office shall be available during all Normal Working Hours and be accessible through the normal office reception area. This office shall be capable of accommodating up to four people and be provided with furniture and equipment that allows the Director's and the Performance Audit Group's staff to operate efficiently. As a minimum, this office shall:

(i) have a lockable door with keys for the exclusive use of the Director's and the Performance Audit Group's nominated staff,

(ii) have heating, lighting and four power supply points per desk,

(iii) have desks and chairs compliant with the European Union directives for working at computers,

(iv) have a colour laser printer capable of printing A4 and A3 sheets, with wireless technology and connections suitable for a laptop computer using a universal serial bus 2.0 connection and certified under the European Union Energy Star Programme. The printer must be capable of using the HP universal driver,

(v) have a broadband connection to the internet that runs at not less than 4Mb/second and has no download or upload limits with at least one network cable at each desk,

(vi) have a wireless broadband connection to the internet that runs at not less than 4Mb/second and has no download or upload limits. This connection shall be separate from and in addition to the broadband connection referred in (v) above and shall be for use of the Performance Audit Group,

(vii) have a scanner capable of scanning documents up to A3 in size with connections suitable for a laptop computer,

(viii) have a supply of A4 and A3 paper for the printer which is made from 100 percent recycled sources and maintained and replenished by the Operating Company until the Service End Date,

(ix) have a supply of printer consumables for the printer maintained and replenished by the Operating Company until the Service End Date, and

(x) have an A3/A4 photocopier with paper made from 100 percent recycled sources, both of which shall be certified under the European Union Energy Star Programme.

1.1.6 The Operating Company shall provide at least two separate video conferencing facilities at its Central Office and allow the Director and the Performance Audit Group access and use of such video conferencing facilities when required.

1.1.7 The Operating Company shall ensure that the Director's and the Performance Audit Group's staff has full access to welfare facilities within the Central Office including as a minimum toilets, hot water, rest areas and fresh water.

1.1.8 Within the Central Office, the Operating Company shall provide an office for the exclusive use of Traffic Scotland Operations and Infrastructure Service Contractor as a back-up facility. This office shall be capable of accommodating up to two people and be equipped with furniture and have a broadband connection to the internet to the same standard as that for the office of the Director and Performance Audit Group staff. The back-up facility shall be available to Traffic Scotland Operations and Infrastructure Service Contractor at all times.

1.1.9 The Traffic Scotland Operations and Infrastructure Service Contractor shall in addition have a further back-up facility located at one designated desk in the Operating Company’s new control room as referred to in paragraph 1.2. This desk shall only be made available to Traffic Scotland Operations and Infrastructure Service Contractor at such times as it is not being fully utilised by the Operating Company.

1.1.10 Within the Central Office, the Operating Company shall provide an office for the exclusive use of third parties as specified by the Director. The room shall be equipped with furniture and equipment to the same standard as that for the office of the Director and Performance Audit Group staff.

1.1.11 No temporary offices or facilities shall be situated in either the private or public car park adjacent to the Central Office without the permission of the Director.

1.1.12 In the situation where the Central Office cannot be used by the Operating Company, be that due to damage or another reason including as a minimum the termination of

any lease agreement(s) entered into by the Operating Company with the Scottish Ministers, the Operating Company shall relocate to an interim Central Office and maintain all required activities at all times.

1.1.13 The Operating Company shall undertake the internal cleaning of the buildings detailed in Annex 5.7/A paragraphs 3 and 4 of this Part provided by the Operating Company and or the Scottish Ministers to the Operating Company in connection with this Contract. Cleaning shall be undertaken at least once per day including Saturdays, Sundays and public holidays.

1.1.14 The Operating Company shall undertake the internal cleaning, inspection and maintenance of the public toilets in the Unit detailed in Schedule 3 Part 2. Cleaning shall be undertaken at least once per day including Saturdays, Sundays and public holidays and shall include re-stocking of consumable items. Inspections shall be carried out at regular intervals and the public toilets shall remain open for use between 0800 hours and 2000 hours unless otherwise consented by the Director. The public toilets shall remain locked outwith these hours unless otherwise consented by the Director. Maintenance shall include ensuring the effective operation of all electrical, water supply and drainage systems. For the avoidance of doubt this excludes the kitchen area immediately adjacent to the public toilets which will be subject to a separate agreement between Scottish Ministers and a third party.

1.2 Operating Company's Control Room

1.2.1 The location and details of the Operating Company's control room from Commencement of Service Date 2 shall be within the Central Office as referred to in Annex 5.7/A of this Part.

1.2.2 The Operating Company's control room and the bridge control server room for use from Commencement of Service Date 2 will be made available to the Operating Company on Commencement of Service Date 2. Prior to this date the control room and bridge control server room will be fitted out by FCBC. The Operating Company shall complete the fit out of the control room and bridge control server room within 30 days of Commencement of Service Date 2. For the avoidance of doubt, for any period of time from Commencement of Service Date 1 up until the control room and bridge control server room becoming operational, the Operating Company shall be responsible for ensuring an interim control room(s) and bridge control server room(s) is available at all times within the Central Office. Following completion of this transfer, all activities for the entire Unit shall be controlled from the new control room.

1.2.3 The Operating Company shall provide all power, water and other facilities required by FCBC and any other third parties identified by the Scottish Ministers for the installation, fit out and commissioning of the new control room.

1.2.4 The Operating Company's control room at all times shall:

(i) enable the Operating Company to provide a single point of contact for all of its Operations,

(ii) provide an environment which is suitable to support decision making,

(iii) enable the Operating Company to efficiently manage, coordinate and control its Operations,

(iv) enable the Operating Company to coordinate and support working outwith the Unit, including dealing with emergencies, roadworks, Incidents, and winter resilience issues,

(v) operate on a 24 hours a day, seven days a week basis,

(vi) have sufficient, suitable workstations for all staff working at computers,

(vii) enable the Operating Company to access, view and use real-time data from various sources including closed circuit television feeds from the Traffic Scotland website, closed circuit television feeds from the security cameras on the Forth Road Bridge from Commencement of Service Date 1 and additionally on the Queensferry Crossing from Commencement of Service Date 2, weather station closed circuit television, remote monitoring sites, road sensors, the locations of vehicles fitted with a geographical positioning system and weather forecasting service data for Severe Weather and Winter Service Operations, the acoustic monitoring system for the main cables on the Forth Road Bridge, the Structural Health Monitoring System and the Supervisory, Control and Data Acquisition System on the Queensferry Crossing,

(viii) have information and communication technology systems that can access all Records relating to the Trunk Road network as required to support the delivery of Operations, and

(ix) enable the Operating Company to view anemometer wind speed displays from existing anemometers associated with the operation of Structures and the Trunk Road network.

1.3 Sub-Offices and Depots

1.3.1 Details of the Operating Company's sub-offices and depots shall be as referred to in Annex 5.7/A of this Part. This shall include the location and layout of each sub-office and depot, the Operations that shall be executed from each sub-office and depot, and the fleet management and maintenance activities to be undertaken at each sub-office and depot.

1.3.2 A depot and sub-office compound is located on the Unit to the north of Hopetoun Crossroads. The compound contains an unsurfaced area previously used for storage and laying out of materials and a small suite of rooms including offices, welfare facilities and storage. Details are given in Annex 5.7/A of this Part.

1.3.3 A small suite of maintenance facilities is located in the north abutment of the Queensferry Crossing. The facilities include a booster transformer room, air handling unit room, information technology system CCTV room, cable rooms, drainage rooms and welfare areas. Details are given in Annex 5.7/A of this Part. The area of land surrounding the abutment and the rooms in the abutment shall be provided to the Operating Company at Commencement of Service Date 2. The access road and limited associated land severely reduces the possibility of this becoming a storage site for vehicles or bulk materials. Forth Ports will be granted right of servitude along the access road to the radar station by the Scottish Ministers.

1.3.4 A suite of maintenance facilities is located in the south abutment of the Queensferry Crossing, including a booster transformer room, air handling unit room, cable rooms,

drainage rooms, control switch room, Structural Health Monitoring System control room and equipment storage room, a workshop, a large general store, a paint store and welfare facilities. Details are given in Annex 5.7/A of this Part. The abutment and surrounding area will be provided to the Operating Company at Commencement of Service Date 2. The south abutment has limited surrounding ground space and poor vehicular access, negating the potential as a vehicle depot or storage area for bulk materials.

1.3.5 Substations are provided adjacent to both abutments of the Queensferry Crossing. Each substation includes a power intake room for the exclusive use of the electricity supply company together with an LV switch room, an uninterrupted power supplies room, a generator room and a fire suppression system room for the maintenance and operation of the Queensferry Crossing. Details are given in Annex 5.7/A of this Part. The substations will be provided to the Operating Company at Commencement of Service Date 2.

1.3.6 A former boathouse is located on the north shore of the Firth of Forth just to the west of the Forth Road Bridge. The boathouse contains a small suite of rooms, including a workshop, storeroom, office and welfare facilities. Details are given in Annex 5.7/A of this Part.

1.3.7 The Operating Company shall require prior written consent from the Director for:

(i) any change in the location of any sub-office or depot, and

(ii) a change in the Operations to be executed from any sub-office or depot.

The Operating Company shall submit an application in writing to the Director with details of the proposed change. The Director shall consent to or reject in writing any such application within 14 days of receipt.

1.4 Quarries and Tips

1.4.1 No later than 30 days before Commencement of Service Date 1, the Operating Company shall submit to the Director site details and waste types of the quarries and tips which it proposes to use for disposal of construction waste and all other waste in the format given in Annex 5.7/D of this Part.

1.4.2 The Operating Company shall require prior written consent from the Director for any change of the site details or waste types of the quarries and tips. The Operating Company shall submit an application in writing to the Director with details of the proposed change. The Director shall consent to or reject in writing any such application within 14 days of receipt.

1.5 Material Stocks

1.5.1 The Operating Company shall not use or sell materials from its stocks for work which are not connected with this Contract.

1.5.2 The Operating Company shall ensure the safety and security of the materials in its depots.

1.5.3 The Operating Company shall maintain an inventory of the material stocks held at each depot and produce a monthly statement of the quantities of stocks held within the Unit. This monthly statement shall be held at the Central Office.

1.5.4 The Operating Company shall maintain sufficient stock levels to ensure compliance for the replacement of equipment and materials during maintenance Operations in accordance with the Specification.

1.6 Equipment, materials, plant and spares to be provided by the Scottish Ministers for use by the Operating Company solely for the pursuance of this Contract

1.6.1 Equipment, materials, plant and spares owned by FETA will be transferred to the Scottish Ministers at Commencement of Service Date 1. These are located at several locations including but not limited to:

(i) the Premises,

(ii) the Forth Road Bridge storage area at Ferrymuir Gait,

(iii) the boathouse, and

(iv) Unit 5, Forties Campus, Rosyth

1.6.2 An indicative list of equipment, materials, plant and spares owned by FETA to be transferred to Scottish Ministers and made available for use under this Contract is provided in Annex 5.7/B of this Part. For the avoidance of doubt items including demountable gantries, the acoustic emission system and any cable dehumidifiers are considered to be part of the Unit and are not included in the list. No later than 30 days before Commencement of Service Date 1, the Operating Company shall review this list in conjunction with FETA and the Performance Audit Group and provide a report to the Director confirming the details of all equipment, materials, plant and spares owned by FETA to be transferred to Scottish Ministers and recommendations on which items will and will not be made available to the Operating Company by the Scottish Ministers for use under this Contract. The Director will confirm to the Operating Company which items shall be made available by the Scottish Ministers for use under this Contract. This report shall include:

(i) a description of all items,

(ii) details of the quantities of the items,

(iii) the location of the items,

(iv) whether or not the items shall be made available,

(v) the condition of the items, and

(vi) valuation of the items.

1.6.3 An indicative list of all spares for the Queensferry Crossing to be handed over on Commencement of Service Date 2 is provided in Annex 5.7/C of this Part. No later than 30 days after Commencement of Service Date 2, the Operating Company shall review this list and provide a report to the Director confirming the details of all spares which shall be made available to the Operating Company by the Scottish Ministers for use under this Contract. This report shall include:

(i) a description of all items,

(ii) details of the quantities of the items,

(iii) the location of the items,

(iv) the condition of the items, and

(v) valuation of the items.

1.6.4 An indicative list of equipment, materials, plant and spares held by the operating company for an adjoining unit and to be handed over to the Operating Company on Commencement of Service Date 1 is provided in Annex 5.7/C of this Part. No later than 30 days before Commencement of Service Date 1, the Operating Company shall review this list in conjunction with the operating company and the Performance Audit Group and provide a report to the Director confirming the details of all equipment, materials, plant and spares which shall be made available to the Operating Company by the Scottish Ministers for use under this Contract. This report shall include:

(i) a description of all items,

(ii) details of the quantities of the items,

(iii) the location of the items,

(iv) the condition of the items, and

(v) valuation of the items.

1.6.5 The Operating Company shall make arrangements with the operating company for the adjoining unit for the transfer of equipment, materials, plant and spares from the operating company's premises to the Operating Company's depot prior to Commencement of Service Date 1.

1.6.6 The Operating Company shall maintain the inventory of all Scottish Ministers equipment, plant, materials and spares provided to the Operating Company solely for the pursuance of this Contract. This shall contain a description of each item, the quantity, location, condition and valuation of all items and a record of the deployment or use of the items.

1.6.7 The Operating Company shall provide safe and secure storage for all Scottish Ministers equipment, plant, materials and spares provided to the Operating Company to prevent degradation of any item. The Operating Company shall replace at no cost to the Scottish Ministers, any of these items that are stolen, damaged or in need of replacement due to fair wear and tear. The Operating Company shall ensure all items have an appropriate testing and certification regime in place from Commencement of Service Date 1.

1.6.8 On 31 March every year, the Operating Company shall complete a stock take of equipment, materials, plant and spares provided by the Scottish Ministers for use by the Operating Company and provide a report to the Director within 30 days. This report shall include:

(i) a description of all items,

(ii) details of the quantities of the items,

(iii) the location of the items,

(iv) the condition of the items, and

(v) valuation of the items.

1.6.9 At the Termination Date, the Operating Company shall complete a stock take of equipment, materials, plant and spares provided by the Scottish Ministers for use by the Operating Company in conjunction with the incoming operating company and the

Performance Audit Group and provide a report to the Director within 30 days. This report shall include:

(i) a description of all items,

(ii) details of the quantities of the items,

(iii) the location of the items,

(iv) the condition of the items, and

(v) valuation of the items.

Any difference between the valuation at the Termination Date and the sum of the valuations reported in accordance with paragraphs 1.6.2 to 1.6.4 of this Part and the value of any additional items provided by the Scottish Ministers shall be included as a sum due to the Scottish Ministers in the final Statement for the Contract.

1.6.10 The Operating Company shall take possession of:

(i) the items listed in Annex 5.7/B of this Part (as updated in the report prepared under paragraph 1.6.2 of this Part) from Commencement of Service Date 1. The Operating Company shall store, maintain, deploy and return to store or replace all of these items used to execute Operations,

(ii) the items for Queensferry Crossing listed in Annex 5.7/C of this Part (as updated in the report prepared under paragraph 1.6.3 of this Part) from Commencement of Service Date 2. The Operating Company shall store, maintain, deploy and return to store or replace all of these items used to execute Operations, and

(iii) the items from the operating company for the adjoining unit listed in Annex 5.7/C of this Part (as updated in the report prepared under paragraph 1.6.4 of this Part) from Commencement of Service Date 1. The Operating Company shall store, maintain, deploy and return to store all of these items used to execute Operations.

1.6.11 The Operating Company shall regularly update the inventory and provide an updated inventory to the Director when:

(i) a new item of has been provided by Scottish Ministers to the Operating Company solely for use in the pursuance of this Contract, and

(ii) any item that has been stolen or damaged.

1.6.12 The Operating Company shall replace at no cost to the Scottish Ministers any items of equipment, materials, plant and spares provided by the Scottish Ministers for use by the Operating Company which are used to execute Operations.

1.6.13 The Operating Company shall maintain sufficient stock levels of equipment, materials, plant and spares to ensure compliance for the replacement of equipment and materials during maintenance Operations in accordance with the Specification.

1.7 Equipment, materials, plant and spares previously owned by FETA which will not be provided by the Scottish Ministers for use by the Operating Company

1.7.1 No later than 90 days before Commencement of Service Date 1 the Operating Company shall propose a temporary depot which shall be located no more than 9

miles from the Central Office to the Director for written consent. The temporary depot shall be available for use no later than 30 days before Commencement of Service Date 1 and shall remain available for use until 90 days after Commencement of Service Date 1 unless otherwise consented to by the Director.

1.7.2 Subject to an Order, items of equipment, materials, plant and spares owned or previously owned by FETA which shall not be made available to the Operating Company shall be relocated by the Operating Company to the temporary depot.

1.7.3 The Operating Company shall provide safe and secure storage for all FETA and or Scottish Ministers equipment, plant, materials and spares in the temporary depot to prevent degradation of any item. The Operating Company shall replace at no cost to the Scottish Ministers, any of these items that are stolen, lost or damaged.

1.7.4 The Operating Company shall provide the Director or anyone approved by the Director with access to the temporary depot for the purposes of examining, removing or disposing of any items which have not been made available to the Operating Company for use under this Contract.

1.8 Other Scottish Ministers' Equipment

1.8.1 At Commencement of Service Date 2 the Scottish Ministers will take ownership of bespoke kerb moulds and a stock of precast concrete kerbs acquired under the FRC Principal Contract. The Operating Company shall liaise with the Director to arrange delivery of the kerb moulds and precast concrete kerbs to a depot on the Unit.

1.8.2 The Operating Company shall take possession of the bespoke kerb moulds and the stock of precast concrete kerbs and provide safe and secure storage to prevent degradation. The Operating Company shall replace at no cost to the Scottish Ministers, any of these items that are stolen, lost or damaged.

1.8.3 The Operation Company shall regularly inspect and maintain the bespoke kerb moulds in a condition suitable for use.

1.8.4 The Operating Company shall allow contractors and operating companies authorised by the Director access to the storage location to uplift kerbs when notified by the Director.

1.8.5 Subject to an Order the Operating Company shall arrange for re-stocking of the kerbs using the bespoke kerb moulds. The Operating Company shall notify the Director of any damage to the moulds when they are returned.

1.8.6 The Operating Company shall maintain a register of the kerb moulds and precast concrete kerbs which records:

(i) the number and condition of the kerb moulds and location, if not stored at the depot;

(ii) the total number of precast concrete kerbs received and remaining in stock; and

(iii) each time the stock level changes, a record of the number of kerbs uplifted or received, by whom and when.

This is Annex 5.7/A to Schedule 5 Part 7 referred to in the foregoing Agreement between Scottish Ministers and Amey LG Limited.

SCOTTISH MINISTERS' REQUIREMENTS

SCHEDULE 5 PART 7

OPERATING COMPANY OFFICES AND DEPOTS

ANNEX 5.7/A – Details of the Operating Company's Central Office, Depots and Offices

SCOTTISH MINISTERS' REQUIREMENTS

SCHEDULE 5 PART 7

OPERATING COMPANY OFFICES AND DEPOTS

ANNEX 5.7/A – Details of the Operating Company's Central Office, Depots and Offices

1. Details of the Operating Company's Central Office

1.1.1 The Operating Company shall base its Central Office at the Premises at South Queensferry:

Figure 1.1.1/A – Location Plan of the Premises. (Central Office)

COMMERCIALLY SENSITIVE INFORMATION REDACTED

Figure 1.1.1/B – Existing Layout Plan of the Premises (Central Office)

COMMERCIALLY SENSITIVE INFORMATION REDACTED

Figure 1.1.1/C – Location Plan of the Premises (Main Depot)

COMMERCIALLY SENSITIVE INFORMATION REDACTED

Figure 1.1.1/D – Existing Layout Plan of the Premises (Main Depot)

COMMERCIALLY SENSITIVE INFORMATION REDACTED

1.1.2 The Operations and the fleet management and maintenance to be undertaken at the main depot shall be as follows:

- Incident Response Operations
- Resource management
- Minor vehicular servicing and maintenance
- Plant servicing and maintenance
- Vehicular parking/storage – Traffic Management; Winter Maintenance; TRISS; ISU; landscape maintenance
- Minor welding/joinery activities
- Material and equipment stores
- Staff welfare
- Cat 1 defect repairs
- Operational Works Programme delivery
- Traffic Management provision
- Operator Licence base
- Drivers hours checks
- Vehicle defect checks
- Management of six weekly checks

2. Details of the Operating Company's Control Room

2.1.1 The Operating Company shall base its control room at the Premises at South Queensferry:

Figure 2.1.1/A – Location Plan of Control Room within the Central Office (available from Commencement of Service Date 2)

COMMERCIALLY SENSITIVE INFORMATION REDACTED

Figure 2.1.1/B – Layout Plan of Control Room (available from Commencement of Service Date 2)

COMMERCIALLY SENSITIVE INFORMATION REDACTED

Figure 2.1.1/C – Layout Details of Control Room (available from Commencement of Service Date 2)

COMMERCIALLY SENSITIVE INFORMATION REDACTED

2.1.2 The Operations to be undertaken at the control room shall be as follows:

- Incident Management
- SCADA Monitoring
- SHMS Monitoring
- Monitoring of FRB de-humidification, acoustic monitoring, weigh-in-motion and weather stations
- Journey Time Reliability Operations
- Operational resource management/despatch
- Winter maintenance service planning/monitoring
- MART engagement
- Media and correspondence management

3. Primary Depots and Offices (in addition to Central Office and main depot)

3.1.1 The Operating Company's primary depots and offices shall be the Main Depot located in the Premises.

Figure 3.1.1/C – Location Plan of Primary Depot and Office at Hopetoun Compound

COMMERCIALLY SENSITIVE INFORMATION REDACTED

Figure 3.1.1/D – Layout Plan of Primary Depot and Office at Hopetoun Compound

COMMERCIALLY SENSITIVE INFORMATION REDACTED

3.1.2 The Operations and the fleet management and maintenance to be undertaken at each primary depot and office shall be as follows:

- OCCR activities (ref 5.7.9.1)
- Office accommodation for CMT/key staff
- Resource and operational management activities
- Routine, cyclic and planned scheme management/planning
- Design activities.

4. Secondary Depots

4.1.1 The Operating Company's secondary depot(s) shall be as follows:

Figure 4.1.1/A – Location plan of secondary depot at Queensferry Crossing South Abutment

COMMERCIALLY SENSITIVE INFORMATION REDACTED

Figure 4.1.1/B – Layout plan of secondary depot at Queensferry Crossing South Abutment – Ground Floor

COMMERCIALLY SENSITIVE INFORMATION REDACTED

Figure 4.1.1/C – Layout plan of secondary depot at Queensferry Crossing South Abutment – Upper Floor

COMMERCIALLY SENSITIVE INFORMATION REDACTED

Figure 4.1.1/D – Location plan of secondary depot at Queensferry Crossing North Abutment

COMMERCIALLY SENSITIVE INFORMATION REDACTED

Figure 4.1.1/E – Layout plan of secondary depot at Queensferry Crossing North Abutment – Ground Floor

COMMERCIALLY SENSITIVE INFORMATION REDACTED

Figure 4.1.1/F – Layout plan of secondary depot at Queensferry Crossing North Abutment – Upper Floor

COMMERCIALLY SENSITIVE INFORMATION REDACTED

Figure 4.1.1/G – Location plan of secondary depot at North Queensferry Boathouse

COMMERCIALLY SENSITIVE INFORMATION REDACTED

Figure 4.1.1/H – Layout plan of secondary depot at North Queensferry Boathouse

COMMERCIALLY SENSITIVE INFORMATION REDACTED

Figure 4.1.1/I – Location plan of secondary depot at South Queensferry FRB Storage Depot

COMMERCIALLY SENSITIVE INFORMATION REDACTED

Figure 4.1.1/J – Layout plan of secondary depot at South Queensferry FRB Storage Depot

COMMERCIALLY SENSITIVE INFORMATION REDACTED

Figure 4.1.1/K – Location and Layout plan of secondary depot at Rosyth

COMMERCIALLY SENSITIVE INFORMATION REDACTED

4.1.2 The Operations and the fleet management and maintenance to be undertaken at each secondary depot and office shall be as follows:

- Rosyth
    - Route Team Base (prior to Commencement of Service Date 2
    - Winter Maintenance services
    - Minor welding activities
- South Queensferry
    - Access staging and scaffolding testing/certification
- Hopetoun Compound
    - Operative Training
- South Abutment- Queensferry Crossing
    - Bridge Inspections
    - Route Team Base (post Commencement of Service Date 2).

This is Annex 5.7/B to Schedule 5 Part 7 referred to in the foregoing Agreement between Scottish Ministers and Amey LG Limited.

SCOTTISH MINISTERS' REQUIREMENTS

SCHEDULE 5 PART 7

OPERATING COMPANY OFFICES AND DEPOTS

ANNEX 5.7/B – Equipment, materials, plant and spares owned by FETA to be transferred to Scottish Ministers to be provided for use by the Operating Company solely for the pursuance of this Contract

SCOTTISH MINISTERS' REQUIREMENTS

SCHEDULE 5 PART 7

OPERATING COMPANY OFFICES AND DEPOTS

ANNEX 5.7/B – Equipment, materials, plant and spares owned by the FETA to be transferred to Scottish Ministers to be provided for use by the Operating Company solely for the pursuance of this Contract

Note: This list will be expanded and completed by the Operating Company in accordance with paragraph 1.6.2 of this Part.

COMMERCIALLY SENSITIVE INFORMATION REDACTED

Ref.	Item Description	Quantity	Location	Available	Condition	Total Value	Comments

Abbreviations

TBD	To Be Determined
£TBD	valuation sum

Locations

Location 1	FETA Main Depot
Location 2	Rosyth Depot
Location 3	…….

This is Annex 5.7/C to Schedule 5 Part 7 referred to in the foregoing Agreement between Scottish Ministers and Amey LG Limited.

SCOTTISH MINISTERS' REQUIREMENTS

SCHEDULE 5 PART 7

OPERATING COMPANY OFFICES AND DEPOTS

ANNEX 5.7/C – Equipment, materials, plant and spares owned by the Scottish Ministers to be provided for use by the Operating Company solely for the pursuance of this Contract (spares for the Queensferry Crossing to be handed over on Commencement of Service Date 2)

SCOTTISH MINISTERS' REQUIREMENTS

SCHEDULE 5 PART 7

OPERATING COMPANY OFFICES AND DEPOTS

ANNEX 5.7/C – Equipment, materials, plant and spares owned by the Scottish Ministers to be provided for use by the Operating Company solely for the pursuance of this Contract (spares for the Queensferry Crossing to be handed over on Commencement of Service Date 2)

COMMERCIALLY SENSITIVE INFORMATION REDACTED

Item	Number	Location	Comments
Queensferry Crossing Spares			
Equipment, Materials, Plant and Spares from Adjoining Unit			

This is Annex 5.7/D to Schedule 5 Part 7 referred to in the foregoing Agreement between Scottish Ministers and Amey LG Limited.

SCOTTISH MINISTERS' REQUIREMENTS

SCHEDULE 5 PART 7

OPERATING COMPANY OFFICES AND DEPOTS

ANNEX 5.7/D – Quarries and Tips

SCOTTISH MINISTERS' REQUIREMENTS

SCHEDULE 5 PART 7

OPERATING COMPANY OFFICES AND DEPOTS

ANNEX 5.7/D – Quarries and Tips

1. Location and details of all quarries and tips and the like for disposal of construction waste and all other waste.

COMMERCIALLY SENSITIVE INFORMATION REDACTED

Site Details			**Waste Types**	
Site	**Location**	**Operator**	**Special (Hazardous)**	**General (Inert, Metal, Bituminous material, Wood, Plastics, Liquid, Paper**

SCOTTISH MINISTERS' REQUIREMENTS

SCHEDULE 5 PART 8

ENVIRONMENTAL SUSTAINABILITY AND WASTE

CONTENTS **Page No.**

1.	**INTRODUCTION**	**1**
1.1	General Requirements	1
2.	**REQUIREMENTS FOR SUSTAINABILITY**	**1**
2.1	General	1
2.2	The Transport Scotland Carbon Management System	1
2.3	Sustainability Requirements	2
2.4	Site Waste Management Plans	2
2.5	Forth Replacement Crossing Environmental Statement	2
2.6	Data Recording	2
3.	**REPORTS**	**4**
3.1	Requirements	4

ANNEX 5.8/A – Forth Replacement Crossing: Environmental Statement Volume 1, Chapter 23 Schedule of Environmental Commitments at Operation **7**

SCOTTISH MINISTERS' REQUIREMENTS

SCHEDULE 5 PART 8

ENVIRONMENTAL SUSTAINABILITY AND WASTE

1. INTRODUCTION

1.1 General Requirements

1.1.1 The Operating Company shall follow the principles of the Scottish Government's and Transport Scotland's requirements for sustainable development as set out in this Part.

1.1.2 When undertaking any Operations, the Operating Company shall ensure all of its activities support and contribute towards the Scottish Ministers' objectives and targets for carbon reduction.

2. REQUIREMENTS FOR SUSTAINABILITY

2.1 General

2.1.1 The Operating Company shall have documented procedures detailed in the Management System, to enable it to achieve the requirements of this Part through planning and executing all Operations associated with the management and maintenance of the Unit, including as a minimum:

(i) the work of sub-contractors and sub-consultants,

(ii) the collection and reporting of data required by this Part, and

(iii) certification and compliance with statutory requirements including licences, environmental permits, exemptions, waste transfer notes and consignment notes to meet the requirements of this Contract.

2.2 The Transport Scotland Carbon Management System

2.2.1 The Operating Company shall supply and record all data required to meet the requirements for carbon reporting, carbon management and carbon accounting as detailed in the Carbon Management System. The relevant components of the Carbon Management System are:

(i) Carbon Management System Annual Account data template,

(ii) TS Projects Carbon Tool (Data templates for Contractors are incorporated within the tool).

2.2.2 The Operating Company shall comply with the requirements of the Carbon Management System in accordance with the guidance contained within the system as amended by the Director from time to time.

2.2.3 The Director will provide the Operating Company with the relevant components of the Carbon Management System listed in paragraph 2.2.1 of this Part. The Director will notify the Operating Company of any subsequent changes made to the scope of the Carbon Management System and the Operating Company shall implement the changes.

2.3 Sustainability Requirements

2.3.1 For all Works Contracts with an Estimated Bid Value greater than £1,000,000, the Operating Company shall provide a report to the Director on the feasibility of sourcing at least 10% of the materials required for the Scheme from recycled, secondary or re-used sources. When required by the Director, the Operating Company shall include a requirement for such material sourcing within the Works Contract.

2.3.2 The Operating Company is expected to make an application for an award under the *Civil Engineering Environment Quality Assessment and Award Scheme Term Contracts Version* and achieve interim verifications in accordance with the timescales set out in this Part.

Once awarded an interim verification, the Operating Company shall achieve a final verification during the last Annual Period.

2.4 Site Waste Management Plans

2.4.1 The Operating Company, as part of its Design as stated in Schedule 6 Part 4, shall develop a Site Waste Management Plan for all Schemes with an Estimated Bid Value greater than £350,000. The Site Waste Management Plan shall be developed in accordance with current best practice guidance and instructions issued by the Director or any amendments to the *Design Manual for Roads and Bridges*.

The Site Waste Management Plan shall:

(i) provide details of the quantity and type of waste that will be produced for each Scheme and Works Contract,

(ii) provide details of how the waste produced will be minimised, reused, recycled, recovered or otherwise diverted from landfill,

(iii) provide details of how any materials that cannot be reused, recycled or recovered will be disposed of at a legitimate site,

(iv) take account of the Scottish Government's targets for waste reduction and recycling, and

(v) be regularly updated during the construction process to record how all waste is managed.

The Site Waste Management Plan developed as part of the Operating Company's Design shall be completed and implemented by the Operating Company for the relevant Scheme or the Works Contractor for the relevant Works Contract.

2.5 Forth Replacement Crossing Environmental Statement

2.5.1 The Operating Company shall comply with requirements of the *Forth Replacement Crossing: Environmental Statement Volume 1, Chapter 23 Schedule of Environmental Commitments* stated in Annex 5.8/A of this Part where such requirements relate to Operations.

2.6 Data Recording

2.6.1 The Operating Company shall prepare and keep Records for submission to the Director of:

(i) evidence of the levels of materials sourced for Works Contracts with an Estimated Bid Value greater than £1,000,000 that have been obtained from recycled or secondary sources for all Schemes where this requirement has been required by the Director,

(ii) execution of the requirements for carbon reporting, management and accounting detailed in the Carbon Management System,

(iii) Site Waste Management Plans as required in paragraph 2.4.1 of this Part,

(iv) the *Civil Engineering Environment Quality Assessment and Award Scheme Term Contracts Version*,

(v) the total amount of material resources consumed in undertaking its Operations and separately in Works Contracts measured in tonnes per £100,000 of construction value,

(vi) the proportion of total material resources consumed in Operations and separately in Works Contracts which are sourced from recycled, secondary or re-used sources,

(vii) the proportion of total material resources consumed in Operations and separately in Works Contracts which are sourced from renewable or certified sources,

(viii) the total amount of controlled waste produced in Operations and separately in Works Contracts measured in tonnes per £100,000 of construction value, including a breakdown of the individual waste types produced,

(ix) the total amount measured in tonnes per £100,000 of construction value and the proportion of the total amount of controlled waste produced in Operations and separately in Works Contracts that is re-used, recycled and sent for disposal to landfill,

(x) the total amount measured in tonnes per £100,000 of construction value and the proportion of construction and demolition waste produced which is re-used, recycled and sent for disposal to landfill in Operations and separately in Works Contracts,

(xi) the total volume of water consumed in Operations and separately in Works Contracts, and

(xii) the monthly total fuel consumption measured in litres and the monthly total kilometres travelled by the Trunk Road Incident Support Service vehicle.

2.6.2 The Operating Company shall ensure that obligations are included in all Works Contracts to require Works Contractors to prepare and keep the same Records as required by this Part as appropriate.

2.6.3 The Operating Company shall undertake regular documented and recorded reviews to ensure it complies with:

(i) the requirements for implementing and managing the Carbon Management System,

(ii) the requirements for Site Waste Management Plans,

(iii) the collection, recording and reporting of other information required by this Part, and

(iv) the control of all documentation including the identification and traceability of documents, document issues and status. This shall also include the control of documentation recording the relevant environmental licences, permits, exemptions, waste transfer notes, consignment notes and other environmental Records in respect of Operations and Works Contracts.

The outcomes of these reviews shall be recorded by the Operating Company and provided to the Director and the Performance Audit Group when requested.

3. REPORTS

3.1 Requirements

3.1.1 The Operating Company shall provide an annual report on the sustainability aspects of all Operations and Works undertaken during each Annual Period. This report shall be provided to the Director and the Performance Audit Group no later than 25 Working Days after the start of each Annual Period and shall include:

(i) the total carbon emissions recorded in the Carbon Management System Annual Account data templates associated with carrying out the Operations required by this Contract,

(ii) the activities stated in paragraph 2.5.1 of this Part, and

(iii) any other sustainability aspects required by the Director.

3.1.2 The annual report shall contain separate sections including the following information:

(i) the Records detailed in paragraph 3.1.1 of this Part,

(ii) matters subject to any notice from a regulatory body, and

(iii) any other relevant matters that will either be required by the Director or, which in the opinion of the Operating Company, should be brought to the attention of the Director.

3.1.3 The Operating Company shall provide the following reports using the carbon emissions data generated by the contract control and management function of the Integrated Roads Information System as required by Schedule 4 Part 1:

(i) a quarterly and an annual report of carbon emissions associated with material usage and transportation in Schemes using the contract control and management function of the Integrated Roads Information System's carbon conversion factors for individual Schedule of Rates and Prices items within the one year programme.

The annual report of carbon emissions shall be included within the annual report required in paragraph 3.1.1 of this Part.

3.1.4 The Operating Company shall provide a report detailing the total carbon emissions using the carbon emissions data generated from the Carbon Management System Road Infrastructure Projects Tool for each Works Contract. This report shall be provided no later than 25 Working Days following completion of the Works Contract and include a comparison between Statement of Intent (Scheme approval) carbon

emissions estimates of Works as required by Schedule 4 Part 1 and the total carbon emissions recorded in the Carbon Management System Road Infrastructure Projects Tool at the completion of the Works Contract subject to limitation of the Carbon Management System.

This is Annex 5.8/A to Schedule 5 Part 8 referred to in the foregoing Agreement between Scottish Ministers and Amey LG Limited.

SCOTTISH MINISTERS' REQUIREMENTS

SCHEDULE 5 PART 8

ENVIRONMENTAL SUSTAINABILITY AND WASTE

ANNEX 5.8/A – Forth Replacement Crossing: Environmental Statement Volume 1, Chapter 23 Schedule of Environmental Commitments at Operation

SCOTTISH MINISTERS' REQUIREMENTS

SCHEDULE 5 PART 8

ENVIRONMENTAL SUSTAINABILITY AND WASTE

ANNEX 5.8/A – Forth Replacement Crossing: Environmental Statement Volume 1, Chapter 23 Schedule of Environmental Commitments at Operation

All references and details in the extract below taken from the Forth Replacement Crossing Environmental Statement Volume 1 Chapter 23 are to details within the Environmental Statement and not to this Contract.

Mitigation Item	Approximate chainage/location	Timing of Measure	Description
LU2	All agricultural land	Operation	Access to agricultural land and woodland will be maintained during the construction process and post construction in accordance with the requirements of the Bill.
G11	N1-N29 (refer to Figure 8.4a); S1-S14 (refer to Figure 8.4b and 8.4c).	Operation	Ground gas monitoring of confined spaces will be undertaken before entry.
G13	S13 (refer to Figure 8.4a).	Pre-construction/ Construction/ Operation	Groundwater, surface water and soil sampling results from the 2009 GI will be assessed. Surface water and groundwater monitoring will be undertaken during construction. Where necessary, post construction groundwater monitoring will be undertaken.

Mitigation Item	Approximate chainage/location	Timing of Measure	Description
G19	Ch0-350 (Castlandhill Road) Ch0-290 (Ferrytoll Road) Ch0-1050 (temporary access road) Proposed scheme around M9 Junction 1A Ch2000-2500 (Queensferry Junction) Ch3200-4600 (mainline including associated roads and part of the main construction compound). Ch7900-8430 (mainline and associated side roads) Ch8500-8800 (mainline)	Construction/ Operation	Road drainage, detention basins and swales will be lined to protect the surrounding water environment in the locations specified.
G20	Throughout scheme	Construction/ Operation	All detention basins and swales will be lined unless risk assessment during design development indicates that lining is not necessary at specific locations.
W1	Throughout scheme	Construction/ Operation	Best practice guidance including but not limited to the following will be adhered to: SEPA Pollution Prevention Guidelines - PPG01, PPG02, PPG03,PPG04, PPG05, PPG06, PPG07, PPG08, PPG10, PPG13, PPG14, PPG18, PPG20, PPG21, PPG22, and PPG26; CIRIA Guidelines Report 142 Control of Pollution from Highway Drainage Discharges; CIRIA Report 168 Culvert Design Guide; CIRIA C609 Sustainable Drainage Systems; CIRIA C648 Control of Water Pollution from Linear Construction Projects; CIRIA C649 Control of Water Pollution from Linear Construction Projects Site Guide; CIRIA C697 The SUDS Manual;

Mitigation Item	Approximate chainage/location	Timing of Measure	Description
			BS6031:1981 Code of Practice for Earthworks; and Defra Code of Practice for Using Plant Protection Products.
W28	Throughout Scheme	Design/ Construction/ Operation	For each outfall, a treatment train will be provided to maximise pollutant removal. For new sections of road and roads to be upgraded, the treatment train will consist of 3 levels of SUDS in accordance with CIRIA (2007) and approved by SEPA, including filter drains, swales and detention basins.
W29	St Margaret's Marsh (refer to Figure 9.3a)	Design/ Construction/ Operation	The design will maintain the hydrological connectivity of the marsh whilst ensuring that the directional flow of groundwater is not affected (as per mitigation measure G24 in Table 23.2).
W30	Linn Mill Burn (refer to Figure 9.3c)	Design/Construction/ Operation	To mitigate against an increase in flood risk from the carriageway drainage onto lands adjacent to the viaduct abutments, excess runoff will be directed toward areas of detention, and/ or conveyed toward the Firth of Forth without impacting areas of high risk.
W31	Tributary of Niddry Burn, Niddry Burn, Swine Burn, River Almond (refer to Figure 9.3e)	Design/ Construction/ Operation	Where structures or embankments are constructed within the floodplain, compensatory storage will be created by landforming and this will be provided directly adjacent to the watercourse floodplain where practicable.
W32	Swine Burn (refer to Figure 9.3e)	Design/ Construction/ Operation	Two outfalls appropriately positioned with scour protection will be provided. Two treatment trains will be provided. For flood flows in excess of carriageway drainage capacity, detention or conveyance of flood water toward areas of less risk.

Mitigation Item	Approximate chainage/location	Timing of Measure	Description
W33	Swine Burn (refer to Figure 9.3e)	Design/ Construction/ Operation	One new depressed invert culvert and one double-barrel culvert extension will be provided. The culvert will be designed in line with CIRIA 168 guidance and with allowance for freeboard above the 0.5% AEP (200-year return period event) flood level and mammal passage. Regular inspection to ensure the culverts are free from debris is recommended.
W35	Tributary of Swine Burn (refer to Figure 9.3e)	Design/ Construction/ Operation	One treatment train will be provided.
W36	Niddry Burn (refer to Figure 9.3e)	Design/ Construction/ Operation	One treatment train will be provided.
W39	River Almond	Design/ Construction/ Operation	One treatment train will be provided.
W40	Ferry Burn	Design/ Construction/ Operation	One treatment train will be provided.
W42	Firth of Forth (refer to Figure 9.3d)	Design/ Construction	Two land-based treatment trains will be provided. Drainage over intertidal areas on both shores will be taken back to land-based SUDS systems. Drainage on Main Crossing will include droplet-dispersal system to disperse discharge and any road contaminants. Outfalls will be positioned at reasonably regular spacings (15m indicatively) on either side of bridge deck. Enhancement of drainage system along the viaduct to capture flood flows from the 0.5% AEP (200-year return period) event if practicable will be undertaken.

Mitigation Item	Approximate chainage/location	Timing of Measure	Description
W45	Throughout scheme	Operation	Filter drains and filtration devices will be maintained through inspection and weed control, grass cutting, removal of sediment and vegetation build up, annual reinstatement of eroded areas or damaged vegetation and replacement of clogged filter material as required.
W46	Throughout scheme	Operation	Scour protection will be provided at the drainage discharge outfall to protect the banks and bed of the receiving watercourse and to limit erosion.
TE18	Throughout scheme	Scheme design/ Construction/ Operation	Lighting design will be according to BS 5489 and best practice guidance on lighting (e.g. Bat Conservation Trust and Institute of Lighting Engineers, 2007). Where practicable, night time working (undertaken between sunset and sunrise) will be avoided.
TE20	Throughout scheme	Scheme design/ Construction/ Operation	Construction work at watercourses will not prevent the movement of animals along the bank throughout the works period. Watercourse realignments in low gradient areas will be designed to minimise sedimentation and in high gradient areas to minimise erosion. The opportunity to create suitable habitat will be incorporated through the inclusion of meander bends, secondary channels or, riparian zones where appropriate. Where bridging is not practical and culverts are required, their length will be kept to a practical minimum. Where practical, the insertion of each culvert will not alter the gradients markedly from existing conditions so as to avoid altering flow patterns and resulting habitat loss and to avoid excessive siltation or erosion.

Mitigation Item	Approximate chainage/location	Timing of Measure	Description
			Altered flow regimes resulting from the use of culvert extensions or channel realignments will be avoided. Culverts will be oversized to allow natural bed and bank profiles to remain, where practicable. On sites where dewatering is anticipated, the creation of a temporary diversion channel with suitable sized replacement substrate or transplanted substrate from the section being dewatered will be undertaken, making sure that the size and flow in the diversion channel is as near to the existing channel as practicable. Fish will be removed from channels to be dewatered for construction of culverts, realignments or bridges. In salmonid waters, in-channel works and piling will be avoided during sensitive periods for migrating and spawning fish (October-May inclusive). Drainage systems will be designed to prevent otter entering and becoming trapped. There will be no stockpiling of material within 10m of any watercourse. Mammal ledges will be installed in new culverts and will comprise the installation of a ledge of minimum 500mm wide with access to the bank via ramps. Ledges must be a minimum of 150mm above high water levels and allow 600mm headroom. Ledges must take account of the preferred bank used by otters.

Mitigation Item	Approximate chainage/location	Timing of Measure	Description
TE21	Throughout scheme	Operation	Any maintenance works required during the breeding bird season will be subject to the same restrictions as during construction. Mammal proof fencing will be maintained during operation of the proposed scheme. Crossing points for bats will be monitored as part of the operational aftercare management contract to assess whether additional provision will be required. Culverts will be appropriately maintained to ensure continual operation of the asset during operation.
TE22	Throughout scheme	Construction/ Operation	Landscape planting and newly created habitat will be comprised of predominantly native species of local provenance where available, and will comprise a mixture of species. Where loss or degradation of valuable habitat is unavoidable and where watercourses are realigned, they will be returned to their former quality or improved once construction is complete where practicable. Sowing/ planting will be undertaken as soon as possible following completion of the works to reduce the likelihood of the areas being colonised by invasive, non-native species which are of lower value to wildlife. All areas of habitat loss due to temporary works, site compounds, easements, working areas or access roads will be reinstated following construction on a like for like basis. Habitat creation will contribute to biodiversity targets identified in local (LBAP) and national (UKBAP) strategies. During the operation of the proposed scheme, management and maintenance of roadside

Mitigation Item	Approximate chainage/location	Timing of Measure	Description
			verges is to be undertaken to maintain and enhance floral diversity. Appropriate management will be undertaken of existing boundary habitats such as hedgerows or rough edges for the benefit of key farmland species of conservation concern such as yellowhammer (Emberiza citronella), skylark (Alauda arvensis), linnet (Carduelis cannabina), tree sparrow (Passer montanus), meadow pipit (Anthus pratensis) and grey partridge (Perdix perdix). Replacement roosts will be monitored during the aftercare and operation phase of the road in order to identify further roost requirements.
TE23	Throughout scheme	Construction/ Operation	Best practice measures will be implemented to prevent pollution (see mitigation measure W1 in Table 23.3).
TE25	Along existing hedge south of Inchgarvie House. Along the access road north of Queensferry Junction (ch3700-4300) and on the western side of the proposed scheme (ch3600-3900). Along the A904 west of Queensferry Junction and along the minor road southwest of Queensferry Junction. Along the proposed scheme east of Queensferry Junction (ch2500-3500) and alongside the bus links east of ch500. North of Lindsay's Craigs Woodland alongside M9 WB from the M9 Spur Interchange Link to Overton Road (ch1700-2200).	Construction/ Operation	Hedgerow and tree planting will be provided.

Mitigation Item	Approximate chainage/location	Timing of Measure	Description
TE26	Areas of Habitat Creation	Operation	Bankside habitat creation comprising planting and enhancement of detention basins will be undertaken.
TE27	Confidential	Operation	Replacement badger setts will be provided prior to the exclusion of badgers from social group A from their parent sett and population group C for a main and two outlier setts. Where practicable, replacement setts will be created within the same woodland area as the existing setts. Where this is not possible, the alternative site will be located such that a clear path leads to it from an existing sett.
TE31	Niddry Burn	Construction/ Operation	An artificial otter holt will be provided.
TE32	Watercourses	Operation	In order to reduce disturbance of otters, lighting will be sensitively sited to reduce light spill onto burns and where required screens will be provided.
TE34	Swine Burn. Niddry Burn.	Construction/ Operation	Habitat enhancement/ creation will be incorporated through the inclusion of meander bends, secondary channels and riparian zones, where appropriate.
TE38	Scheme drainage including detention ponds	Operation	Detention basins, culverts, filter drains, swales and catchpits will be inspected and maintained as appropriate (refer to Table 23.3).
TE39	Ch3350. Ch2750. East of ch1500 on the A90.	Construction/ Operation	Suitable structures such as temporary fencing during construction and ITS/ ADS gantries during operation will be provided to act as bat bridges.

Mitigation Item	Approximate chainage/location	Timing of Measure	Description
TE40	Ch 3350. Ch 2750. fencing locations.	Construction/ Operation	Temporary mammal-resistant fencing will be provided around construction compounds following a specification agreed in consultation with SNH. Where required, permanent mammal fencing will be erected in accordance with DMRB and SNH guidance 'Otters and Development' (The Highways Agency et al., 1993; Scottish Natural Heritage, Undated). Associated planting will be placed in such a way that animals will be directed towards safe passing places. Where the operational scheme crosses watercourses otter-proof fencing will be installed 150m either side.
TE41	Ch1700-4300.	Construction/ Operation	Badger proof fencing will be provided. Note at certain locations integrated with noise barriers refer to Table 23.6.
TE44	Between ch2500-3100.	Construction/ Operation	A dry mammal passage will be provided.
TE45	Castlandhill Woods. Woodland at St Margaret's Hope. East Shore Wood adjacent to Society Rd (west of Main Crossing). Echline Strip (ch2920).	Construction/ Operation	Bat surveys will be undertaken to determine the species, seasonal and dimensional requirements of replacement roost habitat including provision of bat boxes.

Mitigation Item	Approximate chainage/location	Timing of Measure	Description
TE46	Ch8200-8300 (cemetery)	Construction/ Operation	If required, maiden pink (Dianthus deltoides) to be translocated to a suitable adjacent location. Translocation will be undertaken with necessary permissions under the supervision of an ECoW in accordance with a detailed method statement prepared in advance.
TE51	St. Margaret's Marsh	Construction/ Operation	A management strategy to enhance the site's condition will be implemented in consultation with stakeholders.
EE6	Firth of Forth	Construction/ Operation	Best practice measures will be implemented to prevent pollution (see mitigation measure W1 in Table 23.3).
V1	Throughout scheme	Scheme design/ Construction /Operation	All landscape mitigation in Table 23.6 will be provided.
V2	Throughout scheme	Scheme design/ Construction/ Operation	Where lighting is essential, all reasonable precautions will be undertaken to reduce energy consumption and avoid/ reduce the amount of light pollution of the night sky and rural landscape where this can be achieved safely and effectively.
CH10	Throughout scheme	Construction/ Operation	Planting proposed as part of the landscape/ ecology mitigation measures (refer to Table 23.6 and Figure 12.4) and noise barriers (refer to Table 23.10) will be provided to reduce impacts on setting.
P6	NCR 1 on east side of A90 (path 6); NCR 1 on B981 (path 6a); and NCR 76 at Ferrytoll Junction (path 10). Refer to Figure 17.3a.	Construction/ Operation	New signage will be installed as appropriate for NCR 1 and NCR 76.

Mitigation Item	Approximate chainage/location	Timing of Measure	Description
P7	Ferrytoll Junction - NCR 76 (path 10, 80) North end of Forth Road Bridge (refer to Figure 17.3a). Local path across the proposed Queensferry Junction (path 45b) - refer to Figure 17.3b.	Construction/ Operation	Traffic signals will be provided to enable safe crossing of roads for all NMUs and crossing points will be DDA compliant. Puffin or Toucan crossings will be chosen ahead of Pelican crossings.
P9	NCR1/Local Path (path 6). NCR 76 (path 10) Right of way (path 16) Local paths (21) Core path (23) Core path (38) Local paths (46) Local paths (78) Recreational areas - Ferry Hills and Echline fields	Construction/ Operation	Planting proposed as part of the landscape/ ecology mitigation measures (refer to Table 23.6 and Figure 12.4) will be provided to reduce impact on amenity value.
VT1	Throughout scheme	Scheme design/ Construction /Operation	All landscape mitigation in Table 23.6 will be provided.

signed for and on behalf of The Scottish Ministers

by ……...Roy Brannen…….

on …..…… December 2014……

at ……Glasgow……...……

……..……
Authorised Signatory

signed for and on behalf of AMEY LG Limited

by
……...……

on ……..… December 2014……

at ……Glasgow……..….

……..…
Director/Company Secretary/
Authorised Signatory*

SCOTTISH MINISTERS' REQUIREMENTS

SCHEDULE 6 PART 1

PROCUREMENT AND MANAGEMENT OF SCHEMES

CONTENTS **Page No.**

1.	**INTRODUCTION**	**1**
1.1	General Requirements	1
2.	**SCHEMES EXECUTED AS OPERATIONS**	**1**
2.1	General	1
3.	**SCHEMES PROCURED AS WORKS CONTRACTS**	**2**
3.1	General	2
3.2	Competitively Tendered Contracts	5
3.3	Use of a Scottish Ministers' Framework Contract.	6
3.4	Inviting Tenders	6
4.	**AWARD OF WORKS CONTRACT AND FRAMEWORK ORDER**	**7**
5.	**CONTRACT MANAGEMENT DUTIES**	**7**
5.1	General	7
5.2	Financial Control and Monitoring of Works Contracts	9
5.3	Changes to Works Contracts	10
5.4	Interim Valuations and Final Measurement for Works Contracts	11
5.5	As-Built Records	12

ANNEX 6.1/A – Model for Draft Tender Documents Checklist **13**

ANNEX 6.1/B – Draft Tender Document Certificates **23**

ANNEX 6.1/C – Contract Control Forms **29**

ANNEX 6.1/D – Lane Rental Form **45**

SCOTTISH MINISTERS' REQUIREMENTS

SCHEDULE 6 PART 1

PROCUREMENT AND MANAGEMENT OF SCHEMES

1. INTRODUCTION

1.1 General Requirements

1.1.1 Subject to an Order, the Operating Company shall:

(i) execute Schemes as part of Operations, or

(ii) assist the Director to procure work by means of a competitive tendering procedure, or

(iii) assist the Director to procure work via a Scottish Ministers' framework contract, or

(iv) assist the Director to procure work via any other procedure decided by the Director.

1.1.2 The Operating Company shall include documented procedures in the Management System for delivering the requirements of this Part.

1.1.3 The Operating Company is not permitted to tender for any Works Contracts which are to be executed within the Unit.

1.1.4 The Operating Company shall ensure that the construction phase of all Works Contracts and Schemes is completed no later than 25 Working Days before the Service End Date.

2. SCHEMES EXECUTED AS OPERATIONS

2.1 General

2.1.1 The Operating Company shall establish, document, implement and continually improve its procedures for the issue of Operations Instructions for any Scheme executed as Operations by the Operating Company.

Where a Scheme is to be executed as Operations, no Operations shall commence until all statutory procedures have been completed and the requirements for entry to land have been met including as a minimum:

(i) completion of road orders,

(ii) completion of any traffic regulation orders,

(iii) permissions required from the Scottish Environment Protection Agency including obtaining any licences required by the *Controlled Activities (Scotland) Regulations 2005*,

(iv) the environmental impact assessment,

(v) the environmental statement,

(vi) the publication of the environmental notice, and

(vii) any other regulatory requirement specific to the Scheme.

The completion of the statutory procedures and the requirements for entry to land shall represent an Operating Company's Hold Point in the Quality Plan.

2.1.2 The Quality Plan shall identify the level of supervision for any Scheme to be executed as Operations. When requested by the Director, the Operating Company shall provide proposals for supervisory staff for any Scheme to be executed as Operations. This shall represent a Scottish Ministers' Hold Point in the Quality Plan.

2.1.3 Subject to an Order, the Operating Company shall undertake the supervision and management of Schemes executed as Operations. When undertaking the supervision and management of Schemes executed as Operations, the requirements stated in paragraphs 5.1, 5.2, 5.3, 5.4 and 5.5 of this Part shall be executed as part of the supervision and management requirements.

2.1.4 The Operating Company shall ensure that suitably qualified and experienced employees are available at all times for all Schemes where Operations are in progress.

2.1.5 The Operating Company shall undertake the relevant duties required to fulfil the obligations of the CDM Regulations as stated in Schedule 6 Part 2.

2.1.6 The Operating Company shall maintain Records of all Site activities.

2.1.7 The Operating Company shall undertake the financial management and monitoring of each Scheme undertaken as Operations in accordance with the requirements stated in Schedule 4 Part 1.

2.1.8 The Operating Company shall record the carbon emissions associated with Schemes executed as Operations using the Carbon Management System Road Infrastructure Projects Tool.

3. SCHEMES PROCURED AS WORKS CONTRACTS

3.1 General

3.1.1 Subject to an Order, the Operating Company shall act as the Contract Administrator(s) in accordance with the form of Works Contract used. No later than 30 days prior to Commencement of Service Date 1, the Operating Company shall submit its nominations for such roles to the Director for consent. The Operating Company's nominations shall include the nominees' qualifications and experience related to the role for which they are being proposed.

3.1.2 The Operating Company shall re-submit nominations for these roles:

(i) no later than 25 Working Days prior to the start of the second Annual Period and each subsequent Annual Period,

(ii) whenever a person consented to is unavailable to undertake the role, and

(iii) whenever the Director requests the Operating Company to provide further nominations.

3.1.3 Consent to the nominees for the role of the Contract Administrator(s) shall represent a Scottish Ministers' Hold Point in the Quality Plan. No tender

documents shall be issued until the Director has consented to the use of the nominee and the nominee has been named in the Works Contract. All nominees that have been consented to shall be deemed to be acting on behalf of the Operating Company when acting as the Contract Administrator(s) in accordance with the form of contract used.

3.1.4 For each Works Contract, the Operating Company shall confirm to the Director:

(i) the names of the individuals nominated to act as the Contract Administrator(s) together with the proposed level of supervision, and

(ii) details of other Schemes for which such nominees are responsible.

The Operating Company shall not permit an individual to act as the Contract Administrator(s) for more than one Works Contract during critical activities.

3.1.5 The Director will require Works Contracts to be procured through:

(i) a competitive tendering procedure, or

(ii) a Scottish Ministers' framework contract, or

(iii) any other procedure decided by the Director.

Allowing sufficient time prior to commencing any tender process, the Operating Company shall provide a report to the Director recommending which form of contract is to be used from the Director's library of model contracts as referred to in this Part. This report shall represent a Scottish Ministers' Hold Point in the Quality Plan.

The Director will inform the Operating Company on the procurement method and form of contract that shall be used.

3.1.6 For each Works Contract, the Director will inform the Operating Company of the name and e-mail address of the person to be designated as the sole point of contact for all tender correspondence. The Operating Company shall include such details in the tender documentation for each Works Contract.

3.1.7 When procuring a Works Contract through a competitive tendering procedure, the restricted tendering procedure stated in the *Public Contracts (Scotland) Regulations 2012* (as amended from time to time) shall be used, unless otherwise instructed by the Director.

3.1.8 All Works Contracts shall use:

(i) the current version of the *Manual of Contract Documents for Highway Works,*

(ii) any amendments issued by Transport Scotland to the *Manual of Contract Documents for Highway Works,*

(iii) one of the Director's library of model contract documents, and

(iv) any other requirements stated as part of an Order.

3.1.9 There shall be no departure from the *Manual of Contract Documents for Highway Works* or Transport Scotland's procurement documentation without the prior written consent of the Director.

3.1.10 For each Works Contract, the Director shall inform the Operating Company of the tender assessment criteria to be used for assessing tender submissions. The Operating Company shall include the assessment criteria in the tender documents and, where applicable, in the advertisement for the Works Contract.

3.1.11 Prior to preparation of a contract notice for any Works Contract, the Operating Company shall provide a report to the Director making recommendations on:

(i) the inclusion of a sub-contract clause which requires the Works Contractor to advertise any new subcontracts using the Public Contracts Scotland portal, and

(ii) the inclusion of a clause requiring the Works Contractor to provide Community Benefits and the nature and quantum of such benefits.

3.1.12 At the discretion of the Director and as stated in the relevant Order, the Operating Company shall incorporate within each Works Contract the Director's requirements for a sub-contract clause and a community benefits clause.

3.1.13 The Operating Company shall ensure that all Works Contracts contain provisions for Works Contractors to:

(i) provide the data necessary to complete the Carbon Management System operational data template for projects,

(ii) submit a completed Carbon Management System operational data template for projects to the Operating Company on a weekly basis during the Works Contract,

(iii) submit to the Operating Company the completed Carbon Management System operational data template for projects within five Working Days of the completion of the Works, and

(iv) ensure the Site is restored to a clean and tidy condition with a minimum standard of grade B as stated in the *Code of Practice on Litter and Refuse*.

3.1.14 The Operating Company shall ensure all Works Contracts require the Works Contractor to prepare and provide a detailed quotation covering each change.

3.1.15 During the preparation of Works Contracts, where the Scheme has an Estimated Bid Value greater than £1,000,000, the Operating Company shall provide a report to the Director, in accordance with the requirements of Schedule 5 Part 8, setting out the feasibility of sourcing at least 10 percent of the materials required for the Scheme from recycled, secondary or re-used sources. When required by the Director, the Operating Company shall ensure that Works Contracts, where the Scheme has an Estimated Bid Value greater than £1,000,000, contain provisions requiring Works Contractors to use such material sourcing for the Scheme.

3.1.16 The Operating Company shall ensure that all Works Contracts contain provisions to allow the Director and the Performance Audit Group the right to access the locations of Works or Works Contractor's premises, with or without prior notification. The Operating Company shall provide all assistance

necessary to ensure that access for such visits is available to the Director and the Performance Audit Group.

3.1.17 The Operating Company shall inform the Director immediately should it consider that there are conflicting requirements between the obligations detailed in paragraph 5 of this Part and the form of contract selected for a Works Contract.

3.1.18 The Operating Company shall use a self certification, check and counter signature process to ensure the tender documents required for each Works Contract comply with the Director's requirements.

3.1.19 Prior to the issue of any tender documents and following completion of the Design, the Operating Company shall submit one Electronic Copy of the finalised tender documents including the model checklist provided in Annex 6.1/A of this Part to the Performance Audit Group for review and counter certification.

3.1.20 The Operating Company shall modify the tender documents when required by the Performance Audit Group. When satisfied that any required amendments have been dealt with, the Performance Audit Group will issue the Certificate shown in Annex 6.1/B of this Part. The Operating Company shall remain responsible at all times for the drafting of the tender documents.

3.1.21 The Operating Company shall not proceed further with the procurement process and no tender documents shall be issued until the certification process is complete. This shall represent a Scottish Ministers' Hold Point in the Operating Company's Quality Plan.

3.1.22 No tender documents shall include any contingency sum other than a provisional sum that has been previously consented to by the Director.

3.1.23 Works Contracts with an Estimated Bid Value over £2,000,000 shall be procured using a Works Contract with fixed price lump sum from the Director's library of model contracts, unless otherwise consented to in writing by the Director.

3.2 Competitively Tendered Contracts

3.2.1 The Director's library of model contracts supports the use of lane rental and lane occupation charge procedures and can accommodate varying maintenance periods of one, two or five years. The Works Contractor's responsibilities during the maintenance period can also be varied.

Prior to the preparation of each Works Contract, the Operating Company shall provide a report to the Director making recommendations on:

(i) the suitability of the Works for the use of lane rental charges,

(ii) the length of the maintenance period, and

(iii) the Works Contractor's responsibilities during the maintenance period.

3.2.2 At the discretion of the Director and as stated in the relevant Order, the Operating Company shall incorporate within each Works Contract the Director's requirements for lane rental charges, the length of the maintenance period and the Works Contractor's responsibilities during these periods.

3.2.3 The Operating Company shall:

(i) use the Drawings, specifications and schedules prepared as part of the Design as stated in Schedule 6 Part 4 for the preparation and production of all tender documents to be issued to all tenderers,

(ii) prepare for consent by the Director, a contract notice inviting applicants to apply to be on the tender list. When consented to by the Director, the Operating Company shall place the contract notice on the Public Contracts Scotland advertising portal,

(iii) prepare the Director's pre-qualification document and submit this to the Director for consent. This shall represent a Scottish Ministers' Hold Point in the Quality Plan,

(iv) following consent by the Director, issue the Director's pre-qualification document on the Public Contracts Scotland advertising portal. The Operating Company shall assist the Director in responding to any questions from or clarifications sought by applicants relating to the pre-qualification document,

(v) issue the tender documents,

(vi) provide support to the Director for answering tender questions and providing clarifications within defined timescales, relating to the tender documents, and

(vii) undertake any other activities required by the Director to assist in the procurement of Works.

3.3 Use of a Scottish Ministers' Framework Contract.

3.3.1 The Operating Company shall:

(i) use the Drawings, specifications and schedules prepared as part of the Design as stated in Schedule 6 Part 4 for the preparation and production of tender documents, as required by the Scottish Ministers' framework contract, to enable the Director to determine the most suitable framework contractor for the Scheme,

(ii) provide support to the Director for answering questions and providing clarifications sought by framework contractors relating to the tender documents,

(iii) undertake any other activities required to ensure the Director fulfils the requirements of the Scottish Ministers' framework contract, and

(iv) undertake any other activities required to assist in the determination of the most suitable framework contractor for the Scheme.

3.4 Inviting Tenders

3.4.1 The Director shall inform the Operating Company of the tender list for each Scheme.

3.4.2 Tenders shall not be invited for any Scheme under a Works Contract until the Director has issued confirmation to the Operating Company that:

(i) negotiations for entry to all the land required for the Works by the planned date for commencement of such Works have been completed,

(ii) any required traffic regulation orders have been consented to and are in place,

(iii) permissions required from the Scottish Environmental Protection Agency have been obtained and any licences required by the *Controlled Activities (Scotland) Regulations 2005* are in place,

(iv) all necessary new or modified road orders for any such Scheme and, where required, the environmental impact assessment or the environmental statement, are not open to any statutory or legal challenge by any third party, and

(v) the environmental notice has been published.

Confirmation from the Director shall represent a Scottish Ministers' Hold Point in the Operating Company's Quality Plan.

3.4.3 When instructed by the Director, the Operating Company shall issue the tender documents to the tenderers on the tender list.

4. AWARD OF WORKS CONTRACT AND FRAMEWORK ORDER

4.1.1 The Director will assess all tenders received and determine the winning tender. The Scottish Ministers will issue a letter of acceptance to the winning tenderer and inform the Operating Company of the details of the winning tenderer.

4.1.2 No later than 25 Working Days prior to the commencement of the Works Contract, the Operating Company shall prepare and distribute copies of the Works Contract documents including the letters of acceptance, amendments and clarifications as follows:

(i) an Electronic Copy and if requested a paper copy, to the Works Contractor,

(ii) the original to the Performance Audit Group,

(iii) one Electronic Copy, when requested, to the Performance Audit Group,

(iv) one Electronic Copy to the Director,

(v) Electronic Copies as required for the use of the Contract Administrator(s), and

(vi) one paper and one Electronic Copy to the Central Office where they shall be retained in accordance with the requirements of Schedule 5 Part 2.

5. CONTRACT MANAGEMENT DUTIES

5.1 General

5.1.1 Subject to an Order, the Operating Company shall act as the Contract Administrator(s) according to the form of contract used for the Works Contract. When acting as the Contract Administrator(s), the Operating Company shall

undertake the roles required of the Contract Administrator(s) as stated in this Part.

5.1.2 The Operating Company shall ensure that all Works Contracts are executed, certified for payment and completed in accordance with the terms of the contract used.

5.1.3 The Operating Company shall ensure that any communications with the Works Contractor are responded to in accordance with the timescales detailed in the terms of contract used.

5.1.4 The Operating Company, in addition to undertaking the duties and roles of the Contract Administrator(s) according to the form of contract used, in acting as the Contract Administrator(s) shall also:

(i) comply with the guidance documents provided by the Director,

(ii) review the Works Contractor's insurance documents to ensure compliance with the Works Contract requirements and report any discrepancies to the Director,

(iii) prepare for, and facilitate, partnering workshops when required by the Director,

(iv) liaise and consult with relevant interested parties including all relevant authorities, the Police, landowners and other third parties as necessary,

(v) notify the Director of changes in accordance with the requirements of paragraph 5.3 of this Part,

(vi) attend Works Contract progress meetings,

(vii) grant access to the Works Contractor to the Site, and

(viii) deal with third party claims in accordance with the provisions of this Contract.

5.1.5 The Operating Company shall undertake the relevant duties required to fulfil the obligations of the CDM Regulations as stated in Schedule 6 Part 2.

5.1.6 The Operating Company shall update the Carbon Management System Road Infrastructure Projects Tool using the data provided by the Works Contractor on the Carbon Management System contractors' data template for projects. The update of the Carbon Management System Road Infrastructure Projects Tool shall be completed no later than 25 Working Days following the completion of the Works.

5.1.7 The Operating Company when acting as the Contract Administrator(s) shall comply with the restrictions on its authority given in this Part.

5.1.8 The Operating Company shall not authorise any person other than the accepted nominee(s) acting as Contract Administrator(s) to act on its behalf for any matter referred to in the Works Contract.

5.1.9 The Operating Company shall not authorise any person other than the accepted nominee(s) acting as the Contract Administrator(s) to act on its behalf at Works Contracts progress meetings except in exceptional circumstances and with the prior written consent of the Director.

5.2 Financial Control and Monitoring of Works Contracts

5.2.1 No later than 10 Working Days prior to the commencement of the Works Contract on Site, the Operating Company shall provide the Director with a copy of the agreed programme and financial forecast for the Works Contract. The Operating Company shall monitor the programme and financial forecast and inform the Director, at intervals not exceeding one month, of:

(i) the physical progress of the Works compared to the agreed programme, and

(ii) the current expenditure and forecast expenditure of the Works Contract compared to the financial forecast.

5.2.2 Within three days of identification by the Operating Company of any circumstances that:

(i) will or may lead to increases or decreases in cost or value in the Works Contract, or

(ii) result in changes in the bills of quantities, programme or milestone schedules contained in the Works Contract,

the Operating Company shall seek consent from the Director as required by Schedule 4 Part 1.

5.2.3 The Operating Company shall develop and propose standard templates for written reporting to the Director when acting as the Contract Administrator(s).These templates shall enable the keeping of a continuous record of physical progress of the Works, the expenditure to date and forecasts of the final costs of each Works Contract. The proposed standard templates shall be submitted to the Director for consent no later than 30 days prior to Commencement of Service Date 1 and when consented to, shall be used by the Operating Company for reporting on each Works Contract. The Director shall determine the frequency at which reports shall be submitted by the Operating Company for each Works Contract and notify the Operating Company when consenting to the standard templates.

5.2.4 The Operating Company shall comply with the requirements of Schedule 4 Part 1 when in receipt of a Works Contractor's application for payment.

5.2.5 The Operating Company shall use standard forms Certificate of Payment CC1A, CCII and CCIII as shown in Annex 6.1/C of this Part. For all Works Contracts regardless of value, the Operating Company shall submit forms CC1A and CCII to the Director with each payment request or monthly valuation, whichever shall be the lesser amount. In addition, form CCIII shall be submitted to the Director for each Scheme at quarterly intervals. For Works Contracts in connection with the Principal Crossings the Operating Company shall develop an alternative form CCIII relating to the nature of the work being undertaken and shall submit this form to the Director for each Scheme at quarterly intervals.

5.2.6 Within 25 Working Days of issuing the Certificate of Completion of a Works Contract involving lane rental conditions, the Operating Company shall prepare and submit to the Director and the Performance Audit Group, the lane

rental monitoring form shown in Annex 6.1/D of this Part in accordance with the requirements of the *Design Manual for Roads and Bridges.*

5.3 Changes to Works Contracts

5.3.1 The Operating Company shall ensure that any proposals for changes to the Works or the programme are executed in accordance with the obligations stated in the Works Contract.

5.3.2 The Operating Company shall keep detailed Records of all relevant information to assist in any discussions, assessment or determination of the changes.

5.3.3 The Operating Company shall have the authority to issue changes in the specification for the Works, Works information, timing, quantities, cost or value that involve changes in expenditure without prior reference to the Director, only when:

(i) there is an emergency when the safety of life or the Works is threatened by imminent danger, or

(ii) the total value of the change proposed does not exceed five percent of the tender value or the change does not exceed £20,000 (whichever shall be the lesser amount).

All such changes shall be reported immediately to the Director in writing.

5.3.4 Any proposals for changes to the Works that are outwith the Operating Company's authority stated in paragraph 5.3.3 of this Part shall be referred to the Director for written consent prior to the changes to the Works being agreed.

5.3.5 Before the issue of any instruction to change or vary the Works, the Operating Company shall consider and value the direct and consequential effects of the various options for implementing change from a financial, engineering or time perspective. The Operating Company shall provide and record accurate estimates to support the selection and agreement of the best value option for the change.

5.3.6 All instructions to change or vary the Works shall be sufficiently detailed to show the precise identification of the location, a description of the change, the estimated cost or the actual cost of the change and any change to the agreed programme. The instructions to change or vary the Works issued to the Works Contractor shall not state the estimated cost or the actual cost of the change.

5.3.7 The Operating Company shall continually review and assess the progress and value of the Works executed under an instruction to change or vary the Works. Where the estimate of value changes for any Works Contract, the Operating Company shall immediately provide such information in writing to the Director, using forms CC1A, CCII and CCIII.

5.3.8 Subject to the requirements in paragraph 5.3.3 of this Part, the Operating Company shall execute the obligations for assessing and agreeing changes to the prices and agreed programme detailed in the form of contract used for the Works Contract. In advance of any Works that are the subject of an instruction to change or vary the Works being carried out by the Works Contractor, the

Operating Company shall ascertain or determine the rates and prices in writing.

5.3.9 When the Operating Company has determined that the Works Contractor is entitled to a change in prices and has certified such for payment, subject to the valuation requirements stated in Schedule 4 Part 1 and the requirements of paragraph 5.3.3 of this Part, no further authority shall be required before payment is effected.

The Operating Company shall ensure that the details of any instruction to change or vary the Works that will increase the financial commitment are provided to the Director in sufficient time for the funds to be available when the payment becomes due. The Operating Company shall ensure that the Director's financial commitment for each Scheme is kept under continual review.

5.3.10 When the Works Contractor has notified its intention to refer a dispute in accordance with the dispute resolution procedures contained in a Works Contract, the Operating Company shall immediately notify the Director. The Operating Company shall provide the Director with all information relating to the dispute. Subject to an Order, the Operating Company shall advise and support the Director in resolving the dispute.

5.3.11 Upon request by the Director, the Operating Company shall provide written explanations, advice and recommendations within two Working Days to the Director in respect of any issues whatsoever arising from any Works Contract.

5.4 Interim Valuations and Final Measurement for Works Contracts

5.4.1 The Operating Company shall record the date of receipt of the Works Contractor's monthly statement and all other communications from the Works Contractor.

5.4.2 The Operating Company shall forward the monthly statement together with forms CC1A, CCII and CCIII to the Director, copied to the Performance Audit Group, no later than 10 Working Days from receipt of the said statement.

5.4.3 When required by the form of Works Contract used, measurement of Works by the Operating Company shall proceed as a continuous activity to ensure that applications for interim payments (monthly statements) can be validated and the Works Contractor's final account settled in accordance with the provisions of the Works Contract.

5.4.4 Where the amount certified for payment for a monthly statement varies from the statement value submitted by the Works Contractor, the Operating Company shall inform the Works Contractor using an Appendix to form CC1A, no later than 5 days before the Final Date for payment due date, in accordance with the provisions of the Works Contract, detailing the amount to be paid and any amounts not paid but claimed by the Works Contractor including the reasons why such amounts will not be paid by the Scottish Ministers. At the same time, the Operating Company shall provide copies of the correspondence to the Director and the Performance Audit Group.

The Operating Company shall ensure an Appendix to form CC1A constitutes the required payment and pay less notices as defined under Sections 110A

and Section 111 of the *Housing Grants, Construction and Regeneration Act (Scotland) 1996 as amended for the Local Democracy, Economic Development Construction Act 2009.*

5.5 As-Built Records

5.5.1 The Operating Company shall prepare as-built Drawings, maintenance schedules and construction and maintenance reports for all Works Contracts and shall include them with the other Records that are held in respect of each Works Contract in the Central Office. Such Records shall comply with the relevant *Design Manual for Roads and Bridges* standards and the CDM Regulations and shall be compiled progressively during the execution of the Works.

A full set of such as-built Drawings and maintenance schedules, including an electronic version, shall be available within the Central Office no later than 75 Working Days after completion of the Works. These Records shall be updated by the Operating Company for all Works Contracts whenever a change to the Works is required.

5.5.2 The Operating Company shall produce as-built Records for Structures in accordance with the requirements of the *Design Manual for Roads and Bridges*. The Operating Company shall provide two copies of such as-built Records for Structures, including an electronic version, one for retention and maintenance within the Central Office and one for issue to the Director, no later than 10 Working Days after completion of the Works.

Where any work is undertaken following the completion of the Works as referred to in the Works Contract, the Operating Company shall amend all copies of the as-built Records accordingly and submit one copy to the Director no later than 10 Working Days after the work has been executed.

This is Annex 6.1/A to Schedule 6 Part 1 referred to in the foregoing Agreement between Scottish Ministers and Amey LG Limited.

SCOTTISH MINISTERS' REQUIREMENTS

SCHEDULE 6 PART 1

PROCUREMENT AND MANAGEMENT OF SCHEMES

ANNEX 6.1/A – Model for Draft Tender Documents Checklist

SCOTTISH MINISTERS' REQUIREMENTS

SCHEDULE 6 PART 1

PROCUREMENT AND MANAGEMENT OF SCHEMES

ANNEX 6.1/A – Model for Draft Tender Documents Checklist

MODEL FOR DRAFT TENDER DOCUMENTS CHECKLIST

Unit : _____

Route and Scheme Name: _____

_____

_____

Scheme Identifier Number: _____

Form of Contract: _____

Note: This checklist is provided as a basis for the Operating Company to ensure all requirements have been addressed. The Operating Company shall adapt this checklist as necessary for use with any of the forms of contract and procurement options that the Operating Company may require to use and that are subject to an Order.

Consent for any such other form of checklist for other forms of contract and procurement options shall be sought in writing by the Operating Company from the Director.

1. GENERAL DOCUMENTATION AND CONDITIONS OF CONTRACT

			Yes/No/(N/A)
1.1	(i)	Is the correct and up to date version of the Instructions for Tendering, as stated in the Model Contract Document (MCD) specified?	
	(ii)	Are all relevant Scheme specific sections completed?	
1.2		Is a completed Health and Safety Plan included and do the Instructions for Tendering include reference to the successful tenderer being appointed as Principal Contractor?	
1.3		Are the correct Form of Tender and associated Certificates included and are the appropriate appendices to the Form of Tender all as specified in the MCD?	

1.4	(i)	Is the correct and up to date version of the conditions of contract based on the specified MCD included.	☐
	(ii)	Are all amendments issued by the Director applied?	☐
1.5	(i)	Are any contract specific requirements to the conditions of contract specified, such as definitions of the Employer, Engineer/Project Manager and Special Requirements included?	☐
	(ii)	Are any changes listed in the Draft Tender Documents Certificate?	☐
1.6		Has the Director given written consent to any additional requirements to the model of the type of contract issued by the Director?	☐

2.		**SPECIFICATION**	**Yes/No/(N/A)**
2.1	(i)	Are the correct Preamble and schedule of relevant publication dates included?	☐
	(ii)	Issue date of Specification used	--/----
	(iii)	Is the most up to date Specification referred to in any Specification clause amendments?	☐
2.2		Are there any relevant clauses or paragraphs from the Term Contract for Management and Maintenance of the Scottish Trunk Road Network Forth Bridges Unit included in the Specification (for example patching or traffic management)?	☐
2.3	(i)	Are all additional or substitute clauses acceptable and have any departures from standard been approved by the Overseeing Department (including alternative materials)?	☐
	(ii)	Are all relevant Scottish Government/Transport Scotland Interim Amendments included?	☐
	(iii)	Are all such changes listed in the Draft Tender documents Certificate?	☐
2.4		Are all relevant Specification Appendices included and completed in accordance with the Notes for Guidance to the Specification for Highway Works (NGSHW)?	

Additional Scheme-Specific Specification Requirements:		**Yes/No/(N/A)**
2.5	Are all relevant materials and workmanship testing requirements included in Appendices 1/5 or 1/6 as per NGSHW table NG 1/1 and other Scheme specific materials?	☐
2.6	Is an appropriate method of setting out, including level control, included in Appendix 1/12 and is all information needed for tendering purposes included?	☐

2.7 Are all programming constraints and traffic management restrictions and requirements included in Appendices 1/13, 1/17, 1/18 and 1/20 as per the NGSHW sample Appendices? ☐

2.8 Are schedules included for fencing, safety fencing, drainage and bearings as per NGSHW sample Appendices? ☐

2.9 (i) Are full earthworks requirements included? ☐

(ii) Has a full geotechnical investigation been carried out where required? ☐

(iii) Has appropriate geotechnical certification been obtained where required? ☐

(iv) Has written consent been given by the Director for specialist materials or activities? ☐

2.10 (i) Are specific requirements of the Scheme for pavement and surface dressing materials (including design mixes) included as per NGSHW sample appendices? ☐

(ii) Has written consent been given by the Director for specialist materials? ☐

2.11 Are fully detailed new sign and road marking schedules included (referenced to drawings if appropriate)? ☐

2.12 Are all electrical, road lighting and cabling requirements as per the Design Manual for Roads and Bridges (DMRB) and NGSHW sample Appendices included? ☐

2.13 Are all maintenance painting of steel Structures requirements included as specified in the stated MCD? ☐

2.14 Are bridge deck waterproofing requirements clear, including approval of proprietary systems? ☐

2.15 (i) Is all structural work clearly defined and does it comply with the appropriate DMRB standards or approved departures? ☐

(ii) Has written consent been given by the Director for significant structural works? ☐

(iii) Have the requirements for any Contractor designed structural elements been defined including Approval in Principal submission requirements? ☐

2.16 Are the requirements for submission of fabrication drawings, method statements, risk assessments etc clearly set out? ☐

3. BILL OF QUANTITIES OR MILESTONE SCHEDULES Yes/No/(N/A)

3.1 (i) Are the correct Preamble and schedule of relevant publication dates included? ☐

(ii) Is the most relevant and/or most up to date Method of Measurement or Milestone Schedule referred to in any amendments? ☐

(iii) Issue date of Method of Measurement or Milestone Schedule used --/----

3.2 Are all items of work, as identified in the Drawings, Specification and Health and Safety Plan, covered? ☐

3.3 Are all standard items as per the Bills of Quantities for Highway Works Library of Standard Item Descriptions? ☐

Yes/No/(N/A)

3.4 (i) Has the Method of Measurement (including itemisation and item coverage) been amended to cover new or non-standard items? ☐

(ii) Has cognisance been taken of non-standard items contained within Term Contract for Management and Maintenance of the Scottish Trunk Road Network - Forth Bridges Unit? ☐

3.5 (i) Is a standard dayworks schedule included or, if not, has Conditions of Contract (ICE 5th Edition Clause 52(3) or equivalent) been omitted? ☐

(ii) Is the inclusion of any provisional sums reasonable? ☐

(iii) Are any such provisional sums consented to in writing by the Director?

3.6 Are all preliminary items (traffic management, offices/messes, recovery vehicles, diversions) included? ☐

3.7 Have all quantities in the Bill of Quantities been checked and do similar items appear to correlate (for example earthwork excavation, disposal, deposition, imported material)? ☐

3.8 (i) Are Prime Cost, Provisional or Nominated Sub-contractor items correctly applied? ☐

(ii) Are provisional sums reasonable? ☐

4. DRAWINGS **Yes/No/(N/A)**

4.1 (i) Are a location plan, general arrangement and a limit/extent of Site drawing or land made available by the Employer for the Works included as appropriate? ☐

(ii) Do these include outlines of general Site clearance, earthworks and structural Works (Contractor Design)? ☐

☐

(iii) Do the drawings identify all constraints on undertaking work and any required sequences of construction?

4.2 Are pavement construction and tie-in details, edge and drainage details, kerbing and footway alignments, electrical details, structural concrete and reinforcement detail and typical traffic management details included? ☐

4.3 Have all Drawings been checked and signed/initialled as such? ☐

5.	**LANE RENTAL AND LANE OCCUPATION**	**Yes/No/(N/A)**
5.1	Is the Scheme lane rental?	
5.2	If not lane rental, has the written consent of the Director been obtained?	
5.3 (i)	Are the bonus/charge amounts or lane occupation charges for main Works and maintenance work defined in the Appendix to Form of Tender or equivalent?	
(ii)	Have the amounts been calculated in accordance with SH 4/91 of the DMRB or has the written consent of the Director been obtained?	
5.4 (i)	Is the Working Day correctly defined in the conditions of contract (ICE 5th Edition Clause 1 or equivalent)?	
(ii)	Has the maximum duration of Works been defined in the Instructions for Tendering in accordance with SH 4/91 of the DMRB?	
5.5	Are paragraphs 5, 6, 7 and 8 for the Instructions for Tendering amended as per SH 4/91 of the DMRB or as appropriate for the particular type of contract to be used?	
5.6	Are conditions of contract clauses 1, 14, 41, 43, 44, 47, 49 and 60 amended as per SH 4/91 of the DMRB or as appropriate for the particular type of contract to be used?	

6.	**CERTIFICATION**	**Yes/No/(N/A)**
6.1	Have all relevant Design and Design Check Certificates Design Interim Certificates and Design Check Interim Certificates and Consultation Certificates from Annex 6.4/A to Schedule 6 Part 4 to the Term Contract for Management and Maintenance of the Scottish Trunk Road Network - Forth Bridges Unit been completed?	
6.2	Has the Draft Tender Documents Certificate and Appendix from Annex 6.1/A to Schedule 6 Part 1 to the Term Contract for Management and Maintenance of the Scottish Trunk Road Network - Forth Bridges Unit been completed and included?	

7. Any Other Operating Company or Scheme Specific Requirements:

8. Any further comments by the Operating Company in relation to sections 1 to 7 inclusive above:

9. Any further relevant comments:

Signed: _____

Name: _____
(BLOCK CAPITALS)

Position: _____

Operating Company:_____

Date: _____

Final tender Documents and Checklist reviewed by Performance Audit Group	**YES**	*
	NO	*

*** Tick as appropriate**

Signed .... Date .....

Name (Block Capitals) .....

Position in Performance Audit Group.....

This is Annex 6.1/B to Schedule 6 Part 1 referred to in the foregoing Agreement between Scottish Ministers and Amey LG Limited.

SCOTTISH MINISTERS' REQUIREMENTS

SCHEDULE 6 PART 1

PROCUREMENT AND MANAGEMENT OF SCHEMES

ANNEX 6.1/B – Draft Tender Document Certificates

SCOTTISH MINISTERS' REQUIREMENTS

SCHEDULE 6 PART 1

PROCUREMENT AND MANAGEMENT OF SCHEMES

ANNEX 6.1/B – Draft Tender Document Certificates

TRANSPORT SCOTLAND

TRUNK ROAD AND BUS OPERATIONS DIRECTORATE

DRAFT TENDER DOCUMENTS CERTIFICATE

SCHEME TITLE .....

SCHEME NUMBER .....

I certify that the draft tender documents enclosed comprising **(Insert list of draft tender documents)* are based on *…*(Insert title of Model Contract Document use)…* and include the variations listed on the attached sheet(s).

I also certify that the draft tender documents comprising ** *(Insert list of draft tender documents)* and fully detailed working Drawings have been prepared for this Scheme and where appropriate, the quantities entered in the bill of quantities are a true measure of the various items of work represented by those Drawings in accordance with ****(Insert title of the Method of Measurement used if appropriate)* **.** The Drawings and documents enclosed herewith are listed on the attached sheet. *(Delete paragraph if bills of quantities not used)*

Signed ..... Date .....

Name (Block Capitals) .....

Position .....

Operating Company .....

.....

Confirmation by Performance Audit Group that the Scottish Ministers' Hold Point referred to at paragraph 3.1.19 of Schedule 6 Part 1 to the Term Contract for Management and Maintenance of the Scottish Trunk Road Network - Forth Bridges Unit shall be released subject to any comments contained in the attached covering letter.

Documents reviewed by Performance Audit Group	**YES**	*
	NO	*

*** Tick as appropriate**

Signed .... Date .....

Name (Block Capitals) .....

Position in Performance Audit Group.....

APPENDIX TO DRAFT TENDER DOCUMENTS CERTIFICATE

SCHEME TITLE .....

SCHEME NUMBER .....

Instructions for Tendering

The undernoted alterations/additions are proposed, compared with the latest standard version issued by the Scottish Ministers.

(List here only paragraph numbers with a note accompanying what has been added or deleted - do not list full wording.)

.....

.....

Conditions of Contract

The undernoted alterations/additions are proposed compared with the current Model Contract Document issued by the Scottish Ministers.

(Note Special Requirements shall be restricted to those listed in the Model Contract Document unless prior written consent has been obtained from the Director in respect of any proposed additions)

(List here only clause numbers with a note clarifying what has been added or deleted - do not list full wording.)

.....

.....

Specification

The undernoted alterations/additions are proposed compared with the latest Manual of Contract Documents for Highway Works issued for the Scottish Ministers or with the paragraphs included in Schedule 6 Part 1 of the Term Contract for Management and Maintenance of the Scottish Trunk Road Network - Forth Bridges Unit.

(List here only clause paragraph or appendix numbers.)

.....

.....

The undernoted scheme specific clauses or appendices have been included.

(List here only clause or appendix numbers but include all appendices which require to be prepared by the Contract Administrator(s)

.....

.....

Preamble and Method of Measurement

The undernoted alterations/additions are proposed compared with the latest Manual of Contract Documents for Highway Works issued for the Scottish Ministers or Schedule 2 Part 1 to the Term Contract for Management and Maintenance of the Scottish Trunk Road Network - Forth Bridges Unit.

(List here only clause numbers with a note as to what has been added or deleted. List if alternative Method of Measurement (for example fixed lump sum) used with date authorised by Director)

.....

.....

Further Tender Documents

The following documents are submitted herewith.

(a) Health and Safety Plan

(b) Drawings numbered and titled as follows:

.....

.....

.....

.....

(c) Bill of Quantities and Milestone Schedule or other such document

This is Annex 6.1/C to Schedule 6 Part 1 referred to in the foregoing Agreement between Scottish Ministers and Amey LG Limited.

SCOTTISH MINISTERS' REQUIREMENTS

SCHEDULE 6 PART 1

PROCUREMENT AND MANAGEMENT OF SCHEMES

ANNEX 6.1/C – Contract Control Forms

SCOTTISH MINISTERS' REQUIREMENTS

SCHEDULE 6 PART 1

PROCUREMENT AND MANAGEMENT OF SCHEMES

ANNEX 6.1/C – Contract Control Forms

This annex contains the following Forms:

(i) CC1A,

(ii) CCII,

(iii) CCII Appendix 1,

(iv) CCII Appendix 2,

(v) CCIII,

(vi) CCIII Appendix 1,

(vii) CCIII Appendix 2.

TRANSPORT SCOTLAND

TRUNK ROAD AND BUS OPERATIONS

OPERATING COMPANY: **CC1A**

Monthly Statement Number _____

Contractor _____ Scheme Identifier [ ]
*(see note below)

Contractor code [ ]

SEAS code [ ]

Scheme Title: _____

Scheme Commencement Date: Scheme Completion Date:

Tender Total £

Contractor's statement submitted on _____ Due Payment Date [ ]

Cumulative Total of payments to Contractor (excluding VAT) £ _____

Less amount previously certified (excluding VAT) £ _____

Amount this certificate (excluding VAT) £

Certificate

We, the Operating Company appointed by the Scottish Ministers hereby certify that the sum of £……(in words)……
is due to this Works Contractor in accordance with the terms of this Contract.

Signed: _____ Date: _____

Name: _____ (Block Capitals)

For the Operating Company

VAT Guidance

Amount of Works which are zero rated =	£	(1)
Amount of Works liable to VAT at 20% =	£	(2)
Total VAT =	£	(3)
Total to be paid (1)+(2)+(3)=	£	

For Transport Scotland Use Only

NMD: Payment Recommended

Signed: _____ Name: _____

For the Director Date: _____

***Where this Contract contains more than one Scheme ID number the following page shall also be completed.**

TRANSPORT SCOTLAND

TRUNK ROAD AND BUS OPERATIONS

OPERATING COMPANY **CC1A**

Monthly Statement Number _____

Breakdown of Scheme where this Contract contains more than one Scheme Identification number

Scheme Identification Number	Amount of Works 0% VAT £	Amount of Works 20% VAT £	Total Works Value £
	(1)	(2)	(1) + (2)

TOTALS =	**£**	**£**	**£**

TRANSPORT SCOTLAND

TRUNK ROAD AND BUS OPERATIONS

FINANCIAL STATEMENT

CC II No……

as at……20… (a) SCHEME TITLE_____

OPERATING COMPANY: TENDER TOTAL £_____ SCHEME NO:_____

CONTRACT PERIOD_____ weeks WORKS CONTRACTOR: _____

CONTRACT COMPLETION DATE: _____

ESTIMATED COMPLETION DATE: _____

(1)	(2)	(3)	(4)	(5)	(6)	(7)	(8)	(9)	(10)
				Progress to Date		Estimated			
Bill No	Details of Works Section Heads from Bill of Quantities or Milestone Schedule	Estimated Cost as in Bill of Quantities etc. (including allowance for Balancing Item)	Value of Work Excluding Nominated Sub-Contract	Value of Work (Nominated Sub-Contract)	Percentage Col (4+5) x100 Col (8)	Further liability	Final Cost	Savings (b)	Excess (b)
		£	£	£	£	£	£	£	£
TOTAL Work carried out against Variation Orders for work not included in Contract (see App 1) and charged to the SE Contingency Provision of: £ _____ (Insert Estimated in (3) and fill in Cols (4) to (10) as appropriate. Adjustments (+ or -) due to Price Fluctuation Clause Financial Change Requests allowed (See App2)									
		SUB TOTAL							
		DEDUCT CREDITS							
		TOTAL							
					Estimated Net Saving/Excess				

Value of Material on Site (97%) (c)
Value of Material Vested but not on site (97%) (c)
SUB TOTAL
DEDUCT: Value of retention money withheld
Cumulative Total of Payments to Works contractor (Total of (4) and (5)

CERTIFICATE
I certify that the expenditure incurred relates to:
(i) Payment to this Contractor in accordance with the terms of the contract and
(ii) is for work which has been duly authorised or notified to The Scottish Executive

NOTES
(a) To be submitted each month for Schemes costing more than £500,000

(b) Enter total savings and total excess in each section head

(c) Only to be included if shown on Appendix to Form to Tender
Date:
(Signed) Operating Company

TRANSPORT SCOTLAND

TRUNK ROAD AND BUS OPERATIONS

CC II No. _____ Appendix 1

A. SUMMARY OF CHANGE ORDERS ISSUED AND

B. RETURN OF OTHER CHANGES (MEASUREMENTS) IN EXCESS OF - £2,000 DURING PERIOD COVERED BY CC II NO_____

SCHEME TITLE:_____

SCHEME NO: _____

VO No (1)	Description of changes with quantities and rates where appropriate (2)	Estimated Cost (3)	Source of Funds (4)	Authority (5)
1.	CHANGES FOR WORK NOT INCLUDED IN CONTRACT			
	Total increase from previous return			
	TOTAL INCREASE TO DATE (enter against work carried out against variation orders on CC II)			
2.	INCREASE IN WORK INCLUDED IN CONTRACT			
	Total increase from previous return			
	TOTAL INCREASE TO DATE (enter against section heads of bill of quantities / milestone schedules and the like on CC II)			
3.	DECREASES IN WORK INCLUDED IN CONTRACT			
	TOTAL DECREASE FROM PREVIOUS RETURN			
	TOTAL DECREASE TO DATE (entered against section heads of bill of quantities / milestone schedules and the like on CC II)			

Signed: Date: Operating Company

CC II No. _____ Appendix 2

STATEMENT OF POSITION REGARDING WORKS CONTRACTOR'S REQUEST

FOR ADDITIONAL PAYMENT OR EXTENSION OF TIME

SCHEME TITLE: _____

SCHEME IDENTIFICATION NUMBER: _____

Request No (1)	Description and Works Contractor's views (2)	Contract Clause (3)	Amount £ or days (4)	Engineer's observations and decision (5)	Amount Allowed £ or days (6)	Remarks (7)

Total of financial requests allowed to Column 3 of Form CCII **£** _____

Signed _____
Operating Company

INSTRUCTIONS FOR COMPLETING FORM: see reverse

Date _____

INSTRUCTIONS FOR THE CONTRACT ADMINISTRATOR(S) COMPLETING FORM CC II Appendix 2

(1) Requests for additional payment or time shall be entered under two headings:

(a) requests notified by the Works Contractor and pending, and

(b) requests certified by the Engineer for payment, or extensions of time notified by the Engineer.

(2) Under each heading give a summary of the current position of requests previously notified, giving details of individual requests only where some development has occurred since the previous report (e.g. contractor supplies valuation and Engineer certifies for payment).

(3) Detail requests notified in period covered by return. If the Works Contractor has not valued financial request then the Engineer shall provide an order of magnitude assessment in column (4) marked "E/A" (estimated amount).

TRANSPORT SCOTLAND

TRUNK ROAD AND BUS OPERATIONS

CC III

SCHEME TITLE: _____

SCHEME IDENTIFICATION NUMBER: _____

ENGINEERING STATEMENT

(To be submitted Quarterly for Works Contract)

No. _____

1. Operating Company _____

2. Name of Works Contractor _____ Date work Commenced_____

3. Period of Contract _____ Months Completion Date_____

4. Contract time elapsed _____ Months

5. Labour Force (on Site) at date of statement

6. Weather Conditions since last Report

7. Overall Progress

Quarter ended _____ Signed _____
Operating Company

Dated _____

TRANSPORT SCOTLAND

TRUNK ROAD AND BUS OPERATIONS

CC III No.____ Appendix 1

PROGRESS DETAILS

ROAD AND GENERAL WORKS

Description (As in main headings of sections of bill of quantities or milestone schedule)	%Completed during quarter	%Completed to date	Remarks indicating if quantities or costs are likely to be exceeded by more than 10 per cent
	Insert % of work (not cost)		
	(Based on Current estimate of final quantities or milestone)		
General Preliminaries			
Site Clearance			
Fencing			
Road Restraint Systems			
Drainage			
Earthworks			
Sub-Base and Road Base			
Flexible surfacing			
Footpaths, Paving and Kerbing			
Accommodation Works			
Other headings as relevant			

Note: the headings given above are examples and therefore indicative only

TRANSPORT SCOTLAND

TRUNK ROAD AND BUS OPERATIONS

CC III No.____ Appendix 2

PROGRESS DETAILS

BRIDGE WORKS

Bridge No.	Name and Description of Bridge	Stage Reached (Insert % of work (not cost) in appropriate column)				
		Excavation	Foundations	Super Structure	Decking	Complete

This is Annex 6.1/D to Schedule 6 Part 1 referred to in the foregoing Agreement between Scottish Ministers and Amey LG Limited.

SCOTTISH MINISTERS' REQUIREMENTS

SCHEDULE 6 PART 1

PROCUREMENT AND MANAGEMENT OF SCHEMES

ANNEX 6.1/D – Lane Rental Form

SCOTTISH MINISTERS' REQUIREMENTS

SCHEDULE 6 PART 1

PROCUREMENT AND MANAGEMENT OF SCHEMES

ANNEX 6.1/D – Lane Rental Form

MONITORING FORM FOR LANE RENTAL SCHEMES

GENERAL SCHEME DETAILS – MAINTENANCE SCHEMES

Region		**Route**	
Scheme No.		**Contract Type***	
Works Type		**Title**	
Contract Start Date		**Contractor**	

CONTRACT DURATION

Contract Period Allowed in Tender Documents	days
Contractor's Stated Contract Period	days
Actual Time Taken	days
Extension of Time Granted due to Weather	days
Extension of Time Granted due to Additional Work	days
Claims for Extension of Time Outstanding due to Weather	days
Claims for Extension of Time Outstanding due to Additional Work	days
Estimated Settlement of Claims Outstanding due to Weather	days
Estimated Settlement of Claims Outstanding due to Additional Work	days

CONTRACT COSTS (excluding Operating Company design, supervision and procurement fee but including VAT on Works where appropriate)

Pre-Tender Estimate					£
Accepted Tender Price (adjusted price if lane rental)					£
Site Supervision Costs Up to Substantial Completion					£
Sum Paid to Contractor on Substantial Completion (including Bonus/Charge & claims)					£
Retention					£
Total Claims Granted					£
Total Claims Outstanding					£
Estimated Settlement of Total Claims Outstanding					£
Bonus B or Charge C	£ Daily	B	£ Total	or C	£

* Conventional
Own Time Limit
Lane Rental

SCHEDULE 6 PART 2

CONSTRUCTION (DESIGN AND MANAGEMENT) REGULATIONS 2007

SCOTTISH MINISTERS' REQUIREMENTS

CONTENTS **Page No.**

1.	**OVERALL REQUIREMENTS**	**1**
1.1	Definitions	1
1.2	Role of the Operating Company	2
1.3	Construction (Design and Management) Regulations 2007 – CDM Coordinator	3

SCOTTISH MINISTERS' REQUIREMENTS

SCHEDULE 6 PART 2

CONSTRUCTION (DESIGN AND MANAGEMENT) REGULATIONS 2007

1. OVERALL REQUIREMENTS

1.1 Definitions

1.1.1 For the purpose of this Part the terms "client", "CDM Coordinator", “construction phase plan”, "designer", “health and safety file”, “pre-construction information” "principal contractor" shall have the meanings assigned to them in the CDM Regulations.

1.1.2 The term Client's Representative relates to the single point of contact for the client in respect of the CDM Regulations. This role is not required by the regulations but is considered to be best practice. The Operating Company, when undertaking the Client's Representative role, will be delegated with the responsibility of ensuring that the client's duties in respect of the CDM Regulations are undertaken although the ultimate legal responsibility will remain with the Scottish Ministers. For the purposes of this Contract a member of the Core Management Team will be nominated as the Client's Representative for consent by the Director.

1.1.3 The nominated Client’s Representative shall be a Chartered member of at least one of the following:

(i) the Institution of Civil Engineers,

(ii) Institution of Structural Engineers,

(iii) Institute of Highway Engineers, or

(iv) Institution of Highways and Transportation.

and shall have demonstrable knowledge of health and safety in construction issues and Legislation, experience of significant work on similar schemes with comparable hazards and complexity, to the Operations and Works to be carried out under this Contract. The nominated Client’s Representative shall in addition be a registered member of the Association of Project Safety (RMaPSM) or member of the Institution of Construction Safety (M Inst. CS or F Inst. CS), and shall have not less than ten years experience relevant to health and safety in design, construction and management.

1.1.4 The Client’s Representative shall not carry out the role of CDM Coordinator or any other duty holder under the CDM Regulations in respect of Operations carried out under this Contract.

1.1.5 The Client’s Representative shall assist the Scottish Ministers in discharging their duty as the client under the CDM Regulations and provide services in relation to all planning, design, construction and maintenance activities for Operations and Works undertaken or proposed to be undertaken by the Operating Company including collection and provision to the Director of detailed information on individual Operations and Works, health and safety risk identification and management and health and safety performance. During Mobilisation Period 1 and at least 60 days prior to Commencement of Service Date 1 the Client’s Representative shall submit

to the Director for his consent initial proposals for discharging the role of Client's Representative and be available to discuss such proposals. The Client's Representative will be expected to critically analyse health and safety information processes and procedures related to Operations and Works and advise the Director on potential risks and the range of actions that can be taken to address any such risks, within the scope of client duties under the CDM Regulations. The Client's Representative shall attend monthly meetings with the Director and prepare and submit a monthly report to the Director five Working Days prior to the monthly meeting.

1.2 Role of the Operating Company

1.2.1 The Operating Company shall:

(i) be appointed as the Client's Representative in respect of the CDM Regulations and will be required to assist the Scottish Ministers in fulfilling its duties as client, in accordance with the CDM Regulations in respect of all activities under this Contract that shall be covered by the CDM Regulations, and

(ii) be responsible for acting as designer and CDM Coordinator, or

(iii) assist the Director in the appointment of other organisations as designer(s) or CDM Coordinator(s) as shall be required during the Contract Period.

The Operating Company, as Client's Representative, shall assist the Director in the appointment of designer(s) and CDM Coordinator(s) until the Service End Date. This will require carrying out the appropriate checks on the organisation's competence and resources in relation to the role for which it is being considered, and the production of a report for the consideration of the Director prior to formal appointment of the organisation, in writing, by the Director. Where the full requirements of the CDM Regulations apply, and prior to issuing tender invitations for Works Contracts, the Operating Company, as Client's Representative, shall advise the Director in writing that the CDM Regulations apply and shall require the tenderers to confirm their willingness to undertake the role of principal contractor. This requirement is in addition to the duties of the CDM Coordinator appointed for any Scheme.

1.2.2 The Operating Company, as Client's Representative, shall advise the Director of the suitability of a company (including a direct labour organisation) for appointment as the principal contractor prior to the award of a Works Contract. The appointment of the principal contractor shall be concurrent with contract award.

1.2.3 The Operating Company shall be appointed to be the principal contractor when undertaking Operations to which the CDM Regulations apply and that require notification to the Health and Safety Executive. This appointment shall be made, in writing, by the Director. The Operating Company, as Client's Representative, must ensure that any appointments made in relation to these Operations are formally recorded in writing.

1.2.4 During Mobilisation Period 1, the Operating Company shall develop a documented procedure for ensuring compliance with the CDM Regulations as part of the Management System including the Quality Plan that shall include as a minimum:

(i) the secure storage and location (both hard copy and Electronic Copy) of all the files and other records required by the CDM Regulations (which files and records shall be Records for the purposes of this Contract) including but not limited to:

(a) appointments made or altered,

(b) construction phase plans,

(c) agreements as to who shall provide the health and safety file,

(d) health and safety files, including as a minimum those received from the Director relating to Network 2 and any previous operating company for any part of the Unit and those forming part of Historical Records,

(e) survey and investigation reports,

(f) notification to Health and Safety Executive (F10 forms),

(g) the pre construction information and other information obtained from the client,

(h) advice given and information transferred to the CDM Coordinator, designer and principal contractor, and

(i) advice received from the CDM Coordinator, designer and principal contractor,

(ii) the methods by which the information required by the CDM Regulations to be made available by the Operating Company to the CDM Coordinator, designer and principal contractor shall be transferred to these parties.

1.2.5 The Operating Company shall ensure that the health and safety files are prepared and handed over by the CDM Coordinator in full compliance with the CDM Regulations.to comply with the CDM Regulations.

1.2.6 All documentation and or information produced by the Operating Company in terms of this Part shall be a Record and in addition to the requirements of this Part shall be retained as set out in Schedule 5 Part 2.

1.3 Construction (Design and Management) Regulations 2007 – CDM Coordinator

1.3.1 The CDM Coordinator shall be an individual with appropriate qualifications and competence as identified in Schedule 5 Part 4 to carry out the function of CDM Coordinator. The CDM Coordinator shall be able to demonstrate the independence of this role from that of the team responsible for design and planning to the Director, to the Operating Company, and to any person nominated by either of them. This will apply for all instances where a CDM Coordinator is appointed either within the Operating Company or externally.

1.3.2 The CDM Coordinator appointed for each part of the Operations, each Scheme or Work Contracts shall be required to comply with the general duties of a CDM Coordinator as set out under the CDM Regulations.

1.3.3 Individuals nominated as CDM Coordinator shall be assigned to Operations, Schemes and or Works Contracts on the basis of their competence and experience and not as a general appointment for all Operations, Schemes and or Works Contracts under this Contract.

1.3.4 The contact details for individuals nominated as CDM Coordinator(s) shall be provided to the Operating Company and the Director within 14 days of each or any appointment.

SCOTTISH MINISTERS' REQUIREMENTS

SCHEDULE 6 PART 3

ROAD SAFETY AUDITS

CONTENTS **Page No.**

1.	**GENERAL**	**1**
1.1	Introduction	1
1.2	Role of Operating Company	1
2.	**ROAD SAFETY AUDITS UNDERTAKEN BY THE OPERATING COMPANY**	**1**
2.1	Clarifications and amendments to the Design Manual for Roads and Bridges	1
2.2	Requirements	1
3.	**SCOPES AND STAGES OF ROAD SAFETY AUDITS**	**2**
3.1	Procedures	2
3.2	Stage 1 – Preliminary Design	2
3.3	Stage 2 – Detailed Design	3
3.4	Stage 3 – Completion of Construction	4
3.5	Stage 4 – Monitoring	4
4.	**OTHER ROAD SAFETY AUDITS**	**5**
4.1	Road Safety Audits of Schemes Designed or Constructed by Others	5
4.2	Road Safety Audits Carried Out by Others	5
5.	**CERTIFICATION**	**5**
5.1	Requirements	5

SCOTTISH MINISTERS' REQUIREMENTS

SCHEDULE 6 PART 3

ROAD SAFETY AUDITS

1. GENERAL

1.1 Introduction

1.1.1 Road safety audits shall be undertaken in accordance with the *Design Manual for Roads and Bridges* and *Transport Scotland Interim Amendment 40/11 - Road Safety Auditor Certification – Compliance with EC Directive 2008/96/EC.*

1.2 Role of Operating Company

1.2.1 The Operating Company shall organise road safety audits of Schemes for which it will be carrying out the Design and or supervision of the Operations or Works and the associated temporary traffic management.

1.2.2 The Director has the right, at his sole discretion, to instruct a third party to undertake the road safety audit, for example where an Operating Company conflict of interest is identified.

1.2.3 Subject to an Order, the Operating Company shall be required to carry out road safety audits on Schemes designed or constructed by others.

1.2.4 The requirements of road safety audits shall be managed by the Road Safety Manager.

1.2.5 The Operating Company shall maintain and update the Route Safety File which shall contain details of all Stage 1, 2, 1/2, 3 and 4 road safety audit reports, including audits undertaken by third parties, in relation to that Route.

2. ROAD SAFETY AUDITS UNDERTAKEN BY THE OPERATING COMPANY

2.1 Clarifications and amendments to the Design Manual for Roads and Bridges

2.1.1 For the purposes of paragraphs 2 and 3 of this Part, the following are clarifications of definitions given in the *Design Manual for Roads and Bridges*:

design organisation	means the designated Design team responsible for the Scheme within the control of the Operating Company,
Project Sponsor	means the Operating Company's Representative except where expressly provided otherwise in this Contract.

2.1.2 The words "Project Sponsor" as referred to in paragraphs 2.48 to 2.51 inclusive of HD19/03 of the *Design Manual for Roads and Bridges*, and paragraphs 2.2 to 2.3 of *Transport Scotland Interim Amendment 40/11* shall be deleted and replaced with "Director" for the purposes of paragraphs 2 and 3 of this Part.

2.2 Requirements

2.2.1 The Operating Company shall submit its nominated personnel for the roles of the audit team members and audit observers to the Director for written consent.

2.2.2 The Operating Company shall demonstrate the competence of the nominated audit team members by submitting details of their training and experience to the level required by paragraph 2.57 of HD19/03 of the *Design Manual for Roads and Bridges* and section 3 of *Transport Scotland Interim Amendment 40/11*, to the Director.

2.2.3 The Director must be satisfied that the team has adequate and relevant training, skills and experience for each road safety audit undertaken.

2.2.4 The Director shall not give consent to any nominated personnel if he considers that they lack the necessary experience and training or if their independence is in doubt. In such cases the Director shall instruct the Operating Company to submit alternative nominees for consideration.

2.2.5 Once consented to by the Director, the nominated individuals may be called upon to take part in road safety audits in the role for which consent has been given.

3. SCOPES AND STAGES OF ROAD SAFETY AUDITS

3.1 Procedures

3.1.1 The scopes and stages of road safety audits are stated in HD19/03 of the *Design Manual for Roads and Bridges*.

3.1.2 The Operating Company shall ensure that two copies of each road safety audit report, including any attachments, are sent to the Director within five Working Days of being undertaken.

3.1.3 The Operating Company shall ensure that all issues raised by the audit team are given due consideration by the design organisation.

3.1.4 The Operating Company shall submit to the Director two copies of an exception report, when required, for any stage of a road safety audit where the design organisation considers the comments provided within the road safety audit report are not viable or applicable within the scope of the Scheme. The Operating Company shall ensure the exception report gives reasons and proposes alternatives in the exception report for the Director's consent.

3.1.5 The Operating Company shall submit two copies of the audit brief to the Director for comment.

3.1.6 The requirements for road safety audits on Schemes which meet the criteria for audits referred to in this Part are in addition to any other requirements for road safety audits stated in the *Design Manual for Roads and Bridges*.

3.2 Stage 1 – Preliminary Design

3.2.1 The preliminary Design for a Scheme shall be subjected to a stage 1 road safety audit.

The Operating Company shall ensure that the design organisation, in addition to meeting the requirements of the *Design Manual for Roads and Bridges*, submits the following information to the road safety audit team where relevant:

(i) 1:1250 or 1:2500 scale general layout drawings showing horizontal and vertical alignment details together with visibility requirements including as a minimum details of:

(a) junctions,

(b) drainage,

(c) landscaping,

(d) accesses,

(e) utilities,

(f) lay-bys,

(g) sign gantries,

(h) traffic signals, and

(i) street lighting.

(ii) 1:500 scale plans of special features and interfaces with existing roads,

(iii) standard details and typical cross sections including road restraint systems,

(iv) accident data including locations,

(v) traffic flows including vehicular, pedestrian, cyclist and equestrian movements, and

(vi) details of relaxations and departures from standards as stated and defined in the *Design Manual for Roads and Bridges*.

3.2.2 The Operating Company shall ensure that the design organisation has addressed all matters raised in the road safety audit report before progressing to the next stage.

3.3 Stage 2 – Detailed Design

3.3.1 The detailed Design shall be subjected to a stage 2 road safety audit.

3.3.2 The Operating Company shall ensure that the design organisation submits to the road safety audit team any information not previously submitted, or information amended from that given at stage 1 and, where applicable, with:

(i) 1:500 scale Scheme plans of the road layout showing all junctions including verges and extent of side slopes,

(ii) drawings showing:

(a) road restraint systems,

(b) pedestrian guard rails,

(c) bridge parapets,

(d) walls,

(e) other Structures,

(f) signs including location, poles, arrangements and sign fascia,

(g) road markings,

(h) lighting, and

(i) other features,

(iii) drawings showing road surface contours, drainage details and carriageway details,

(iv) traffic signal and integrated traffic systems details, and

(v) copies of the previous road safety audit and exceptions reports.

3.3.3 The Operating Company shall ensure that all amendments to the Design required as a result of the stage 2 road safety audit shall be incorporated into the Design of a Scheme before the Operations on Site, or procurement of Works Contracts, commences.

3.4 Stage 3 – Completion of Construction

3.4.1 The Operating Company shall give the Director at least 14 days' notice in writing when a Scheme, or any part thereof, is ready for a stage 3 road safety audit.

3.4.2 Fourteen days prior to the due date of any audit, the Operating Company shall invite representatives of the Director, the design organisation, and the Police to attend all stage 3 road safety audits to offer their views. These representatives do not constitute part of the road safety audit team and the responsibility for the production of the road safety audit report shall remain with the audit team leader.

3.4.3 The audit team leader shall provide immediate feedback to the representative(s) of the Director while on Site in relation to any road safety concerns raised in the stage 3 road safety audit.

3.4.4 The Operating Company shall discuss the findings on Site and any previous exception reports with the Director prior to any additional work being carried out. This feedback and discussion shall be included in the stage 3 road safety audit report.

3.4.5 The Operating Company shall ensure that additional work, together with any corrective work, is incorporated into the Scheme. The Director shall issue an Order for any additional work required that has been identified in the stage 3 road safety audit report. In the case of a Works Contract, any additional and or corrective work shall be completed before a Certificate of Completion is issued under the Works Contract.

3.5 Stage 4 – Monitoring

3.5.1 Stage 4 monitoring shall include any Scheme for which construction was completed before Commencement of Service Date 1.

The stage 4 monitoring report shall include the accident data logged in the Integrated Roads Information System for 12 months and 36 months after the Scheme becomes operational.

3.5.2 The Operating Company shall notify the Director no later than four weeks before the due date of the 12 month and 36 month stage 4 monitoring reports.

3.5.3 The Operating Company shall submit a stage 4 road safety audit report to the Director that provides an analysis of accidents as stipulated in the *Design Manual for Roads and Bridges* and provides details of any operational issues arising from the Works that were not apparent at the stage 3 road safety audit.

3.5.4 Where the Director procures a stage 4 road safety audit from a third party, the Operating Company shall, subject to an Order, provide information required for the analysis of accidents and descriptions of operational difficulties to the third party.

3.5.5 The Operating Company shall discuss the findings of the stage 4 road safety audit report with the Director.

3.5.6 The Director shall issue an Order to the Operating Company to cover any additional work required as a result of the reports.

4. OTHER ROAD SAFETY AUDITS

4.1 Road Safety Audits of Schemes Designed or Constructed by Others

4.1.1 Subject to an Order, the Operating Company shall perform road safety audits on schemes located within the Unit which will be, or were, designed or constructed by others. In such cases, the Operating Company shall perform the relevant road safety audits as required by this Part.

4.2 Road Safety Audits Carried Out by Others

4.2.1 Schemes promoted by others, where the design organisation is outwith the control of the Operating Company, shall be the subject of road safety audits carried out on behalf of the promoters of the schemes and the reports shall be submitted to the Director who will provide them to the Operating Company for review. Subject to an Order, the Operating Company, shall review and comment to the Director on any points of concern contained within such road safety audit reports.

5. CERTIFICATION

5.1 Requirements

5.1.1 The Operating Company shall complete a road safety audit Certificate at the completion of each road safety audit and submit such Certificate to the Director within five Working Days of the road safety audit being undertaken. The Certificate shall be in the form shown in Schedule 6 Part 4.

SCOTTISH MINISTERS' REQUIREMENTS

SCHEDULE 6 PART 4

DESIGN AND CERTIFICATION OF OPERATIONS AND WORKS

CONTENTS **Page No.**

1.	**INTRODUCTION**	**1**
1.1	Overall Requirements	1
2.	**DESIGN**	**2**
2.1	Design Brief	2
2.2	Design Procedure	2
3.	**CERTIFICATION PROCEDURES**	**5**
3.1	General	5
3.2	Design Certificates and Design Check Certificates	6
3.3	Earthwork Certification	7
3.4	The Staged Procedure for Design Interim Certificates and Design Check Interim Certificates	8
3.5	Information to be provided with Design Certificates, Check Certificates, Design Interim Certificates and Design Check Interim Certificates	9
3.6	Design Construction Completion Certificates	10
3.7	Construction Completion Certificates	10
3.8	Maintenance Certificates	10
3.9	Design Defects Correction Certificate	10
3.10	Consultation Certificate	10
3.11	Road Safety Audit Certificate	10
3.12	Certificate for Departure from Standard or Aspects Not Covered by Standards	11
3.13	Records and Registers	11

ANNEX 6.4/A – Certificates in Relation to Certification Procedures **15**

SCOTTISH MINISTERS' REQUIREMENTS

SCHEDULE 6 PART 4

DESIGN AND CERTIFICATION OF OPERATIONS AND WORKS

1. INTRODUCTION

1.1 Overall Requirements

1.1.1 Operations executed by the Operating Company may require the Operating Company to execute a Design. The Operating Company shall execute such Design.

For the purposes of this Contract the following category of Design will not be subject to an Order:

(i) Design for Core Operations, which includes Design for Schemes that have an Estimated Construction Value of no more than £50,000.

For the purposes of this Contract the following three categories of Design shall be subject to an Order if the Director requires such Design to be executed:

(i) Design for Schemes with an Estimated Construction Value of more than £50,000 that are undertaken by the Operating Company as Ordered Operations,

(ii) Design for Works undertaken by Works Contractors, or

(iii) Design for work undertaken by any other third party.

1.1.2 The Design procedure for the categories of Design identified in paragraph 1.1.1 of this Part shall be identical up to the stage at which:

(i) calculations have been completed,

(ii) working Drawings prepared, and

(iii) all certification for the said Design has been completed and registered in the Central Office by the Operating Company.

1.1.3 The Design procedure shall not include road safety audits. Road safety audits shall be undertaken in accordance with Schedule 6 Part 3.

1.1.4 Figure Annex 6.2 titled "Contractual Provisions for Design Associated with Schemes" in Schedule 1 Annex 6 illustrates the approach to be taken for Design for Core Operations and for Ordered Operations.

2. DESIGN

2.1 Design Brief

2.1.1 The Operating Company shall provide the Director with a brief for a Design when appropriate that includes as a minimum:

(i) an outline of the Design requirement,

(ii) for Designs for all Schemes with an Estimated Construction Value over £50,000, the estimated cost of the Design calculated in accordance with Schedule 2,

(iii) the name and grade for each Operating Company employee involved with the Design,

(iv) a full detailed programme for the Design including all hold points,

(v) the Operating Company's method of approach to the Design,

(vi) development of preliminary and conceptual Design options,

(vii) recommendation of the preferred Design to the Director with justification,

(viii) submissions and presentations, and

(ix) the estimated cost of the Scheme at Design brief stage.

2.1.2 The Director will consider the brief and at his discretion, request the Operating Company to amend and re-submit it.

2.1.3 The Director will confirm whether or not the brief is acceptable and at his discretion require the Operating Company to execute a Design. Design for Schemes that have an Estimated Construction Value of over £50,000 will be subject to an Order.

2.2 Design Procedure

2.2.1 For Ordered Operations with an Estimated Construction Value of more than £50,000 the Director will issue an Order for the Operating Company to execute a Design. For Ordered Operations with an Estimated Construction Value of no more than £50,000 the Director will issue an instruction to execute a Design. Such Order or instruction shall state the requirements for the Design, including, where appropriate, the:

(i) production of a Design and estimated Scheme cost,

(ii) confirmation that the brief provided by the Operating Company is acceptable to the Director or that an amended brief is required,

(iii) programme requirements for the various parts of the procurement procedure for the Scheme including the latest date for commencement of the Design,

(iv) development of employer's requirements for use with a Works Contractor's Design contract,

(v) investment appraisal and whole life costings,

(vi) value management or value engineering workshops and studies,

(vii) requirements for the preparation of road orders, plans, schedules, environmental impact assessments and environmental statements, and

(viii) in addition, for all Works Contracts:

(a) latest date for commencement of the Works,

(b) latest date for completion of the Works,

(c) estimated cost of Works,

(d) clarification in writing that the Operating Company shall act as the Contract Administrator for the Scheme, and

(e) clarification in writing to the Operating Company that the Operating Company shall supervise the Works.

2.2.2 The Design shall include as a minimum:

(i) preparation of Drawings and specifications for a Scheme or repair of Damage to Crown Property,

(ii) engineering calculations for a Scheme or repair of Damage to Crown Property,

(iii) reasons for choice of materials (including replacing with the same or similar materials),

(iv) reasons for choice of equipment,

(v) reasons for specifying particular standards or departures therefrom,

(vi) reasons for extent or scope of a Scheme or repair of Damage to Crown Property,

(vii) reasons for the Design option developed,

(viii) the construction phase plans in accordance with the CDM Regulations, and

(ix) any other requirements necessary to be included in the Design to enable the execution and completion of a Scheme or repair of Damage to Crown Property.

2.2.3 Subject to an Order, the Operating Company shall undertake investigations and studies to supplement the information referred to in paragraph 4.2 of Schedule 4 Part 1 and necessary for the completion of the Design including:

(i) feasibility and option studies,

(ii) aesthetic review with Transport Scotland's aesthetic adviser,

(iii) further investigations,

(iv) ground investigations,

(v) route option proposals,

(vi) road safety audits,

(vii) business impact studies,

(viii) traffic impact studies,

(ix) economic evaluation studies, and

(x) any other investigations or studies required by the Director.

2.2.4 Where a Design of any Scheme carried out by the Operating Company requires the acquisition or procurement of land, the Operating Company shall prepare land plans and schedules in accordance with the requirements of the Director.

When requested by the Director, the Operating Company shall assist the Director in carrying out negotiations for the acquisition, procurement or entry to such land.

2.2.5 The Operating Company shall ensure all Design complies with the *Design Manual for Roads and Bridges together with any other relevant Scottish Executive and Transport Scotland addendums and Interim Amendments*, the *Manual of Contract Documents for Highway Works,* the *Roads for All: Good Practice Guide for Roads*, this Contract and any other Design requirements issued by the Director. All Design shall be certified in accordance with the certification procedures specified in this Contract. Compliance with the *Roads for All: Good Practice Guide for Roads* shall not absolve the Operating Company from any liability under the *Equality Act 2010.*

2.2.6 Where the provisions contained within the *Roads for All: Good Practice Guide for Roads* conflict with those of the *Design Manual for Roads and Bridges*, the Operating Company shall inform the Director and make recommendations on which provisions should be used for the Design. The Director shall decide between the conflicting provisions.

2.2.7 The Operating Company shall require express written consent from the Director to any departure from the *Design Manual for Roads and Bridges,* the *Manual of Contract Documents for Highway Works* or the *Roads for All: Good Practice Guide for Roads* prior to any departure being incorporated into the Design. All departures consented to by the Director shall use the departure from standards Certificate detailed in Annex 6.4/A of this Part.

2.2.8 The Operating Company shall, assess all Designs of Schemes to determine if an environmental impact assessment is required and shall notify the Director of the outcome of such assessment in a draft Record of Determination. Depending upon the scope of the Design, the draft Record of Determination shall be supported, where applicable, by either:

(i) an environmental assessment report, or

(ii) an environmental review report,

to be held by the Operating Company at the Central Office for all Designs prior to the completion of Design or certification.

2.2.9 The Operating Company shall hold the documents at the Central Office and shall not complete Design or certification until the Director's consent to the draft Record of Determination, draft environmental assessment report or draft environmental review report has been received.

2.2.10 Once consented to, the Record of Determination, environmental assessment report or environmental review report shall be signed by the Director before publication of Statutory Orders and retained at the Central Office.

2.2.11 When the Director determines that an environmental impact assessment is required, the Operating Company shall ensure that the relevant statutory procedures are followed and the findings of the environmental impact assessment reported in an environmental statement.

2.2.12 Where the Design of any Scheme requires new road orders, variations to existing road orders, environmental impact assessments and subsequent environmental statements, the Operating Company shall, as part of the Design and in accordance with the *Design Manual for Roads and Bridges*:

(i) prepare the required road orders, plans, schedules, environmental impact assessments and environmental statements, and

(ii) submit these when required to the Director.

The Director, assisted as required by the Operating Company, shall publish environmental statements and public notices of determination and make the said road orders in accordance with the procedures referred to in the Legislation.

2.2.13 The Operating Company shall prepare the pre-construction information in accordance with the CDM Regulations as part of any Design.

3. CERTIFICATION PROCEDURES

3.1 General

3.1.1 All Design shall be certified in accordance with the certification procedures specified in this Contract. Such certification shall be undertaken as part of the Order for the Design.

3.1.2 Where the Operating Company executes or procures a Design, it shall provide certification to cover the Design or Design Element(s) where the:

(i) Scheme(s) is subsequently executed by the Operating Company, or by a Works Contractor, or

(ii) Relevant work is executed by others.

3.1.3 The certification procedures shall apply to all Operations that constitute Design or any activity that relates to specifying Operations and to the manner in which they are executed.

3.1.4 The Technical Approval of Structures shall be in accordance with the *Design Manual for Roads and Bridges* together with any other relevant Scottish Executive and Transport Scotland addendums and Interim Amendments. Prior to the Operating Company commencing a Design for:

(i) Structures (including temporary Structures), or

(ii) the strengthening, structural repair or partial renewal of existing Structures, or

(iii) Mechanical and electrical installations related to structures,

a Design proposal shall be submitted to the Director at the preliminary Design stage on an approval in principle (AIP) form. Copies of forms AIP1, AIP2 and AIP3 are provided in Annex 6.4/A of this Part. Submission of the AIP form by the Operating Company shall represent a Scottish Minister's Hold Point in the Quality Plan.

No further Operations in respect of any such Design shall be executed until the Director returns the AIP form granting consent to the Operating Company. The Director's consent may include amendments that are required or conditions that are placed in connection with the consent.

3.1.5 The Director will not accept modifications or qualifications to any of the Certificates and notices provided in Annex 6.4/A of this Part other than those consented to in advance and in writing.

3.1.6 The certification procedure associated with a part of a Design or Design Element shall be deemed to cover all aspects and stages of a Design or Design Element.

3.1.7 Where the value of the Scheme or repair of Damage to Crown Property is less than £100,000 the Operating Company shall use the most recent version of the appropriate combined Design and Design Check Certificate contained in Annex 6.4/A of this Part in lieu of the other Design and check Certificates.

3.2 Design Certificates and Design Check Certificates

3.2.1 The Design check for all Structures shall be carried out by the Operating Company in accordance with the procedures described in *Design Manual for Roads and Bridges*. Prior to executing any Design checks, the Operating Company shall submit the name of the proposed independent Checker to the Director for written consent prior to executing any Design checks.

3.2.2 Design Certificates and Design Check Certificates shall be prepared by the Operating Company for all parts of a Design or Design Element(s) including where appropriate:

(i) accommodation work,

(ii) drainage,

(iii) earthworks,

(iv) environment and landscaping,

(v) fencing and environmental barriers,

(vi) kerbs footways and paved areas,

(vii) lighting and electrical work,

(viii) piling,

(ix) road layout,

(x) road pavements,

(xi) road restraint systems,

(xii) signs and road markings,

(xiii) Structures,

(xiv) departures from standard or aspects not covered by standards, and

(xv) any other Design Element not covered above.

3.2.3 For Schemes, other than Schemes which involve works on the Principal Crossings, that have an Estimated Bid Value of less than or equal to £1,000,000, the Design check for all parts of the Design or all parts of the Design Elements shall be subject to a check in accordance with the procedures described in the *Design Manual for Roads and Bridges*. The checking procedures for Schemes on the Principal Crossings shall be category 3 in accordance with the *Design Manual for Roads and Bridges*.

3.2.4 The Design check for any Operations, Works or work carried out by others with an Estimated Bid Value of more than £1,000,000 shall be executed by a Checker unless otherwise instructed in writing by the Director.

3.2.5 When parts of a Structure are designed by more than one Designer, a category 3 Design check for the whole Structure shall be carried out by a single Checker.

3.2.6 Separate Design Certificates and Design Check Certificates shall be prepared by the Operating Company for the Design of each Structure.

3.2.7 Construction of any part of the Operations, Works or work carried out by others that requires a Certificate in accordance with requirements of this Part shall not commence until the relevant completed Certificate with all associated information has been recorded and contained within the Design register or Design check register.

3.3 Earthwork Certification

3.3.1 The Operating Company shall comply with the requirements for earthworks certification as stated in the *Design Manual for Roads and Bridges* except where such requirements have been amended or modified as stated within this Contract.

A copy of the factual report as referred to in the *Design Manual for Roads and Bridges* shall be forwarded to the relevant Scottish office of the British Geological Survey on completion of the Design.

3.3.2 All Operations or Works involving earthworks shall be subject to a ground investigation in accordance with the *Design Manual for Roads and Bridges* and the *Manual of Contract Documents for Highway Works*.

Subject to an Order, the Operating Company may procure ground investigations services by a framework agreement for ground investigation services or as required by the Order. The Scottish Ministers will remain the “Employer” for all said agreements. The Director will decide how the ground investigation services are procured and shall advise the Operating Company of his decision.

3.3.3 Subject to an Order, the Operating Company shall act as Contract Administrator for any such ground investigations. The duties of the Engineer shall include preparing work orders, issuing instructions and supervision as required to permit the particular ground investigation service provider to execute and complete the investigation.

3.3.4 Prior to an Order being issued and when requested by the Director, the Operating Company shall provide for the Director’s consent, a draft Design brief for ground investigations which shall include:

(i) principal technical details,

(ii) principal delivery dates and programme,

(iii) preferred method of procurement for ground investigation services with full justification for the preference including a Value for Money Assessment as if for a Bid,

(iv) schedule of plant and resources including cost estimates,

(v) conflicts of interest,

(vi) access to land,

(vii) details of geotechnical certification route to be followed, and

(viii) any other information required by the Director.

3.3.5 A geotechnical interpretative report, compiled in accordance with the *Manual of Contract Documents for Highway Works,* shall be prepared and incorporated into the Design by the Designer for all earthworks including piling.

The Design check of the earthworks Design including the design check of the interpretative report shall be carried out by a Checker.

Where, in accordance with the *Design Manual for Roads and Bridges* the ground investigation is categorised as category B, the independent check shall be carried out by the Director's appointed independent geotechnical checker. Such independent check shall be completed prior to completion of a Scheme Design and prior to tendering of a Works Contract.

The Operating Company shall forward a copy of the independent check Certificate to the Director upon receiving sign off from the independent geotechnical checker.

3.4 The Staged Procedure for Design Interim Certificates and Design Check Interim Certificates

3.4.1 The parts of a Design or Design Element(s) that require Design Certificates and Design Check Certificates may each be phased in order to:

(i) accommodate the Operating Company's phasing of the Design or the phasing of the Operations, Works or work carried out by others, and

(ii) enable construction of a phased Design or Design Element(s) to proceed.

3.4.2 When a phased method of certification is adopted by the Designer, the following procedure shall apply:

(i) for each phase of a Design or Design Element, the Operating Company shall produce a schedule of the further divided parts of a Design or Design Element that it proposes to certify. Any such schedules shall have the written consent of the Designer and the Checker before being implemented and incorporated into the Design register,

(ii) the Operating Company shall provide and maintain within the Design register the status of all Design Interim Certificates and Design Check Interim Certificates for each phase of the Design or Design Element,

(iii) each Design Interim Certificate for each further phase of the Design or Design Element shall be signed and dated by the Designer and the Operating Company. Each Design Check Interim Certificate shall be signed and dated by the Checker and the Operating Company with original signatures,

(iv) the Design register shall also contain all required completed interim Certificates and include cross-references to locations where all information referred to within the Design Interim Certificate is stored, and

(v) construction of any part of the Operations, Works or work carried out by others for each phase of the Design or Design Element requiring certification shall not commence until the completed Design Interim

Certificates with all associated information are recorded and contained within the Design register.

3.4.3 Once all Design Interim Certificates and Design Check Interim Certificates for a part of a Design or Design Element have been completed, the Operating Company shall complete a Design Certificate and Design Check Certificate.

3.4.4 The Operating Company shall record and maintain in the Design register, the original signed and dated Design Certificates and Design check Certificates for each part of the Design or Design Element with original signatures, along with one copy of all relevant Drawings, schedules and numbered appendices.

The Design register shall also contain all:

(i) Design Interim Certificates,

(ii) Design Certificates,

(iii) completed Design and Design Check Certificates including cross-references to locations where all information referred to within the Certificates is stored, and

(iv) Records kept and maintained including relevant Drawings, schedules and numbers appendices and any other relevant documents.

The Design register shall be stored at the Central Office.

3.5 Information to be provided with Design Certificates, Check Certificates, Design Interim Certificates and Design Check Interim Certificates

3.5.1 The Operating Company shall ensure the scale of any plans, sections and other Drawings are relevant to the part of a Design being certified and show the true disposition of all features that may influence a Design or Design Element including where appropriate:

(i) for fencing and environmental barriers, road restraint systems, drainage, earthworks, road pavement, kerbs, footways and paved areas, signs and road markings, lighting and electrical work, environmental and landscaping, and accommodation work:

(a) plans showing the layout and extent of the certified part of the Design or Design Element,

(b) Drawings showing typical and or specific cross-sections, and

(c) any other schedule or supporting information associated with the part of the Design or Design Element that is listed in the numbered appendices within the specification used in the Works Contract.

(ii) for road layout:

(a) plans of the road layout to a scale of not less than 1:1250 showing road intersections Structures and road interchanges,

(b) longitudinal sections of the Trunk Road and, where relevant, side roads, and

(c) any other schedules or supporting information (including signed off departures from standard) associated with the part of the Design or

Design Element that are listed in the numbered appendices within the specification of a Works Contract, Operations Instruction or Site Operations Instruction,

(iii) for Structures:

(a) all Drawings issued for construction of the Structures.

3.6 Design Construction Completion Certificates

3.6.1 The Operating Company shall complete and sign each construction Certificate detailed in Annex 6.4/A of this Part within five Working Days of completion of the Site construction of the identified part of the Design or Design Element. For the purposes of this Certificate, completion shall be the completion of the Operations excluding the Defects Correction Period, as relevant for the particular Scheme.

3.7 Construction Completion Certificates

3.7.1 The Operating Company shall complete and sign the required construction completion Certificates detailed in Annex 6.4/A of this Part within five Working Days of completion of the Operations or Works.

3.8 Maintenance Certificates

3.8.1 The Operating Company shall complete and sign the Maintenance Certificate detailed in Annex 6.4/A of this Part within five Working Days of completion of the maintenance period of the Operations or Works Contract.

3.9 Design Defects Correction Certificate

3.9.1 The Operating Company shall complete and sign the Design Defects Correction Certificate detailed in Annex 6.4/A of this Part within five Working Days of completion of a correction of a Defect or Non-Conformance relating to a Design or Design Element.

3.10 Consultation Certificate

3.10.1 The Operating Company shall consult and comply with the requirements of any affected third parties including as a minimum ,where appropriate, public bodies, Undertakers, authorities and Relevant Organisations during the execution of this Contract. Upon obtaining written consent from the relevant third party, the Operating Company shall prepare and sign Consultation Certificates countersigned by the appropriate third party.

The Operating Company shall retain all correspondence with such parties confirming such consultations in the Central Office.

3.10.2 The Operating Company shall not commence or procure the commencement of any Operations or Works Contracts that could affect the interests of any third party until this consultation procedure has been completed.

3.11 Road Safety Audit Certificate

3.11.1 When a road safety audit is required, a Road Safety Audit Certificate as provided in Annex 6.4/A of this Part shall be completed and appended to the Design or combined Design and Check Certificate as relevant by the Operating Company.

3.12 Certificate for Departure from Standard or Aspects Not Covered by Standards

3.12.1 The Operating Company shall not incorporate any departure from the requirements stated in the *Design Manual for Roads and Bridges together with any other Scottish Executive or Transport Scotland Interim Amendments.,* the *Manual of Contract Documents for Highway Works* and the *Roads for All: Good Practice Guide for Roads* into a Design, Operations, Works Contract or work until:

(i) written consent has been obtained from the Director, and

(ii) a signed copy of the completed Departure from Standard Certificate has been received from the Director.

3.13 Records and Registers

3.13.1 The Operating Company shall provide, maintain and store within the Central Office from the date a relevant Scheme has been identified:

(i) A register of:

(a) approval in principle form,

(b) Design Certificate,

(c) Design Check Certificate,

(d) Design Interim and Check Certificate,

(e) Design Construction Completion Certificate,

(f) Construction Completion Certificate,

(g) construction Completion Certificate for supervision of Works,

(h) Maintenance Certificate,

(i) Maintenance Certificate (supervision of Works),

(j) Design Defects correction Certificate,

(k) consultation Certificate,

(l) Variation Order/change instruction Certificate,

(m) Road Safety Audit Certificate, and

(n) Departure from Standard Certificates.

The register shall record the current status of all Certificates.

(ii) The original of each Certificate as required, signed and dated by the persons referred to therein.

(iii) All originals of all supporting documents referred to within each register and Certificate required by this Contract.

Such information shall include Drawings, schedules, numbered appendices and any other information required.

3.13.2 The Operating Company shall produce and maintain a register of all Works Contract Instructions in the contract control and management function of the Integrated Roads Information System in accordance with the requirements of Schedule 4 Part 1.

3.13.3 Subject to an Order, for each Works Contract the Operating Company shall execute the following duties and produce the following registers on Site, for inspection at any time by the Director and the Performance Audit Group:

(i) Site instructions,

(ii) variation orders,

(iii) Drawings for the Works including updates certified by the Contract Administrator

(iv) reinforcement schedules,

(v) dayworks Records,

(vi) Certificates,

(vii) payment Records,

(viii) measurement progress including but not limited to dipping Records for each pavement layer to demonstrate correct thickness of each bound and unbound layer,

(ix) extensions of time claimed by the Works Contractor,

(x) extensions of time granted by the Contract Administrator,

(xi) claims for payment by the Works Contractor,

(xii) new Works items and rates and prices,

(xiii) site diaries and test results including but not limited to:

(a) reports on Works Contractor's progress,

(b) weather conditions,

(c) requests for and results of inspections of workmanship,

(d) the Contract Administrator’s confirmation of compliance with the relevant specification at each stage of construction, and

(e) traffic management inspections,

(xiv) the presence of the Engineer's representative on the site of the Works for each day that site work is in progress,

(xv) Health and safety file as required by Schedule 6 Part 2 which shall incorporate any of the above Records on completion of Works on Site, and

(xvi) any other items relevant to any particular Works Contract.

All such registers shall be verified and signed each month by the Operating Company.

On completion of Works, the on-site Records shall be registered in the Works Contract register as required by this Contract.

3.13.4 The Operating Company shall maintain all Records, including material and workmanship testing Certificates, to ensure that it can demonstrate:

(i) that the Works Contractor has complied with the requirements of the Works Contract, or

(ii) that the Operating Company has complied with the requirements of this Contract, for any Scheme carried out as Operations.

3.13.5 Testing certification shall be maintained at the Central Office and shall be available within five Working Days of the test being completed, irrespective of whether it was carried out as Operations or under a Works Contract.

All such testing certification and testing Records shall be maintained in an easily identifiable file separate from other Scheme Records at the Central Office.

Where the testing certification reports a non-conforming product, the Operating Company shall clearly record in the register of Notices of Non-Conformance to be maintained by the Operating Company in accordance with the provisions of this Contract within five Working Days of receipt of the Certificate what action has been taken in relation to the non-conforming product.

This is Annex 6.4/A to Schedule 6 Part 4 referred to in the foregoing Agreement between Scottish Ministers and Amey LG Limited.

SCOTTISH MINISTERS' REQUIREMENTS

SCHEDULE 6 PART 4

DESIGN AND CERTIFICATION OF OPERATIONS AND WORKS

ANNEX 6.4/A – Certificates in Relation to Certification Procedures

SCOTTISH MINISTERS' REQUIREMENTS

SCHEDULE 6 PART 4

DESIGN AND CERTIFICATION OF OPERATIONS AND WORKS

ANNEX 6.4/A – Certificates in Relation to Certification Procedures

CONTENTS

Approval in Principle form and notes (Eurocodes)	Certificate No: AIP1
Approval in Principle form and notes (Non-Eurocodes)	Certificate No: AIP2
Approval in Principle form and notes (M & E Installation)	Certificate No: AIP3
Design Interim Certificate: Structures	Certificate No: DIC(S)
Design Check Interim Certificate: Structures	Certificate No: DCIC(S)
Design Certificate: Structures	Certificate No: DC(S)
Design Check Certificate: Structures	Certificate No: DCC(S)
Design Interim Certificate: Earthworks	Certificate No: DIC(EW)
Design Check Interim Certificate: Earthworks	Certificate No: DCIC(EW)
Design Certificate: Earthworks	Certificate No: DC(EW)
Design Check Certificate: Earthworks	Certificate No: DCC(EW)
Design Interim Certificate: Road Restraint Systems	Certificate No: DIC(RRS)
Design Check Interim Certificate: Road Restraint Systems	Certificate No: DCIC(RRS)
Design Certificate: Road Restraint Systems	Certificate No: DC(RRS)
Design Check Certificate: Road Restraint Systems	Certificate No: DCC(RRS)
Design Interim Certificate: Other Part of Design or Design Element	Certificate No: DIC(*)
Design Check Interim Certificate: Other Part of Design or Design Element	Certificate No: DCIC(*)
Design Certificate: Other Part of Design or Design Element	Certificate No: DC(*)
Design Check Certificate: Other Part of Design or Design Element	Certificate No: DCC(*)
Combined Design and Design Check Certificate	Certificate No: DC/DCC
Road Safety Audit Certificate (as Appendix to DC or DC/DCC)	Certificate No: RSAC
Design Construction Completion Certificate	Certificate No: DCComp
Construction Completion Certificate	Certificate No: CCompC
Construction Completion Certificate for Supervision of Works	Certificate No: CCSupW
Maintenance Certificate	Certificate No: MC
Maintenance Certificate (Supervision of Works)	Certificate No: MCSupW
Design Defects Correction Certificate	Certificate No: DesDCC
Consultation Certificate	Certificate No: ConsultC
Variation Order/Change Instruction Pro-forma	Certificate No: VO/CI

Departure from Standard Certificate Templates

Certificate No: DfS(S)

Certificate No: DfS(R)

NOTE:

(S) denotes Structures certificate

(EW) denotes Earthworks certificate

(RRS) denotes Road Restraint System certificate

(R) denotes Roads certificate

(*) denotes ability to use certificate as part of phased construction activities

MODEL OF CERTIFICATE TO BE USED BY THE OPERATING COMPANY

APPROVAL IN PRINCIPLE

FORM AIP1
Order Reference .....

Scheme Identifier……

APPROVAL IN PRINCIPLE

(Bridge and other Highway Structures), Eurocodes

Name of Project _____

Name of Bridge or Structure _____

Structure Ref No _____

1. HIGHWAY DETAILS

1.1 Type of road

1.2 Permitted traffic speed

1.3 Existing restrictions[1]

2. SITE DETAILS

2.1 Obstacles crossed

3. PROPOSED STRUCTURE

3.1 Description of structure and design working life

3.2 Structural type

3.3 Foundation type

3.4 Span arrangements

3.5 Articulation arrangements

3.6 Classes and levels[2]

3.6. 1 Consequence class

3.6.2 Reliability class

3.6.3 Inspection level

3.7 Road restraint systems requirements

3.8 Proposed arrangements for future maintenance and inspection

3.8.1 Traffic management

3.8.2 Arrangements for future maintenance and inspection of structure. Access arrangements to structure

3.9 Environment and sustainability

3.10 Durability, materials and finishes[3]

3.11 Risks and hazards considered for design, execution, maintenance and demolition. Consultation with and/or agreement from CDM Coordinator[4]

3.12 Estimated cost of proposed structure together with other structural forms considered (including where appropriate proprietary manufactured structure), and the reasons for their rejection (including comparative whole life costs with dates of estimates)

3.13 Proposed arrangements for construction

3.13.1 Construction of structure

3.13.2 Traffic management

3.13.3 Service diversions

3.13.4 Interface with existing structures

4. DESIGN CRITERIA

4.1 Actions

4.1.1 Permanent actions

4.1.2 Snow, wind and thermal actions

4.1.3 Actions relating to normal traffic under AW regulations and C&U regulations[5]

4.1.4 Actions relating to General Order traffic under STGO regulations[6]

4.1.5 Footway or footbridge variable actions

4.1.6 Actions relating to Special Order traffic, provision for exceptional abnormal indivisible loads including location of vehicle track on deck cross-section[7,8]

4.1.7 Accidental actions

4.1.8 Action during construction

4.1.9 Any special action not covered above[9]

4.2 Heavy or high load route requirements and arrangements being made to preserve the route, including any provision for future heavier loads or future widening

4.3 Minimum headroom provided

4.4 Authorities consulted and any special conditions required

4.5 Standards and documents listed in the Technical Approval Schedule

4.6 Proposed Departures relating to departures from standards given in 4.5

4.7 Proposed Departures relating to methods for dealing with aspects not covered by standards in 4.5

5. STRUCTURAL ANALYSIS

5.1 Methods of analysis proposed for superstructure, substructure and foundations[10]

5.2 Description and diagram of idealised structure to be used for analysis

5.3 Assumptions intended for calculation of structural element stiffness

5.4 Proposed range of soil parameters to be used in the design of earth retaining elements

6. GEOTECHNICAL CONDITIONS

6.1 Acceptance of recommendations of the Geotechnical Design Report to be used in the design and reasons for any proposed changes

6.2 Summary of design for structure in the Geotechnical Design Report. Describe foundations fully including the reasons for adoption of allowable and proposed bearing pressures/pile loads, strata in which foundations are located, provision for skin friction effects on piles and for lateral pressures due to compression of underlying strata.

6.3 Differential settlement to be allowed for in the design of the structure

6.4 Anticipated ground movements or settlement due to embankment loading, mineral extraction, flowing water, and measures proposed to deal with these effects as far as they affect the structure.

6.5 If the Geotechnical Design Report is not yet available, state when the results are expected and list the sources of information used to justify the preliminary choice of foundations[11]

6.6 Results of groundwater tests and any counteracting measures proposed.

7. CHECK

7.1 Proposed Category and Design Supervision Level

7.2 If Category 3, name of proposed Independent Checker

7.3 Erection proposals or temporary works for which Types S and P Proposals will be required, listing structural parts of the permanent structure affected with reasons

8. DRAWINGS AND DOCUMENTS

8.1 List of drawings (including numbers) and documents accompanying the submission[12]

9. THE ABOVE IS SUBMITTED FOR ACCEPTANCE

We confirm that details of the temporary works design will be/have* been passed to the permanent works Designer for review.[13]

Signed ..... Firm …….

Name ..... Date ……..

Design Team Leader

Name

Engineering Qualifications .....[14]

Name of Organisation .....

Date .....

Signed ..... …..

(On behalf of the Operating Company)

Name …… Date .....

(Block Capitals)

10. THE ABOVE DEPARTURES FROM STANDARDS / ASPECTS FROM STANDARDS ARE REJECTED / AGREED

Signed .....

Chief Bridge Engineer

Name ..... Date .....
(Block Capitals)

11. THE ABOVE IS ACCEPTED SUBJECT TO THE AMENDMENTS AND CONDITIONS SHOWN BELOW

Signed .....

Name ..... Date .....
(Block Capitals)

Position Held .....

Engineering Qualifications .....

Date .....

* Delete as appropriate

INSTRUCTIONS FOR THE OPERATING COMPANY'S COMPLETION OF APPROVAL IN PRINCIPAL FORM AIP1 AND ASSOCIATED DOCUMENTS

The form AIP1 shall be completed and submitted in accordance with BD 2 of Design Manual for Roads and Bridges, using the form as amended within this schedule.

BD 2 Annex A, Annexes A2 to A6 are not required.

Specific notes for completion of AIP1

1. Include weight, height, width and any environmental restriction at or adjacent to the bridge.
2. State the classes and levels for the whole structure, as well as those for the individual structural elements if higher or lower.
3. For concrete structures, give applicable exposure classes for particular structural elements. For all material strengths given, list the relevant codes/standards.
4. Designers should name the CDM co-ordinator and confirm that the CDM co-ordinator has reviewed the risks and hazards identified in the AIP and is satisfied. See also clause 2.12(i), (ii) and (iii) of BD 2.
5. E.g. Load models 1 and 2, BS EN 1991-2.
6. E.g. SV model vehicle in Load Model 3, BS EN 1991-2.
7. E.g. SOV model vehicle in Load Model 3, BS EN 1991-2 and/or individual vehicle which includes the following information as applicable:
   a) Gross weight of the vehicle in tonnes and vehicle type and number.
   b) Axle load and spacings (longitudinally and transversely)
   c) Air cushion in tonnes over area applied (in metres, longitudinally and transversely)
   d) Single or twin tyres and wheel contact areas
8. If in doubt, the heavy or high load route requirements should be confirmed by consulting Transport Scotland.
9. E.g. seismic action, atmospheric icing, floating debris etc.
10. List the main structural elements for superstructure, substructure and foundation. If the designs of the superstructure, substructure and/or foundation are carried out by different teams, refer to clause 2.22 and 2.42 of BD2.
11. When the Geotechnical Design Report becomes available, an addendum to the AIP, covering section 6, must be submitted to the TAA. The addendum must have its own sections 8, 9 and 10 to provide a list of drawings, documents and signatures.
12. Include without limitation:
    a) Technical Approval Schedule (TAS), including Scottish Addenda and Transport Scotland Interim Amendments. Standards which apply shall be clearly identified by striking through those which do not apply.
    b) General Arrangement Drawing
    c) Relevant extracts from the Geotechnical Design Report
    d) Departures
    e) Relevant correspondence and documents from consultations
13. This statement is applicable to temporary works design AIP only.
14. CEng, MICE or CEng, MIStructE

An AiP is valid for three years after the date of agreement by Transport Scotland. If the construction has not yet commenced within this period, the AiP must be re-submitted to Transport Scotland for review.

APPROVAL IN PRINCIPLE

FORM AIP2
Order Reference .....

Scheme Identifier……

APPROVAL IN PRINCIPLE

(Bridge and other Highway Structures), Non-Eurocodes

Name of Project _____

Name of Bridge or Structure _____

Structure Ref No _____

1. ROAD DETAILS

1.1 Type of road

1.2 Permitted traffic speed

1.3 Existing restrictions[1]

2. SITE DETAILS

2.1 Obstacles crossed

3. PROPOSED STRUCTURE

3.1 Description of structure and design working life

3.2 Structural type

3.3 Foundation type

3.4 Span arrangements

3.5 Articulation arrangements

3.6 Road restraint systems requirements

3.7 Proposed arrangements for future maintenance and inspection/Inspection for Assessment

3.7.1 Traffic management

3.7.2 Arrangements for future maintenance and inspection of structure. Access arrangements to structure

3.7.3 Intrusive or further investigations proposed

3.8 Environment and sustainability

3.9 Durability, materials and finishes/materials strengths assumed and basis of assumptions[2]

3.10 Risks and hazards considered for design, execution, maintenance and demolition. Consultation with and/or agreement from CDM Coordinator[3]

3.11 Estimated cost of proposed structure, together with other structural forms considered (including where appropriate proprietary manufactured structure), and the reasons for their rejection (including comparative whole life costs with dates of estimates)

3.12 Proposed arrangements for construction

3.12.1 Construction of structure

3.12.2 Traffic management

3.12.3 Service diversions

3.12.4 Interface with existing structures

3.13 Year of construction

3.14 Reason for assessment

3.15 Part of structure to be assessed

4. DESIGN/ASSESSMENT CRITERIA

4.1 Loading

4.1.1 Permanent loads

4.1.2 Snow, Wind and Thermal loads

4.1.3 Loads relating to normal traffic under AW regulations and C&U regulations[4]

4.1.4 Loads relating to General Order traffic under STGO regulations[5]

4.1.5 Footway or footbridge variable loading

4.1.6 Loads relating to Special Order traffic, provision for exceptional abnormal indivisible loads including location of vehicle track on deck cross-section[6]

4.1.7 Accidental loads

4.1.8 Loads during construction

4.1.9 Any special loading not covered above[7]

4.2 Heavy or high load route requirements and arrangements being made to preserve the route, including any provision for future heavier loads or future widening[8]

4.3 Minimum headroom provided

4.4 Authorities consulted and any special conditions required

4.5 Standards and documents listed in the Technical Approval Schedule

4.6 Proposed Departures relating to departures from standards given in 4.5

4.7 Proposed Departures relating to methods for dealing with aspects not covered by standards in 4.5

5. STRUCTURAL ANALYSIS

5.1 Methods of analysis proposed for superstructure, substructure and foundations[9,10]

5.2 Description and diagram of idealised structure to be used for analysis

5.3 Assumptions intended for calculation of structural element stiffness

5.4 Proposed range of soil parameters to be used in the design/assessment* of earth retaining elements

6. GEOTECHNICAL CONDITIONS

6.1 Acceptance of recommendations of the Geotechnical Design Report to be used in the design/assessment'* and reasons for any proposed changes

6.2 Summary of design for highway structure in Geotechnical Design Report Describe foundations fully including the reasons for adoption of allowable and proposed bearing pressures/pile loads, strata in which foundations are located, provision for skin friction effects on piles and for lateral pressures due to compression of underlying strata

6.3 Differential settlement to be allowed for in the design/assessment'* of the structure 6.4[D] If the Geotechnical Design Report is not yet available, state when the results are expected and list the sources of information used to justify the preliminary choice of foundations[12]

6.5 Anticipated ground movements or settlement due to embankment loading, mineral extraction, flowing water, and measures proposed to deal with these effects as far as they affect the structure

6.6 Results of groundwater tests and any counteracting measures proposed

7. CHECK

7.1 Proposed Category

7.2 If Category 3, name of proposed independent Checker

7.3[D] Erection proposals or temporary works for which Types Sand P Proposals will be required, listing structural parts of the permanent structure affected with reasons

8. DRAWINGS AND DOCUMENTS

8.1 List of drawings (including numbers) and documents accompanying the submission[13]

8.2[A] List of construction and record drawings (including numbers) to be used in the assessment[14]

8.3[A] List of pile driving or other construction records

8.4[A] List of previous inspection and assessment reports

9. THE ABOVE IS SUBMITTED FOR ACCEPTANCE

We confirm that details of the temporary works design will be/have* been passed to the permanent works Designer for review.[15]

Signed .....

Name .....

Designer/Assessment* Team leader

Engineering Qualifications .....[16]

Name of Organisation .....

Date .....

(On behalf of the Operating Company)

Name …… Date .....

(Block Capitals)

10. THE ABOVE DEPARTURES FROM STANDARDS / ASPECTS FROM STANDARDS ARE REJECTED / AGREED

Signed .....

Chief Bridge Engineer

Name ..... Date .....
(Block Capitals)

11. THE ABOVE IS ACCEPTED SUBJECT TO THE AMENDMENTS AND CONDITIONS SHOWN BELOW

Signed .....

Name ..... Date .....
(Block Capitals)

Position Held .....

Engineering Qualifications .....

Date .....

D = Design, A=Assessment * Delete as appropriate

INSTRUCTIONS FOR THE OPERATING COMPANIES COMPLETION OF APPROVAL IN PRINCIPAL FORM AIP2 AND ASSOCIATED DOCUMENTS

The form AIP2 shall be completed and submitted in accordance with BD 2 of Design Manual for Roads and Bridges, using the form as amended within this schedule.

BD 2 Annex A, Annexes A2 to A6 are not required.

Specific notes for completion of TA 1(b):

1. Include weight, height, width and any environmental restriction at or adjacent to the bridge.
2. In cases of design, give applicable exposure classes for particular concrete structural elements. In cases of assessment, give material strengths from record drawings or intrusive investigation. For all material strengths given, list the relevant codes/standards.
3. Designers should name the CDM co-ordinator and confirm that the CDM co-ordinator has reviewed the risks and hazards identified in the AIP and is satisfied. See also clause 2.12(i), (ii) and (iii) of BD 2.
4. E.g. HA loading to BD37
5. E.g. HB loading to BD37 or SV loading to BS EN 1991-2.
6. E.g. Individual vehicle which includes the following information as applicable:
   a) Gross weight of the vehicle in tonnes and vehicle type and number.
   b) Axle load and spacings (longitudinally and transversely)
   c) Air cushion in tonnes over area applied (in metres, longitudinally and transversely)
   d) Single or twin tyres and wheel contact areas
7. E.g seismic loading, atmospheric icing, floating debris etc.
8. If in doubt, the heavy or high load route requirements should be confirmed by consulting Transport Scotland.
9. List the main structural elements for superstructure, substructure and foundation. If the designs of the superstructure, substructure and/or foundation are carried out by different teams, refer to clause 2.22 and 2.42 of BD2.
10. Factors of safety are required where limit state design codes for bridges are not used. See clause 4.17(e) of BD2.
11. Where no such geotechnical information is available, suggested earth pressure coefficient values given in relevant DMRB parts should be used.
12. When the results of the ground investigation become available, an addendum to the AiP, covering section 6, must be submitted to Transport Scotland. The addendum must have its own sections 8, 9 and 10 to provide a list of drawings, documents and signatures.
13. Include without limitation:
    a) Technical Approval Schedule (TAS), including Scottish Addenda and Transport Scotland Interim AmendmentsStandards which apply shall be clearly identified by striking through those which do not apply.
    b) General Arrangement Drawing
    c) Relevant extracts from the Geotechnical Design Report, Inspection Report, Intrusive Investigation Report, Previous Assessment Report (or reference for Report)
    d) Departures
    e) Relevant correspondence and documents from consultations
14. Include details of previous structural maintenance and/or strengthening works.

15. This statement is applicable to temporary works design AIP only.

16. CEng, MICE or CEng, MIStructE

An AiP is valid for three years after the date of agreement by Transport Scotland. If the construction has not yet commenced within this period, the AiP must be re-submitted to Transport Scotland for review.

APPROVAL IN PRINCIPLE **FORM AIP3**

Order Reference .....

Scheme Identifier……

APPROVAL IN PRINCIPLE

(M&E Installation)

Name of Project _____

Name of Bridge or Structure _____

Structure Ref No _____

1. HIGHWAY DETAILS

1.1 Type of Road (from TD 27)

1.2 Permitted traffic speed

2. STRUCTURE DETAILS

2.1 Brief description of structure

2.2 Date of AIP for structure

3. GENERAL DESCRIPTION OF MECHANICAL AND ELECTRICAL INSTALLATION (M&E)

3.1 Proposed mode of operation of structure

3.2 Location of operating and control mechanism

3.3 Electrical power supply and distribution

3.4 Stand-by-power facilities (UPS etc.)

3.5 Design working life, whole life cost and sustainabi1ity considerations

4. OPERATIONAL DESIGN CRITERIA (As relevant)

4.1 Variable actions

4.2 Traffic actions

4.3 Snow actions

4.4 Wind actions

4.5 Thermal actions including temperature range.

4.6 Any Special actions not listed above (eg. ship impact)

4.7 List of relevant Safety Consultation documents

4.7.1 Additional relevant standards and publications

4.8 Proposed Departures relating to Departures from Standards given in 4.7 and 4.7.1

4.9 Proposed Departures relating to methods of dealing with aspects not covered by Standards in 4.7 and 4.7.1

5. BASIS OF OPERATION AND CONTROL

5.1 Normal operation conditions

5.2 Authorities consulted

5.3 State any special requirements imposed during liaison with such authorities

5.4 Describe communications system involved

5.5 Design requirements for emergency works testing and site operating conditions

5.6 Fail safe operation safety systems, failure and mode effect (FME) analysis

5.7 Arrangements for commissioning and handover to maintaining authority including relevant documentation, operators' manuals

6. PLANT ROOM

6.1 General layout

6.2 Drainage and associated pumping requirements

6.3 Plant room environment; heating, lighting, humidity, ventilation

6.4 Mechanical and electrical equipping

6.5 Security; intruder and fire alarm systems

6.6 Proposed fire fighting measures

7. DESCRIPTION OF INSPECTION AND MAINTENANCE ARRANGEMENTS

7.1 Proposals for inspection and maintenance of the moveable bridge structure or gantry are given in the AIP for the structure

7.2 Proposals for inspection and maintenance of M&E installation

7.3 Proposed documentation

7.4 Proposals for plant monitoring, data collection and management

8. CHECK

8.1 M&E installation to be Category 3

8.2 Name of proposed independent Checker

9. DRAWINGS AND DOCUMENTS

9.1 List of drawings and documents (including numbers) accompanying the submission.

9.2 List of documents relating to inspection, maintenance and safe operation

10. THE ABOVE IS SUBMITTED FOR ACCEPTANCE

Signed .....

Name .....

Designer/Assessment* Team Leader

Engineering Qualifications .....

Name of Organisation .....

Date .....

(On behalf of the Operating Company)

Name …… Date .....

(Block Capitals)

11. THE ABOVE DEPARTURES FROM STANDARDS / ASPECTS FROM STANDARDS ARE REJECTED / AGREED

Signed .....

Chief Bridge Engineer

Name ..... Date .....
(Block Capitals)

12. THE ABOVE IS ACCEPTED SUBJECT TO THE AMENDMENTS AND CONDITIONS SHOWN BELOW

Signed .....

Name .....

(Block Capitals)

Position Held .....

Engineering Qualifications .....

Date .....

D = Design, A=Assessment * Delete as appropriate

MODEL CERTIFICATE TO BE USED BY THE OPERATING COMPANY

DESIGN INTERIM CERTIFICATE: STRUCTURES **CERTIFICATE No: DIC(S)……..**

Structure No.....

Structure Name..... **Scheme Identifier.....**

1. We hereby certify to the Scottish Ministers in respect of the design of the following further divided part of the Design or Design Element namely:

..... **(Name of further divided part of Structure)**

..... **(Name of Structure)**

that reasonable professional skill and care has been taken by us with a view to securing that the further divided part of the Design or Design Element:

(i) complies with the Scottish Ministers' Requirements

(ii) complies with Approval in Principle (AIP)

(iii) complies with the Manual of Contract Documents for Highway Works (MCHW)

(iv) has been accurately translated into the construction Drawings and bar bending schedules bearing the unique numbers listed below:

(v) shall not be detrimental to the whole Design or Design Element and shall not affect the completion of the Design Certificate(s).

We agree that the words and phrases herein, unless otherwise stated, have the same meaning as attributed to them in the Contract between the Scottish Ministers and the Operating Company.

Signed: ..... Firm: .....

DESIGNER (Team leader for Designer)

Name: ..... Date: .....

(Block Capitals)

Signed: ..... Firm: .....

(On behalf of the Operating Company)

Name: ..... Date: .....

(Block Capitals)

2. The certificate is accepted by the Scottish Ministers

Signed _____

Name _____

Position held _____

Engineering Qualifications _____

TAA _____

Date _____

MODEL OF CERTIFICATE TO BE USED BY THE OPERATING COMPANY

DESIGN CHECK INTERIM CERTIFICATE: STRUCTURES **CERTIFICATE NO: DCIC(S).....**

Structure No……

Structure Name…….. Scheme Identifier…….

1. We hereby certify to the Scottish Ministers in respect of the check of the following further divided part for the Design or Design Element namely:

..... (Name of further divided part of Structure)

..... (Name of Structure)

that reasonable professional skill and care has been taken by us in carrying out the independent Design check of the part of the Design or Design Element with a view to securing that the further divided part of the Design or Design Element:

(i) complies with the Scottish Ministers' Requirements.

(ii) complies with Approval in Principle (AIP)

(iii) complies with the Manual of Contract Documents for Highway Works (MCHW)

(iv) has been accurately translated into the construction Drawings and bar bending schedules bearing the unique numbers listed below:

(v) shall not be detrimental to the whole Design or Design Element and shall not affect the completion of the Check Certificate(s).

We agree that the words and phrases herein, unless otherwise stated, have the same meaning as attributed to them in the Contract between the Scottish Ministers and the Operating Company

Signed: ..... Firm: .....

CHECKER (Team leader for Checker)

Name: ..... Date: .....

(Block Capitals)

Signed: ..... Firm: .....

(On behalf of the Operating Company)

Name: ..... Date .....

(Block Capitals)

2. The certificate is accepted by the Scottish Ministers

Signed _____

Name _____

Position held _____

Engineering Qualifications _____

TAA _____

Date _____

MODEL OF CERTIFICATE TO BE USED BY THE OPERATING COMPANY

DESIGN CERTIFICATE: STRUCTURES **CERTIFICATE NO: DC(S).....**

Structure No…….

Structure Name……... **Scheme Identifier…….**

1. We hereby certify to the Scottish Ministers in respect of the design of the following part of the Design or Design Element namely

.....

(Name of Structure)

that reasonable professional skill and care has been taken by us with a view to securing that the part of the Design or Design Element:

(i) complies with the Scottish Ministers' Requirements.

(ii) complies with Approval in Principle AIP [1] OR the following standards:

(iii) complies with the Manual of Contract Documents for Highway Works (MCHW)

(iv) has been accurately translated into the construction Drawings and bar bending schedules bearing the unique numbers listed below OR the assessed capacity of the structure is as follows[2]:

(v) shall not be detrimental to the whole Design or Design Element.

(vi) where required a Safety Audit Certificate for Stage *[2] *[3] is attached

We agree that the words and phrases herein, unless otherwise stated, have the same meaning as attributed to them in the Contract between the Scottish Ministers and the Operating Company

Signed: ..... Firm: .....

DESIGNER (Team leader for Designer)

Name: ..... Date: .....
(Block Capitals)

Engineering Qualifications[3] .....

Signed: ..... Firm: .....

(On behalf of the Operating Company)

Name: ..... Date: .....

(Block Capitals)

2. The Departures from Standard and additional criteria given in paragraph 1 are agreed[4]

3. The certificate is accepted by the Scottish Ministers

Signed	_____
Name	_____
Position held	_____
Engineering Qualifications[5]	_____
TAA	_____
Date	_____

Notes

1. List any Departures and additional methods, criteria or specification clauses.
2. Delete as appropriate
3. CEng MICE or CEng MIStructE
4. Delete as appropriate. Not permitted for Cat 0 or Cat 1 unless Transport Scotland consider that the Departure has little or no structural implication.
5. CEng MICE or CEng MIStructE

MODEL OF CERTIFICATE TO BE USED BY THE OPERATING COMPANY

DESIGN CHECK CERTIFICATE: STRUCTURES CERTIFICATE NO: DCC(S).....

Structure No……

Structure Name……. Scheme Identifier……

1. We hereby certify to the Scottish Ministers in respect of the check of the following part of the Design or Design Element namely

.....

(Name of Structure)

that reasonable professional skill and care has been taken by us in carrying out the independent Design check of the part of the Design or Design Element with a view to securing that the part of the Design or Design Element:

(i) complies with the Scottish Ministers' Requirements.

(ii) complies with Approval in Principle AIP [1] OR the following standards:

(iii) complies with the Manual of Contract Documents for Highway Works (MCHW)

(iv) has been accurately translated into the construction Drawings and bar bending schedules bearing the unique numbers listed below OR the assessed capacity of the structure is as follows[2]:

(iv) shall not be detrimental to the whole Design or Design Element.

We agree that the words and phrases herein, unless otherwise stated, have the same meaning as attributed to them in the Contract between the Scottish Ministers and the Operating Company

Signed: ..... Firm: .....

CHECKER (Team leader for Checker)

Name: ..... Date: .....
(Block Capitals)

Engineering Qualifications[3] .....

Signed: ..... Firm: .....

(On behalf of the Operating Company)

Name: ..... Date: .....
(Block Capitals)

2. The Departures from Standard and additional criteria given in paragraph 1 are agreed[4]

3. The certificate is accepted by the Scottish Ministers

Signed	_____
Name	_____
Position held	_____
Engineering Qualifications[5]	_____
TAA	_____
Date	_____

Notes

1. List any Departures and additional methods, criteria or specification clauses.
2. Delete as appropriate
3. CEng MICE or CEng MIStructE
4. Delete as appropriate. Not permitted for Cat 0 or Cat 1 unless Transport Scotland consider that the Departure has little or no structural implication.
5. CEng MICE or CEng MIStructE

MODEL OF CERTIFICATE TO BE USED BY THE OPERATING COMPANY

DESIGN INTERIM CERTIFICATE: EARTHWORKS CERTIFICATE NO: DIC(EW).....

Order Reference……

Scheme Identifier…….

1. We hereby certify to the Scottish Ministers in respect of the design of the following further divided part of the Design or Design Element namely

.....……..

(Name of further divided part of the Earthworks)

.....……..

(Name of part of Earthworks or Earthworks Element)

that reasonable professional skill and care has been taken by us with a view to securing that the further divided part of the Design or Design Element:

(i) complies with the Scottish Ministers' Requirements.

(ii) has been accurately translated into the construction Drawings and other Design documents bearing the unique numbers listed below:

(iii) shall not be detrimental to the Whole Design or Design Element shall not affect the completion of the Design Certificate(s).

(iv) has been the subject of an interpretative geotechnical report and that the conclusions of that report have been taken into account in the Design or Design Element.

We agree that the words and phrases herein, unless otherwise stated, have the same meaning as attributed to them in the Contract between the Scottish Ministers and the Operating Company

Signed: ..... Firm: .....

DESIGNER (Team leader for Designer)

Name: ..... Date: .....

(Block Capitals)

Signed: ..... Firm: .....

(On behalf of the Operating Company)

Name: ..... Date: .....

(Block Capitals)

MODEL OF CERTIFICATE TO BE USED BY THE OPERATING COMPANY

DESIGN CHECK INTERIM CERTIFICATE: EARTHWORKS CERTIFICATE NO: DCIC(EW).....

Order Reference……..

Scheme Identifier…….

1. We hereby certify to the Scottish Ministers in respect of the check of the following further divided part of the Design or Design Element namely

.....……

(Name of further divided part of the Earthworks)

.....……..

(Name of part of Earthworks or Earthworks Element)

that reasonable professional skill and care has been taken by us in carrying out the independent Design check of the Design or Design Element (including the interpretative geotechnical report referred to in (iv) below) with a view to securing that the further divided part of the Design or Design Element:

(i) complies with the Scottish Ministers' Requirements

(ii) has been accurately translated into the construction Drawings and other Design documents bearing the unique numbers listed below:

(iii) shall not be detrimental to the whole Design or Design Element and shall not affect the completion of the Check Certificate(s)

(iv) has been the subject of an interpretative geotechnical report and that the conclusions of that report have been taken into account in the Design or Design Element.

We agree that the words and phrases herein, unless otherwise stated, have the same meaning as attributed to them in the Contract between the Scottish Ministers and the Operating Company

Signed: ..... Firm: .....

CHECKER (Team leader for Checker)

Name: ..... Date: .....

(Block Capitals)

Signed: ..... Firm: .....

(On behalf of the Operating Company)

Name: ..... Date: .....

(Block Capitals)

MODEL OF CERTIFICATE TO BE USED BY THE OPERATING COMPANY

DESIGN CERTIFICATE: EARTHWORKS **CERTIFICATE NO: DC(EW).....**

Order Reference.....

Scheme Identifier..……

1. We hereby certify to the Scottish Ministers in respect of the design of the following part of the Design or Design Element namely

.....

(Name of Earthworks or Earthwork's Element)

that reasonable professional skill and care has been taken by us with a view to securing that the part of the Design or Design Element:

(i) complies with the Scottish Ministers' Requirements.

(ii) has been accurately translated into the construction Drawings and other Design documents bearing the unique numbers listed below:

(iii) shall not be detrimental to the whole Design or Design Element.

(iv) has been the subject of an interpretative geotechnical report and that the conclusions of that report have been taken into account in the Design or Design Element.

We agree that the words and phrases herein, unless otherwise stated, have the same meaning as attributed to them in the Contract between the Scottish Ministers and the Operating Company

Signed: ..... Firm: .....

DESIGNER (Team leader for Designer)

Name: ..... Date: .....

(Block Capitals)

Signed: ..... Firm: .....

(On behalf of the Operating Company)

Name: ..... Date: .....

(Block Capitals)

MODEL OF CERTIFICATE TO BE USED BY THE OPERATING COMPANY

DESIGN CHECK CERTIFICATE: EARTHWORKS CERTIFICATE NO: DCC(EW).....

Order Reference .....

Scheme Identifier.……

1. We hereby certify to the Scottish Ministers in respect of the check of the following part of the Design or Design Element namely

.....……..

(Name of Earthworks or Earthworks Element)

that reasonable professional skill and care has been taken by us in carrying out the independent Design check of the Design or Design Element (including the interpretative geotechnical report referred to in (iv) below) with a view to securing that the part of the Design or Design Element:

(i) complies with the Scottish Ministers' Requirements.

(ii) has been accurately translated into the construction Drawings and other Design documents bearing the unique numbers listed below:

(iii) shall not be detrimental to the whole Design or Design Element.

(iv) has been the subject of an interpretative geotechnical report and that the conclusions of that report have been taken into account in the Design or Design Element.

We agree that the words and phrases herein, unless otherwise stated, have the same meaning as attributed to them in the Contract between the Scottish Ministers and the Operating Company

Signed: ..... Firm: .....

CHECKER (Team leader for Checker)

Name: ..... Date: .....

(Block Capitals)

Signed: ..... Firm: .....

(On behalf of the Operating Company)

Name: ..... Date .....

(Block Capitals)

MODEL OF CERTIFICATE TO BE USED BY THE OPERATING COMPANY

DESIGN INTERIM CERTIFICATE: ROAD RESTRAINT SYSTEMS CERTIFICATE NO: DIC(RRS)...

Order Reference ….....

Scheme Identifier……..

1. We hereby certify to the Scottish Ministers in respect of the design of the following further divided part of the Design or Design Element namely

.....……..

(Name of further divided part of Safety Road Restraint System or Element)

.....……..

(Name of part of Road Restraint System or Element)

that reasonable professional skill and care has been taken by us with a view to securing that the further divided part of the Design or Design Element:

(i) complies with the Scottish Ministers' Requirements.

(ii) has been accurately translated into the construction Drawings and other Design documents bearing the unique numbers listed below:

(iii) shall not be detrimental to the whole Design or Design Element and shall not affect the completion of the Design Certificate(s).

(iv) that all aspects of the Design or Design Element of the Road Restraint System on the Contract have been developed by the use of a risk assessment approach.

We agree that the words and phrases herein, unless otherwise stated, have the same meaning as attributed to them in the Contract between the Scottish Ministers and the Operating Company

Signed: ..... Firm: .....

DESIGNER (Team leader for Designer)

Name: ..... Date: .....

(Block Capitals)

Signed: ..... Firm: .....

(On behalf of the Operating Company)

Name: ..... Date: .....

(Block Capitals)

MODEL OF CERTIFICATE TO BE USED BY THE OPERATING COMPANY

DESIGN CHECK INTERIM CERTIFICATE: ROAD RESTRAINT SYSTEMS CERTIFICATE NO: DCIC(RRS).....

Order Reference .....

Scheme Identifier……

1. We hereby certify to the Scottish Ministers in respect of the check of the following further divided part of the Design or Design Element namely

.....……..

(Name of further divided part of Road Restraint System or Element)

.....……..

(Name of part of Road Restraint System or Element)

that reasonable professional skill and care has been taken by us in carrying out the independent Design check of the Design or Design Element with a view to securing that the further divided part of the Design or Design Element:

(i) complies with the Scottish Ministers' Requirements.

(ii) has been accurately translated into the construction Drawings and other design documents bearing the unique numbers listed below:

(iii) shall not be detrimental to the whole Design or Design Element and shall not affect the completion of the Check Certificate(s).

(iv) that all aspects of the Design or Design Element of the Road Restraint System on the Contract have been developed by the use of a risk assessment approach.

We agree that the words and phrases herein, unless otherwise stated, have the same meaning as attributed to them in the Contract between the Scottish Ministers and the Operating Company

Signed: ..... Firm: .....

CHECKER (Team leader for Checker)

Name: ..... Date: .....

(Block Capitals)

Signed: ..... Firm: .....

(On behalf of the Operating Company)

Name: ..... Date: .....

(Block Capitals)

MODEL OF CERTIFICATE TO BE USED BY THE OPERATING COMPANY

DESIGN CERTIFICATE: ROAD RESTRAINT SYSTEMS CERTIFICATE NO: DC(RRS).....

Order Reference .....

Scheme Identifier…..……

1. We hereby certify to the Scottish Ministers in respect of the design of the following part of the Design or Design Element namely

.....……..

(Name of Part of Road Restraint System or Element)

that reasonable professional skill and care has been taken by us with a view to securing that the part of the Design or Design Element:

(i) complies with the Scottish Ministers' Requirements.

(ii) has been accurately translated into the construction Drawings and other Design documents bearing the unique numbers listed below:

(iii) shall not be detrimental to the whole Design or Design Element and shall not affect the completion of the Design Certificate(s).

(iv) that all aspects of the Design or Design Element of the Road Restraint System on the Contract have been developed by the use of a risk assessment approach.

iv) where required a Safety Audit Certificate for Stage *[2] *[3] is attached

* *delete as appropriate*

We agree that the words and phrases herein, unless otherwise stated, have the same meaning as attributed to them in the Contract between the Scottish Ministers and the Operating Company

Signed: ..... Firm: .....

DESIGNER (Team leader for Designer)

Name: ..... Date: .....

(Block Capitals)

Signed: ..... Firm: .....

(On behalf of the Operating Company)

Name: ..... Date: .....

(Block Capitals)

MODEL OF CERTIFICATE TO BE USED BY THE OPERATING COMPANY

DESIGN CHECK CERTIFICATE: ROAD RESTRAINT SYSTEMS CERTIFICATE NO: DCC(RRS)..

Order Reference .....

Scheme Identifier…..……..

1. We hereby certify to the Scottish Ministers in respect of the check of the following part of the Design or Design Element namely

.....……..

(Name of Part of the Road Restraint System or Element)

that reasonable professional skill and care has been taken by us in carrying out the independent Design check of the part of the Design or Design Element with a view to securing that the part of the Design or Design Element:

(i) complies with the Scottish Ministers' Requirements.

(ii) has been accurately translated into the construction Drawings and other Design documents bearing the unique numbers listed below:

(iii) shall not be detrimental to the whole Design or Design Element

(iv) that all aspects of the Design or Design Element of the Road Restraint System on the Contract have been developed by the use of a risk assessment approach.

We agree that the words and phrases herein, unless otherwise stated, have the same meaning as attributed to them in the Contract between the Scottish Ministers and the Operating Company

Signed: ..... Firm: .....

CHECKER (Team leader for Checker)

Name: ..... Date: .....

(Block Capitals)

Signed: ..... Firm: .....

(On behalf of the Operating Company)

Name..... Date ……...

(Block Capitals)

MODEL OF CERTIFICATE TO BE USED BY THE OPERATING COMPANY

DESIGN INTERIM CERTIFICATE: **CERTIFICATE NO: DIC(*).....**

OTHER PART OF DESIGN OR DESIGN ELEMENT

Order Reference .....

Scheme Identifier…..……

1. We hereby certify to the Scottish Ministers in respect of the design of the following part of the Design or Design Element namely:

.....……..

(Name of further divided part of Design or Design Element)

.....……

(Name of Part of the Design or Design Element)

that reasonable professional skill and care has been taken by us with a view to securing that the further divided part of the Design or Design Element:

(i) complies with the Scottish Ministers' Requirements.

(ii) has been accurately translated into the construction Drawings and other Design documents bearing the unique numbers listed below:

(iii) shall not be detrimental to the whole Design or Design Element and shall not affect the completion of the Design Certificate.

We agree that the words and phrases herein, unless otherwise stated, have the same meaning as attributed to them in the Contract between the Scottish Ministers and the Operating Company

Signed: ..... Firm: .....

DESIGNER (Team leader for Designer)

Name: ..... Date: .....

(Block Capitals)

Signed: ..... Firm: .....

(Operating Company)

Name: ..... Date: .....

(Block Capitals)

* Insert Description of part of Design or Design Element:

Accommodation Works	(A)	Lighting and Electrical Works	(L)
Drainage	(D)	Road Pavements	(P)
Environmental and Landscaping	(E)	Road Layout	(RL)
Earthworks	(EW)	Signs and Road Markings	(SRM)
Fencing and Environmental Barriers	(F)	Piling	(X)
Kerbs, Footways and Paved Areas	(K)	Any other relevant parts of Design or Design Element	(Y)

MODEL OF CERTIFICATE TO BE USED BY THE OPERATING COMPANY

DESIGN CHECK INTERIM CERTIFICATE: **CERTIFICATE NO: DCIC(*).....**

OTHER PART OF DESIGN OR DESIGN ELEMENT

Order Reference .....

Scheme Identifier……..

1. We hereby certify to the Scottish Ministers in respect of the check of the following further divided part of the Design or Design Element namely:

.....……..

(Name of further divided part of Design or Design Element)

.....……

(Name of Part of the Design or Design Element)

that reasonable professional skill and care has been taken by us in carrying out the independent Design check of the further divided part of the Design or Design Element with a view to securing that the further divided part of the Design or Design Element:

(i) complies with the Scottish Ministers' Requirements.

(ii) has been accurately translated into the construction Drawings and other Design documents bearing the unique numbers listed below:

(iii) shall not be detrimental to the whole Design or Design Element and shall not affect the completion of the Design Certificate.

We agree that the words and phrases herein, unless otherwise stated, have the same meaning as attributed to them in the Contract between the Scottish Ministers and the Operating Company

Signed: ..... Firm: .....

CHECKER (Team leader for Checker)

Name: ..... Date: .....

(Block Capitals)

Signed: ..... Firm: .....

(Operating Company)

Name: ..... Date: .....

(Block Capitals)

* Insert Description of part of Design or Design Element:

Accommodation Works	(A)	Lighting and Electrical Works	(L)
Drainage	(D)	Road Pavements	(P)
Environmental and Landscaping	(E)	Road Layout	(RL)
Earthworks	(EW)	Signs and Road Markings	(SRM)
Fencing and Environmental Barriers	(F)	Piling	(X)
Kerbs, Footways and Paved Areas	(K)	Any other relevant parts of Design or Design Element	(Y)

MODEL OF CERTIFICATE TO BE USED BY THE OPERATING COMPANY

DESIGN CERTIFICATE: **CERTIFICATE NO: DC(*).....**

OTHER PART OF DESIGN OR DESIGN ELEMENT

Order Reference .....

Scheme Identifier……

1. We hereby certify to the Scottish Ministers in respect of the design of the following part of the Design or Design Element namely:

.....……..

(Name of Part of the Design or Design Element)

that reasonable professional skill and care has been taken by us with a view to securing that the part of the Design or Design Element:

(i) complies with the Scottish Ministers' Requirements.

(ii) has been accurately translated into the construction Drawings and other Design documents bearing the unique numbers listed below:

(iii) shall not be detrimental to the whole Design or Design Element.

(iv) where required a Safety Audit Certificate for Stage **[2] **[3] is attached

We agree that the words and phrases herein, unless otherwise stated, have the same meaning as attributed to them in the Contract between the Scottish Ministers and the Operating Company

Signed: ..... Firm: .....

DESIGNER (Team leader for Designer)

Name: ..... Date: .....

(Block Capitals)

Signed: ..... Firm: .....

(Operating Company)

Name: ..... Date: .....

(Block Capitals)

* *Insert Description of part of Design or Design Element*:

** *delete as appropriate*

Accommodation Works	(A)	Lighting and Electrical Works	(L)
Drainage	(D)	Road Pavements	(P)
Environmental and Landscaping	(E)	Road Layout	(RL)
Earthworks	(EW)	Signs and Road Markings	(SRM)
Fencing and Environmental Barriers	(F)	Piling	(X)
Kerbs, Footways and Paved Areas	(K)	Any other relevant parts of Design or Design Element	(Y)

MODEL OF CERTIFICATE TO BE USED BY THE OPERATING COMPANY

DESIGN CHECK CERTIFICATE: **CERTIFICATE NO: DCC(*).....**

OTHER PART OF DESIGN OR DESIGN ELEMENT

Order Reference .....

Scheme Identifier……..

1. We hereby certify to the Scottish Ministers' in respect of the check of the following part of the Design or Design Element namely:

.....…….....

(Name of Design Element)

that reasonable professional skill and care has been taken by us in carrying out the independent Design check of the part of the Design or Design Element with a view to securing that the part of the Design or Design Element:

(i) complies with the Scottish Ministers' Requirements.

(ii) has been accurately translated into the construction Drawings and other Design documents bearing the unique numbers listed below:

(iii) shall not be detrimental to the whole Design or Design Element.

We agree that the words and phrases herein, unless otherwise stated, have the same meaning as attributed to them in the Contract between the Scottish Ministers and the Operating Company

Signed: ..... Firm: .....

CHECKER (Team leader for Checker)

Name: ..... Date: .....

(Block Capitals)

Signed: ..... Firm: .....

(Operating Company)

Name: ..... Date: .....

(Block Capitals)

* Insert Description of part of Design or Design Element:

Accommodation Works	(A)	Lighting and Electrical Works	(L)
Drainage	(D)	Road Pavements	(P)
Environmental and Landscaping	(E)	Road Layout	(RL)
Earthworks	(EW)	Signs and Road Markings	(SRM)
Fencing and Environmental Barriers	(F)	Piling	(X)
Kerbs, Footways and Paved Areas	(K)	Any other relevant parts of Design or Design Element	(Y)

MODEL OF CERTIFICATE TO BE USED BY THE OPERATING COMPANY

COMBINED DESIGN AND DESIGN CHECK CERTIFICATE: CERTIFICATE NO: DC/DCC….

Scheme:…….. **Order Reference……**

Scheme Identifier……

1. We hereby certify to the Scottish Ministers in respect of the design and design check of the following part of the Design or Design Element namely:

- ❑ Accommodation Works (A)
- ❑ Road Restraint Systems (B)
- ❑ Drainage (D)
- ❑ Environmental and Landscaping (E)
- ❑ Earthworks (EW)
- ❑ Fencing and Environmental Barriers (F)
- ❑ Kerb, Footways and Paved Areas (K)
- ❑ Lighting and Electrical Works (L)
- ❑ Road Pavements (P)
- ❑ Road Layout (RL)
- ❑ Signs and Road Markings (SRM)
- ❑ Piling (X)
- ❑ Other (Y)

that reasonable professional skill and care has been taken by us with a view to securing that the part of the Design or Design Element:

(i) complies with the Scottish Ministers' Requirements.

(ii) has been accurately translated into the construction Drawings and other Design documents, where applicable, bearing the unique number contained in the Certificate number above.

(iii) is not detrimental to the whole Design or Design Element.

(iv) where applicable to earthworks (EW), has been the subject of an interpretative geotechnical report and that the conclusions of that report have been taken into account in the Design or Design Element.

(v) where applicable to road restraint systems (B), that all aspects of the Design or Design Element of the road restraint system on the Contract have been developed by the use of a risk assessment approach.

(vi) where required a Safety Audit Certificate for Stage *[2] *[3] is attached

** delete as appropriate*

We agree that the words and phrases herein, unless otherwise stated, have the same meaning as attributed to them in the Contract between the Scottish Ministers and the Operating Company.

Signed: ..... Firm: .....

DESIGNER (Team leader for Designer)

Name: ..... Date: .....

(Block Capitals)

Signed: ..... Firm: .....

CHECKER (Team leader for Checker)

Name: ..... Date: .....

(Block Capitals)

Signed: ..... Firm: .....

(Operating Company)

Name: ..... Date: .....

(Block Capitals)

To be inserted as Appendix to:

Design Certificate or the Combined Design and Design Check Certificate

MODEL OF CERTIFICATE TO BE USED BY THE OPERATING COMPANY

ROAD SAFETY AUDIT CERTIFICATE **CERTIFICATE NO: RSAC.....**

Scheme: …… **Order Reference .....**

Scheme Identifier……

Form of Certificate to be used by the Designer for certifying that a Road Safety Audit has been carried out in accordance with Schedule 1.

The Design for the Scheme has been the subject of a Road Safety Audit in accordance with Stage *[2] *[3] of the Design Manual for Roads and Bridges Standard HD 19 or equivalent and we certify that all recommendations agreed or recommended by the road safety auditors have been incorporated in the Design.

** delete as appropriate*

Signed: ..... Firm: .....

Lead Road Safety Auditor

Name: ..... Date: .....

(Block Capitals)

Signed: ..... Firm: .....

(Operating Company)

Name: ..... Date: .....

(Block Capitals)

MODEL OF CERTIFICATE TO BE USED BY THE OPERATING COMPANY

DESIGN CONSTRUCTION COMPLETION CERTIFICATE **CERTIFICATE No: DCComp…..**

(For Works Contracts and Operations executed by Operating Company)

(Issued upon completion of identified stage/element of the Operations/Works)

Order Reference ……..

Scheme Identifier …….

We hereby certify to the Scottish Ministers in respect of the construction of the following part of the Design or Design Element:

……

(Name of Design or Design Element)

that reasonable professional skill and care has been taken by us in supervising the construction and completion of the Design or Design Element with a view to securing that the part of the Design or Design Element:

(i) complies with the Scottish Ministers Requirements

(ii) has been constructed in accordance with the Design or Design Element.

We agree that the words and phrases herein, unless otherwise stated, have the same meaning as attributed to them in the Contract between the Scottish Ministers and the Operating Company.

Signed: ..... Firm: .....

(Operating Company)

Name: ..... Date: .....

(Block Capitals)

MODEL OF CERTIFICATE TO BE USED BY THE OPERATING COMPANY

CONSTRUCTION COMPLETION CERTIFICATE **CERTIFICATE No: CCompC …..**

(For Operations executed by Operating Company)

(Issued upon substantial completion of the Operations)

Order Reference ……..

Scheme Identifier …….

Scheme Name: ……..

For Operating Company Orders

We hereby certify to the Scottish Ministers we have completed our obligations in respect of the above referenced Scheme and have executed Operations as required by the Order referenced above.

We agree that the words and phrases herein, unless otherwise stated, have the same meaning as attributed to them in the Contract between the Scottish Ministers and the Operating Company.

Signed: ..... Firm: .....

(Operating Company)

Name: ..... Date: .....

(Block Capitals)

MODEL OF CERTIFICATE TO BE USED BY THE OPERATING COMPANY

CONSTRUCTION COMPLETION CERTIFICATE FOR SUPERVISION OF WORKS

CERTIFICATE No: CCSupW .....

(Issued on substantial completion of the Works)

Order Reference.....

Scheme Identifier…..……..

Scheme Title: ……

1. We agree that the words and phrases herein, unless otherwise stated, have the same meaning as attributed to them in the Contract between the Scottish Ministers and the Operating Company.
2. We hereby certify to the Scottish Ministers that we have supervised the construction and completion of the Works as defined in the Works Contract to which this Certificate relates and that we have exercised reasonable professional skill and care with a view to securing that such Works have been constructed in accordance with the requirements of the Design as set out in such Works Contract.

   In our opinion the Works Contractor completed the Works under the Works Contract to which this Certificate relates on

   <date> ……

   Signed: ..... Firm.....

   (On behalf of the Operating Company)

   Name: ..... Date: .....

MAINTENANCE CERTIFICATE

(For Operations executed by Operating Company)

(Issued upon completion maintenance period of the Operations)

CERTIFICATE No: MC …..

Order Reference ……..

Scheme Identifier …….

For Operations

We agree that the words and phrases herein, unless otherwise stated, have the same meaning as attributed to them in the Contract between the Scottish Ministers and the Operating Company.

In our opinion we have completed our obligations to construct, complete and maintain the Operations under the Order to which this Certificate relates

Signed: ..... Firm: .....

(Operating Company)

Name: ..... Date: .....

(Block Capitals)

MODEL OF CERTIFICATE TO BE USED BY THE OPERATING COMPANY

MAINTENANCE CERTIFICATE (SUPERVISION OF WORKS)

(Issued at end of maintenance period)

CERTIFICATE No: MCSupW…….

Order Reference.....

Scheme Identifier.……

Scheme Title: ……

1. We agree that the words and phrases herein, unless otherwise stated, have the same meaning as attributed to them in the Contract between the Scottish Ministers and the Operating Company.

   We hereby certify to the Scottish Ministers that we have supervised the Works as defined in the Works Contract during the period(s) of maintenance for such Works Contract to which this Certificate relates and that we have exercised reasonable professional skill and care with a view to securing that such Works have been completed in accordance with such Works Contract.

   In our opinion the Works Contractor completed his obligations to construct complete and maintain the Works under the Works Contract to which this Certificate relates on

   <date> ……

   Signed: ..... Firm.....

   (On behalf of the Operating Company)

   Name: ..... Date: .....

MODEL OF CERTIFICATE TO BE USED BY THE OPERATING COMPANY

DESIGN DEFECTS CORRECTION CERTIFICATE **CERTIFICATE No: DesDCC …….**

Order Reference ……..

Scheme Identifier ……

Scheme Title: …….

We hereby certify to the Scottish Ministers in respect of the Defects and Non-Conformances to the following part of the Design or Design Element:

…….

(Name of Design or Design Element)

that reasonable professional skill and care has been taken by us in supervising the correction of the Defects and Non-Conformances to that part of the Design or Design Element with a view to securing that the Defects and Non-Conformances have been corrected and that part of the Design or Design Element now complies with the Scottish Ministers' Requirements and has now been constructed in accordance with the Design or Design Element.

We agree that the words and phrases herein, unless otherwise stated, have the same meaning as attributed to them in the Contract between the Scottish Ministers and the Operating Company.

Signed: ..... Firm: .....

(Operating Company)

Name: ..... Date: .....

(Block Capitals)

MODEL OF CERTIFICATE TO BE USED BY THE OPERATING COMPANY

CONSULTATION CERTIFICATE **CERTIFICATE NO: ConsultC.....**

Order Reference…….

Scheme Identifier……

Scheme Title .....

Route .....

CONSULTATION WITH ..... (Name of Consultee)

1. We hereby certify to the Scottish Ministers in respect of:

.....……
(Name of part of Design or Design Element)

that we have consulted with .....(Name of Consultee) and have ascertained that they have no objections to the part of Design or Design Element as described on the construction Drawings listed in an attachment.

We agree that the words and phrases herein, unless otherwise stated, have the same meaning as attributed to them in this Contract between the Scottish Ministers and the Operating Company.

Signed: .....…….....

Firm .....
(On behalf of Operating Company)

Name: .....……..... Date: .....
(Block Capitals)

2. LIST OF CONSTRUCTION DOCUMENTS

……..

3. DECLARATION BY …….. (Name of Consultee)

On behalf of …… (Name of Consultee) I confirm that
(i) consultations referred to above have been completed as indicated above.

(ii) ……. (Name of Consultee) has no objections to the Design or Design Element as described on the Drawings and documents listed in part 2 of this Consultation Certificate, and
(iii) the Drawings and documents listed in part 2 of this Consultation Certificate meet all known requirements of the Consultee.

Signed ……

Name ……
(Block Capitals)
duly authorised to sign on behalf of ……. (Name of Consultee)

Date: …….

MODEL OF CERTIFICATE TO BE USED BY THE OPERATING COMPANY

VARIATION ORDER / CHANGE INSTRUCTION Form Number CON VO/CI…….

OPERATING COMPANY	Unit	.....
	Scheme ID	.....
	Scheme Name	.....
	Sheet No ……OF	
Operating Company Address	**VARIATION ORDER/CHANGE INSTRUCTION No:**	
	TO:	

You are instructed to carry out the following variations/changes in accordance with the Contract.

.....
.....
.....
.....
.....
.....
.....
.....
.....
.....
.....
.....
.....
.....

To include Site Instruction Reference (where appropriate) and Method of Payment

Signed: ..... Firm.....
(On behalf of the Operating Company)

Name: ..... Date: .....

MODEL OF CERTIFICATE TO BE USED BY THE OPERATING COMPANY

DEPARTURE FROM STANDARDS **CERTIFICATE No: DfS(S)…..**

(Bridges and other Highway Structures)

APPLICANT: ……

PROJECT TITLE: …….

DEPARTURE NO: …….

STRUCTURE REF: …….

SUBMISSION DATE: …….

1. List of Supporting Documentation

Standards:

Drawings:

Other:

2. Description of Proposed Departure

(include details of DMRB Standards and clause numbers which are being departed from)

Proposed Departure:

Clauses Being Departed From:

- Contract Version of Manual Contract for Highway Works
- Contract Version of Design Manual for Roads and Bridges
- Contract Employers' Requirements
- Other

3. Designer / Assessor justification

(include reasons why existing DMRB Standards are inappropriate)

4. Cost Implications:

(include an estimate of cost savings to the Scottish Executive as well as the effect on future maintenance costs)

5. Applicant Design Team Leader Declaration:

I declare that reasonable professional skill and care have been exercised in the preparation of this departure submission.

Signed: ..... Firm: .....

Name: .....

(Block Capitals with Engineering Qualifications)

Date: .....

6. Transport Scotland Bridges Branch - comments and recommendations:

.....

.....

.....

.....

.....

.....

.....

Signed: .....

Name: .....

(Block Capitals with Engineering Qualifications)

Date: .....

7. Transport Scotland Chief Bridge Engineer recommendation:

The above Departure is **approved / rejected** *(Delete as appropriate)*

Signed: .....

Name: .....
(Block Capitals with Engineering Qualifications)

Date: .....

MODEL OF CERTIFICATE TO BE USED BY THE OPERATING COMPANY

DEPARTURE FROM STANDARDS **CERTIFICATE No: DfS(R)…..**

(Roads & Highways)

APPLICANT: ……

PROJECT TITLE: ……

DEPARTURE NO: ……

SUBMISSION DATE: ……

PROJECT DETAILS	
General description of project	*[Realignment, new road, value added maintenance etc.]*
Route Strategy	*[Details of the Scottish Executive's current strategy with respect to the route affected by the proposed Departure from Standard. Applicants should seek guidance from the relevant Scottish Executive Project Manager where necessary]*
Road Category & Type	*[Refer to TD9]*
Proposed Carriageway Cross Section	*[Carriageway, lane, verge, central reserve, footpath widths etc.]*
Design Speed Proposed	*[Add Design Speed identified in accordance with TD9/93]*
Future Traffic Flows & Composition	*[Project Details for requirements]*

DESCRIPTION OF DEPARTURE	
Location and Chainage	*[eg. Junction of A8000/B8000, CH 1000 to CH 1050]*
Departure Type	*[eg. Stopping Sight Distance]*
DMRB Reference	*[Volume. Section. Part paragraph No.]*
Required Standard	*[Identify Desirable Minimum Standard]*
Standard Provided	*[Identify Standard being provided and how it relates to the Desirable Minimum Standard]*
Associated Departures or Relaxations	*[Identify any other Departures or Relaxations included within the proposed project that interact with the Departure being considered]*
Drawing Nos.	*[Add Drawing Reference Numbers. Refer to Table 2.3.1 for the minimum No./scale of Drawings to be provided]*

JUSTIFICATION	
Detailed Justification	*[Justification for requirements]*
Safety Implications	*[Safety Implications for requirements]*
Structural Integrity	*[Structural Integrity for requirements]*

ESSENTIAL COMPENSATORY MEASURES	
Compensatory Measures	*[Essential Compensatory Measures for requirements]*

signed for and on behalf of The Scottish Ministers

by ……...Roy Brannen……

on …..…… December 2014……

at ……Glasgow……...……

……..……
Authorised Signatory

signed for and on behalf of AMEY LG Limited

by
……...……

on ……..… December 2014……

at ……Glasgow……..….

……..…
Director/Company Secretary/
Authorised Signatory*

SCOTTISH MINISTERS' REQUIREMENTS

SCHEDULE 7 PART 1

MANAGEMENT, INSPECTION AND MAINTENANCE

CONTENTS **Page No.**

1.	**MANAGEMENT, INSPECTION AND MAINTENANCE**	**1**
1.1	Introduction	1
1.2	Routine Maintenance and Management Function of the Integrated Roads Information System	2
1.3	Inspections and Patrols	2
1.4	Safety Inspections	3
1.5	Safety Patrols	4
1.6	Night Time Safety Patrols	4
1.7	Ad hoc Inspections	4
1.8	Detailed Inspections	4
1.9	Maintenance	6
1.10	Management System Requirements	6
2.	**DEFECT CATEGORIES AND RESPONSE TIMES**	**7**
2.1	Classification of Category 1 and Category 2 Defects	7
2.2	Category 1 Defects Response Times	8
2.3	Repairs to Category 1 Defects	9
2.4	Category 2 Defects	9
3.	**HAZARD NOTICES AND OBSERVATIONS IDENTIFIED BY THE PERFORMANCE AUDIT GROUP**	**9**
3.1	General	9
3.2	Hazard Notices	10
3.3	Observations Resulting From Inspection	10
4.	**INSPECTION AND MAINTENANCE REQUIREMENTS**	**11**
4.1	Carriageway	11
4.2	Pedestrian and Cycle Facilities	11
4.3	Covers, Gratings and Frames	11
4.4	Kerbs, Channels, Edgings and Quadrants	12
4.5	Linear Drainage Systems	12
4.6	Gullies, Catchpits, Interceptors, Soakaways, Manholes and Oil Separators	13
4.7	Drainage Grips	14
4.8	Ditches	14
4.9	Filter Material	14
4.10	Drainage Structures	15
4.11	Balancing Ponds	15
4.12	Ancillary Drainage Items	15
4.13	Communications and Miscellaneous Equipment	16
4.14	Geotechnical Assets	18
4.15	Grassed Areas	19
4.16	Bulb and Wildflower Areas	22
4.17	Woodland Areas and Trees	22

4.18	Scrub Areas, Shrub Areas and Hedges	22
4.19	Wetland Areas	23
4.20	Special Ecological Measures	23
4.21	Invasive Species	23
4.22	Vehicle Restraint Systems	24
4.23	Pedestrian Restraint Systems	25
4.24	Fences, Walls, Screens and Noise Barriers	25
4.25	Road Markings	25
4.26	Road Studs	25
4.27	Road Traffic Signs	26
4.28	Traffic Signals	26
4.29	Roadside Electrical Assets and Power Supplies	30
4.30	Weather Stations	33
4.31	Arrester Beds	33
4.32	Snow Poles, Snow Gates, Snow Fences and Snow and Ice Hidden Message Signs	34
4.33	Traffic Control Barriers	34
4.34	Litter and Refuse	34
4.35	Dead Animals, Objects and Cleaning	35
4.36	Removal of Graffiti	36
4.37	Node Markers	36
4.38	Flooding	37

ANNEX 7.1/A – Additional Local Requirements **39**

ANNEX 7.1/B – Trunk Roads Requiring Safety Patrols **45**

ANNEX 7.1/C – Earthwork Monitoring Requirements **49**

ANNEX 7.1/D – Flooding Report Sample **53**

ANNEX 7.1/E – Procedures for Accessing, Maintaining, Inspecting and Testing of Shared Electrical Assets **57**

SCOTTISH MINISTERS' REQUIREMENTS

SCHEDULE 7 PART 1

MANAGEMENT, INSPECTION AND MAINTENANCE

1. MANAGEMENT, INSPECTION AND MAINTENANCE

1.1 Introduction

1.1.1 This Part details the management, inspection and maintenance requirements to be delivered by the Operating Company. These requirements also apply to highways related elements of Structures. Non highways related elements of Structures are addressed in Schedule 7 Part 6 and Schedule 7 Part 7.

1.1.2 These requirements do not cover major structural maintenance for the replacement or renewal of worn-out road pavements although the procedural requirements may assist in pavement management.

1.1.3 There may be instances where the Operating Company is required to carry out additional inspections, Safety Patrols and maintenance requirements to take account of local conditions. Details of such local requirements are provided in Annex 7.1/A of this Part.

1.1.4 At Commencement of Service Date 1 and at Commencement of Service Date 2 there will be items of Constructional Plant and equipment on the Unit that require maintenance. Such items will normally be related to safety and include temporary safety barriers, temporary supports to Structures, temporary electrical equipment and temporary traffic management equipment and related equipment to make safe Category 1 Defects. During Mobilisation Period 1, the Operating Company shall agree the requirements and availability of all such items of Constructional Plant and equipment after Commencement of Service Date 1 with the prior operating company and FETA. During Mobilisation Period 2, the Operating Company shall agree the requirements and availability of all such items of Constructional Plant and equipment after Commencement of Service Date 2 with the Director.

1.1.5 The management, inspection and maintenance requirements with regard to roadside electrical assets and power supplies are detailed in paragraph 4.29 of this Part.

1.1.6 In order to minimise the environmental impacts and disruption to road users arising from inspections and maintenance the Operating Company shall, wherever practicable, undertake multiple activities concurrently.

1.1.7 The Operating Company shall develop a system for managing the Operating Company's Audit Inspections and recording the results.

1.1.8 The Operating Company shall provide seven day's advance notification of the time, location and nature of an Operating Company's Audit Inspection to the Director and the Performance Audit Group such that the Director and the Performance Audit Group may be present.

1.1.9 The entire Unit shall be subject to Auditable Sections. The Operating Company shall:

(i) establish Auditable Sections,

(ii) prepare plans identifying the Auditable Sections, and

(iii) prepare a database of Auditable Sections.

The plans shall identify the boundaries of each Auditable Section and shall cross reference to the inventory of the Integrated Roads Information System except where inappropriate describing every grassed area asset contained within each Auditable Section. The longitudinal start and end points of each Auditable Section shall reference the Trunk Road network referencing system where appropriate. No later than 14 days prior to:

(i) Commencement of Service Date1 for Network 1, and

(ii) Commencement of Service Date 2 for Network 2,

the Operating Company shall submit the plans and database to the Director for consent.

1.1.10 Where the results of an Operating Company's Audit Inspection of an Auditable Section indicate that the requirements of this Part have not been achieved, such Auditable Section shall be subject to a further Operating Company's Audit Inspection 28 days after the original Inspection. Such further Operating Company's Audit Inspection shall be in addition to the programme of random Operating Company's Audit Inspections.

1.2 Routine Maintenance and Management Function of the Integrated Roads Information System

1.2.1 The requirements for the use of the routine maintenance and management function of the Director's Integrated Roads Information System are detailed in Schedule 4 Part 2.

1.2.2 The Operating Company shall use the routine maintenance and management function of the Integrated Roads Information System provided during Mobilisation Period 1 to implement, monitor and record all inspections, patrols, Category 1 and Category 2 Defects, maintenance Operations required by this Part and maintenance Operations undertaken during Service Delivery Period 1 and Service Delivery Period 2.

1.2.3 A Data Capture Device shall be used, where suitable, for recording maintenance work, remedial work, electrical testing, electricity meter reading and all similar tasks including data capture during inspections and patrols and to record all Defects identified. Inspection and patrol data shall be uploaded to and downloaded from the routine maintenance and management function of the Integrated Roads Information System.

1.2.4 The routine maintenance and management function of the Integrated Roads Information System shall include the dates of the last inspections, maintenance Operations required by this Part and maintenance operations undertaken by the previous operating company.

1.2.5 Where the dates of the last inspections or maintenance Operations required by this Part are not available for Network 1 during Mobilisation Period 1, the inspections and maintenance shall be deemed to be due immediately.

1.3 Inspections and Patrols

1.3.1 The Operating Company shall carry out Safety Inspections, Safety Patrols, night time Safety Patrols, ad-hoc inspections and Detailed Inspections and record these in the

routine maintenance and management function of the Integrated Roads Information System. This work shall be planned and executed to:

(i) identify Category 1 Defects and Category 2 Defects,

(ii) identify and note any new accessibility barriers that are not recorded in the routine maintenance and management function of the Integrated Roads Information System. The Operating Company shall add such barriers to the routine maintenance and management function of the Integrated Roads Information System within 24 hours of completion of the inspection or patrol during which they were noted, and

(iii) record any missing assets, incorrectly located, described or identified assets or their attributes.

1.3.2 During inspections and patrols, the Operating Company shall collect, collate and make available to the Director if requested, information relating to wildlife road-kill incidents involving the following:

(i) otter, badger, deer (red, roe and fallow), red squirrel and raptor species.

1.3.3 The Operating Company shall undertake additional inspections and patrols and any other necessary actions relating to Severe Weather identified from using its expert weather forecasting service events in accordance with the requirements of Schedule 7 Part 8.

1.3.4 Annex 7.1/A of this Part lists additional local requirements which shall be accommodated within inspections.

1.3.5 Annex 7.1/B of this Part specifies the Trunk Roads on which Safety Patrols shall be undertaken.

1.3.6 All vehicles involved in inspection and maintenance shall be fitted with a global positioning tracking system. The Operating Company shall supply the Director and the Performance Audit Group with remote access to map based software showing locations, dates and times and movements of vehicles.

1.3.7 For roadside electrical assets, road lighting and power supplies, collection of information shall include the exact location and as installed unique identification of any faulty asset as identified from site.

1.4 Safety Inspections

1.4.1 Safety Inspections shall be carried out at frequencies not exceeding seven days on all parts of all Trunk Roads in the Unit. Safety Inspections shall be designed primarily to identify Category 1 Defects. Where possible, Safety Inspections shall be carried out during off-peak traffic periods in order to minimise traffic disruption.

1.4.2 In each Annual Period, at least two Safety Inspections shall be carried out either during, or immediately following, a period of wet weather to identify areas prone to flooding. There shall be a minimum period of three months between wet weather Safety Inspections.

1.4.3 Safety Inspections shall inspect all that can be seen from a slow moving vehicle within the boundary of the Trunk Roads within the Unit. The Operating Company shall include documented procedures in the Management System for determining the appropriate inspection speeds for Safety Inspections.

1.4.4 Safety Inspections shall be recorded against the network referencing and include the date and time each link and section was completed. All Safety Inspection data, including inspection route and Defect data, shall be uploaded into the routine maintenance and management function of the Integrated Roads Information System within 24 hours of the Safety Inspection commencing.

1.5 Safety Patrols

1.5.1 Safety Patrols shall be carried out on the Trunk Roads within the Unit described in Annex 7.1/B of this Part. Safety Patrols shall be carried out such that a Safety Inspection or Safety Patrol shall be carried out at intervals not exceeding four days.

1.5.2 Safety Patrols shall be designed primarily to identify Category 1 Defects. Where possible, Safety Patrols shall be carried out during off-peak traffic periods in order to minimise traffic disruption. The Operating Company shall include documented procedures in the Management System for determining the appropriate inspection speeds for Safety Patrols.

1.5.3 Safety Patrols shall be recorded against the network referencing and include the date and time each link and section was completed. All Safety Patrol data, including inspection route and Defect data, shall be uploaded into the routine maintenance and management function of the Integrated Roads Information System within 24 hours of the Safety Patrol commencing.

1.6 Night Time Safety Patrols

1.6.1 Night time Safety Patrols of all illuminated roadside electrical assets including road lighting shall be carried out in accordance with the requirements of the *Design Manual for Roads and Bridges* except that they shall be carried out at intervals not exceeding 14 days from 1 October to 31 March and at intervals not exceeding 28 days from 1 April to 30 September.

1.7 Ad hoc Inspections

1.7.1 Ad hoc inspections shall be carried out as necessary in response to reports of Defects or Incidents on the Trunk Road network from Operating Company staff or any third party. The Operating Company may use the Trunk Road Incident Support Service, Incident Response Resources or other Operating Company resources to carry out ad hoc inspections and investigate reported Defects or Incidents.

1.7.2 All confirmed Category 1 and Category 2 Defects identified by ad hoc inspections shall be uploaded into the routine maintenance and management function of the Integrated Roads Information System within 24 hours of identification.

1.8 Detailed Inspections

1.8.1 Detailed Inspections shall be deemed to include as a minimum all activities identified in paragraph 1.8 of this Part.

1.8.2 Detailed Inspections shall generally be walking inspections which involve comprehensive scrutiny of the assets.

1.8.3 Detailed Inspections shall normally be carried out from the footway, hardshoulder or grass verge as appropriate. Where inventory items are within or adjacent to a central reserve on a motorway or dual carriageway, a separate Detailed Inspection of such items shall be undertaken.

1.8.4 Detailed Inspections shall identify Defects as described in the *Transport Scotland Trunk Road Inspection Manual*.

1.8.5 Detailed Inspections shall further identify the condition of ancillary assets as described in the *Trunk Road Condition Manual*.

1.8.6 Defects shall be recorded in accordance with the provisions of *the Transport Scotland Trunk Road Inspection Manual.* Where required by the *Transport Scotland Trunk Road Inspection Manual,* associated data shall also be recorded in the routine maintenance and management function of the Integrated Roads Information System.

1.8.7 The condition of ancillary assets shall be recorded in accordance with the provisions of the *Trunk Road Condition Manual*. Where required by the *Trunk Road Condition Manual*, associated data shall also be recorded in the routine maintenance and management function of the Integrated Roads Information System.

1.8.8 All Detailed Inspection Defect data and ancillary asset condition data shall be uploaded into the routine maintenance and management function of the Integrated Roads Information System within four days of the data being gathered.

1.8.9 Unless otherwise stated, the Operating Company shall carry out Detailed Inspections at the frequencies stated in this Part.

1.8.10 The Operating Company shall arrange Detailed Inspections to minimise disruption to traffic, other road users and the public, while ensuring adequate access is available to allow proper inspection and provide a safe working environment for the inspection personnel involved.

1.8.11 Whenever practicable, Detailed Inspections which necessitate Lane Occupation shall be carried out in conjunction with other Operations. Where separate Lane Occupations are necessary, Detailed Inspections shall be undertaken in off-peak traffic conditions.

1.8.12 The Operating Company shall plan its schedule of Detailed Inspections requiring a Lane Occupation to ensure that as far as is practical, all Detailed Inspections are carried out and completed during that Lane Occupation.

1.8.13 The Operating Company shall validate the accuracy of all data within the inventory during Detailed Inspections. Any errors shall be recorded as a Defect and corrected within four days. Such errors shall also be processed and corrected in accordance with the documented procedures in the Management System.

1.8.14 Within 12 months of Commencement of Service Date 1, or such shorter period as may be stated elsewhere in the Contract, the Operating Company shall populate the routine maintenance and management function of the Integrated Roads Information System with all of the attributes listed in the *Trunk Road Inventory Manual* for all assets listed therein, which are present within Network 1.

1.8.15 Within 12 months of Commencement of Service Date 2, or such shorter period as may be stated elsewhere in the Contract, the Operating Company shall populate the routine maintenance and management function of the Integrated Roads Information System with all of the attributes listed in the *Trunk Road Inventory Manual* for all assets listed therein, which are present within Network 2.

1.9 Maintenance

1.9.1 The Operating Company shall carry out maintenance in accordance with the intervals referred to in this Part and the routine maintenance and management function of the Integrated Roads Information System.

1.9.2 The Operating Company may review the intervals recorded in the routine maintenance and management function of the Integrated Roads Information System and propose changes to the intervals for required maintenance of individual inventory items or groups of items to the Director for his consent to ensure that continued asset operation and condition are maintained.

1.9.3 The intervals recorded in the routine maintenance and management function of the Integrated Roads Information System shall not exceed those referred to in this Part.

1.9.4 Unless stated otherwise within this Part, all maintenance data shall be recorded against inventory items. Where required by this Part and the *Trunk Roads Condition Manual*, other data associated with maintenance shall also be recorded in the routine maintenance and management function of the Integrated Roads Information System such as condition ratings, checklists, reports, photographs and Certificates.

1.9.5 All Category 1 Defects and Category 2 Defects identified during Operations shall be uploaded into the routine maintenance and management function of the Integrated Roads Information System within 24 hours of identification. All other maintenance data and data associated with maintenance shall be uploaded into the routine maintenance and management function of the Integrated Roads Information System within four days of the activity being completed on each inventory item.

1.10 Management System Requirements

1.10.1 In addition to specific requirements stated elsewhere in this Contract, the Management System shall contain documented processes and procedures for:

(i) the use of the routine maintenance and management function of the Integrated Roads Information System supplied,

(ii) Operations carried out by inspection and patrol teams to make Category 1 Defects safe at the time of inspection,

(iii) storage and retrieval of all Records using either the routine maintenance and management function of the Integrated Roads Information System or other storage facilities available remotely to the Director and the Performance Audit Group,

(iv) checklists used for all types of inspections and maintenance,

(v) method statements to be developed and used for all types of roadside electrical apparatus in accordance with guidelines within Transport Scotland guidance document *LDS8023– Electrical Maintenance Guidelines* and requirements in the Specification,

(vi) Records to be maintained to support the robustness of all types of inspections and maintenance,

(vii) how staff and employees report any Category 1 Defects which they observe when travelling within the Unit,

(viii) how it monitors, receives, distributes, replies to and addresses all Hazard Notices and Observations Resulting from Inspection,

(ix) the validation of all data for correctness and completeness before it is incorporated into the routine maintenance and management function of the Integrated Roads Information System, and

(x) planning, executing, monitoring and managing its Operations and the demonstration of the accuracy and rigorousness of its inspections and maintenance regime.

1.10.2 The procedures for Safety Inspections and Safety Patrols shall include:

(i) how the Operating Company carries out its Safety Inspection and Safety Patrol duties,

(ii) the vehicles to be utilised and the equipment to be carried by them, and

(iii) details covering inspection and Safety Patrol routes such as programmes, resources, estimated inspection speeds and average durations.

1.10.3 The procedures for Detailed Inspections shall include:

(i) how the Operating Company carries out its Detailed Inspection duties,

(ii) the equipment to be used by Detailed Inspection teams,

(iii) programmes,

(iv) resources, and

(v) method statements.

1.10.4 The procedures for maintenance shall include how the Operating Company carries out its maintenance and how the required timescales will be achieved.

1.10.5 The procedures for managing Category 2 Defects shall include how the Operating Company groups Category 2 Defects together, prioritises the repairs and prepares and submits programmes and Bids for the repairs to the Director.

2. DEFECT CATEGORIES AND RESPONSE TIMES

2.1 Classification of Category 1 and Category 2 Defects

2.1.1 When classifying Category 1 and Category 2 Defects, the Operating Company shall give consideration to the potential impact on all road users including motorists, pedestrians, cyclists, motorcyclists, equestrians and disabled users.

2.1.2 The Operating Company shall comply with the provisions of the *Transport Scotland Trunk Road Inspection Manual* regarding classification of Defects.

2.1.3 The *Transport Scotland Trunk Road Inspection Manual* is deemed not to contain an exhaustive compendium of Defects. In the absence of a description of a Defect in the *Transport Scotland Trunk Road Inspection Manual,* the Operating Company shall make the classification from first principles.

2.1.4 Defect repair dates for all Category 1 and Category 2 Defects completed by the Operating Company or any third party shall be entered into the routine maintenance

and management function of the Integrated Roads Information System by the Operating Company within four days of completion.

2.2 Category 1 Defects Response Times

2.2.1 Unless stated otherwise in this Part, Category 1 Defects shall be dealt with by the Operating Company in priority order as stated in paragraph 2.2 of this Part.

2.2.2 The Operating Company's inspection team, Trunk Road Incident Support Service or initial Incident Response Resources shall make the Category 1 Defect safe when identified. This shall be through executing immediate repairs, removing the hazard or by taking any other measures necessary to protect the public and other users of the Unit.

2.2.3 Where a Category 1 Defect renders a Trunk Road unsafe for road users, the Operating Company shall, under police instruction or subject to an Order, close the relevant part of the Trunk Road for as short a period as possible while remedial action is undertaken.

2.2.4 Where a Category 1 Defect cannot be repaired immediately or the hazard cannot be removed, the Operating Company shall take action to make the area safe until the required temporary or permanent repairs have been completed.

2.2.5 The temporary or permanent repairs shall be undertaken as soon as possible and no later than:

(i) 06:00 on the day following identification for Category 1 Defects on carriageways, and

(ii) within 24 hours of identification for all other Category 1 Defects.

2.2.6 Where a temporary repair has been carried out, the deferred permanent repair period for the following Defect types shall be:

(i) 28 days for carriageway surface, and

(ii) 56 days for bridge parapets.

2.2.7 All other Category 1 Defects shall be repaired permanently within the specific period referred to in this Part, or no later than 28 days after identification where no specific period is stated.

2.2.8 Where Category 1 Defects have been made safe by means of temporary signing or repair, the Operating Company shall make arrangements to ensure that the continued integrity of the signing or repair is maintained until a permanent repair can be made.

2.2.9 For Category 1 Defects associated with missing warning or mandatory traffic signs, temporary repairs must include for the provision of adequate substitute signing.

2.2.10 Within 24 hours of identification, the Operating Company shall attach a photograph of each Category 1 Defect to the corresponding routine maintenance and management function of the Integrated Roads Information System record. A photograph of each temporary and permanent repair shall also be attached to the routine maintenance and management function of the Integrated Roads Information System record within four days of completion of each repair.

2.3 Repairs to Category 1 Defects

2.3.1 Subject to the provisions of paragraph 2.3.3 of this Part, the Operating Company shall undertake all repair of any Category 1 Defects on the Unit between Commencement of Service Date 1 and Service End Date whensoever or howsoever arising. This includes as a minimum, any Category 1 Defects not repaired and or made safe by the previous operating or FETA.

2.3.2 Repair of a Category 1 Defect where the value of repair is more than £10,000 shall be deemed to be subject to an Order. The Director shall issue an Order to facilitate payment in accordance with Schedule 4 Part 1. Such an Order may be retrospective.

2.3.3 Where the estimated value of the permanent repair of a Category 1 Defect is in excess of the threshold value referred to in Clause 7.2.3 of Schedule 1 Part 3 the Operating Company shall carry out all work necessary to mitigate an immediate or imminent hazard, shall inform the Director and shall not proceed with the permanent repair unless instructed by the Director.

2.3.4 Notwithstanding any temporary repair, hazard mitigation measures or interim measures that may be taken by the Operating Company or others in respect of a Category 1 Defect, such Category 1 Defect shall be deemed to exist until permanently remedied.

2.4 Category 2 Defects

2.4.1 The Operating Company shall log, group together and prioritise the repair of all Category 2 Defects. The Operating Company shall prepare and submit programmes and Bids for these repairs to the Director.

2.4.2 Category 2 Defects may also be used by the Director to inform asset management decisions, budget allocations and justify future spending requirements.

3. HAZARD NOTICES AND OBSERVATIONS IDENTIFIED BY THE PERFORMANCE AUDIT GROUP

3.1 General

3.1.1 The Performance Audit Group may observe situations within the Unit that present an immediate hazard. In such circumstances, the Performance Audit Group is authorised to issue a Hazard Notice immediately to the Operating Company, which shall be copied to the Director.

3.1.2 The Performance Audit Group may also identify other circumstances where its observations require an action by the Operating Company. In such circumstances, the Performance Audit Group is authorised to issue an Observation Resulting from Inspection immediately to the Operating Company, which shall be copied to the Director.

3.1.3 Hazard Notices and Observations Resulting from Inspection are not instructions from the Performance Audit Group or the Director to the Operating Company. They are a method of formally identifying issues on the Trunk Road network and requesting responses from the Operating Company. Hazard Notices and Observations Resulting from Inspection are intended to improve and speed up the flow of information from the Performance Audit Group to the Operating Company and the Director and ensure this is provided as quickly as possible.

3.1.4 The Operating Company shall address and respond to any Hazard Notice or Observation Resulting from Inspection without delay in accordance with the other provisions of this Contract.

3.1.5 Hazard Notices and Observations Resulting from Inspections may refer to any topic relating to the management and operation of the Unit and Trunk Road network.

3.1.6 The Operating Company shall supply one e-mail address to the Performance Audit Group to which all Hazard Notices and Observations Resulting from Inspection shall be addressed.

3.1.7 The Operating Company shall maintain a register of all Hazard Notices and Observations Resulting from Inspection issued and responded to, actions due and actions completed, any Defect repair required and provide the Director with monthly reports.

3.2 Hazard Notices

3.2.1 If the hazardous situation is related to traffic management and the Operating Company is responsible for the Operations, an oral report may be given by the Performance Audit Group to personnel on Site and to the Operating Company at the Central Office.

If the hazardous situation is related to traffic management and the Operating Company is not directly responsible for the work, an oral report may be made by the Performance Audit Group to the Operating Company at the Central Office.

In all other cases which do not involve traffic management, an oral report may be made by the Performance Audit Group to the Central Office.

3.2.2 A Hazard Notice giving written confirmation of the hazard will be issued by the Performance Audit Group. This will be sent by e-mail to the Operating Company and copied to the Director.

3.2.3 The Operating Company shall reply to the Performance Audit Group by telephone call, confirmed via e-mail, within 24 hours of an oral report being issued. The reply shall give details of the actions taken by the Operating Company to deal with the hazard. The Operating Company shall copy its reply to the Director.

3.3 Observations Resulting From Inspection

3.3.1 Observations Resulting from Inspection may be issued when:

(i) non-compliant maintenance, non-compliant workmanship or any other contractual non-compliance issues are observed,

(ii) Category 1 Defects or Category 2 Defects of concern are identified, or

(iii) other events of concern are observed which may include unexpected road closures, unusual traffic congestion or other occurrence that may affect the maintenance and management of the Trunk Road network.

3.3.2 When the Operating Company has received an Observation Resulting from Inspection, it shall reply directly to the Performance Audit Group by e-mail, copied to the Director, within the timescale referred to in the Observation Resulting from Inspection. The reply shall either give details of the Operating Company's proposals to rectify the issue or state that the issue shall be dealt with at a future date as part of the maintenance programme, as appropriate.

3.3.3 The time for reply by the Operating Company shall generally be five Working Days although this may vary depending on the nature of the Observation Resulting from Inspection.

4. INSPECTION AND MAINTENANCE REQUIREMENTS

4.1 Carriageway

4.1.1 Carriageways include the surface of carriageways, hardshoulders, dedicated bus lanes, crossovers, car parks, lay-bys, central islands and central reserves and also include hardstrips and hardshoulders provided on some carriageways outwith the edge marking. Carriageway inspection and maintenance requirements do not include the replacement or renewal of those parts of the Trunk Road that have become unserviceable and that require structural pavement maintenance Operations.

4.1.2 Detailed Inspections of carriageways shall be carried out at intervals not exceeding 12 months.

4.1.3 Detailed Inspections of carriageways within or adjacent to a central reserve on motorways and dual carriageways shall be carried out from the offside Lane using a Lane closure, at intervals not exceeding 24 months.

4.1.4 Maintenance of carriageways shall include weed control in accordance with clause 3002 of the Specification.

4.2 Pedestrian and Cycle Facilities

4.2.1 Pedestrian facilities include paved areas for pedestrians, usually within the Trunk Road boundary. Cycle facilities include paved areas for cycling with or without a pedestrian facility.

4.2.2 Schedule 7 Part 2 defines categories for pedestrian and cycle facilities as Category A, B or C. The Operating Company shall ensure that the category attribute for footway and cycleway inventory in the routine maintenance and management function of the Integrated Roads Information System matches these defined categories at all times.

4.2.3 Detailed Inspections of pedestrian and cycle facilities shall be carried out at the following frequencies:

(i) Category A areas at intervals not exceeding one month,

(ii) Category B areas at intervals not exceeding three months, and

(iii) all other areas at intervals not exceeding 12 months.

4.2.4 Maintenance of pedestrian and cycle facilities shall include weed control in accordance with clause 3002 of the Specification.

4.3 Covers, Gratings and Frames

4.3.1 Covers, gratings and frames include all covers, gratings and frames within the Trunk Road network, including those that fall under the responsibility of Undertakers and other parties. The *New Roads and Street Works Act 1991* requires an Undertaker to maintain its apparatus in the street to the reasonable satisfaction of the roads authority. Covers, grating or frames associated with the motorway communications duct and chamber network are the property of the Scottish Ministers and the responsibility to maintain this apparatus falls to the Operating Company.

4.3.2 Where an inspection by the Operating Company identifies a cover, grating or frame with a Category 1 Defect, it shall be made safe by the Operating Company in accordance with the requirements of this Part.

4.3.3 Where the cover, grating or frame is the property of an Undertaker or third party, the Operating Company shall immediately give notice to the Undertaker or third party to carry out permanent repairs within the time period provided in this Part for the repair of Category 1 Defects. Covers, grating or frames associated with the motorway communications duct and chamber network are the property of the Scottish Ministers and the Operating Company shall carry out permanent repairs within the time period provided in this Part for the repair of Category 1 Defects.

4.3.4 Records of Category 1 Defects in Undertakers' covers, gratings and frames and the actions taken by the Operating Company shall be entered into the routine maintenance and management function of the Integrated Roads Information System. The Category 1 Defects shall remain recorded as not repaired until the Operating Company has identified that a permanent repair has been completed. The performance of the Undertakers shall be monitored by the Operating Company using the routine maintenance and management function of the Integrated Roads Information System and reported to the Director within 25 Working Days of the end of each Annual Period.

4.3.5 Detailed Inspections of covers, gratings and frames shall be carried out at intervals not exceeding 12 months.

4.3.6 Detailed Inspections of covers, gratings and frames within or adjacent to a central reserve shall be carried out from the offside lane using a lane closure, at intervals not exceeding 24 months.

4.3.7 Maintenance of covers, gratings and frames shall include weed control in accordance with clause 3002 of the Specification.

4.4 Kerbs, Channels, Edgings and Quadrants

4.4.1 Kerbs, channels, edgings and quadrants include all types of kerbs, channels, edgings and quadrants and areas between edgings and quadrants.

4.4.2 Detailed Inspections of kerbs, channels, edgings and quadrants shall be carried out by the Operating Company at intervals not exceeding 12 months.

4.4.3 Detailed Inspections of kerbs, channels, edgings and quadrants within or adjacent to a central reserve shall be carried out from the offside lane using a lane closure, at intervals not exceeding 24 months.

4.4.4 Maintenance of kerbs, channels, edgings and quadrants shall include weed control in accordance with clause 3002 of the Specification.

4.5 Linear Drainage Systems

4.5.1 Linear drainage systems include piped drains, slot drains, kerb block drains, combined drainage and kerb systems, feeder pipes, linear drainage channel systems, kerb or channel offlet pipes, channels through chambers and piped grips.

4.5.2 The Operating Company shall use information from gully, catchpit and interceptor emptying and cleansing Operations as well as inspection procedures to verify that

linear drainage systems are operating in compliance with the requirements of this Contract.

4.5.3 The Operating Company shall determine the ownership of linear drainage systems outwith the Unit before any work is carried out.

Detailed Inspections of linear drainage shall be carried out at intervals not exceeding 12 months. All surface features and each end of each section of each length of the linear drainage system shall be inspected to determine general structural condition and any signs of silting or blockage.

4.5.4 Linear drainage systems excluding slot drains and kerb block drains shall be maintained in accordance with the clause 6104AR of the Specification when necessary.

4.5.5 Slot drains and kerb block drains are often located at known sensitive drainage points and therefore require more regular attention by the Operating Company. The Operating Company shall reduce the time between maintenance intervals recorded in the routine maintenance and management function of the Integrated Roads Information System for inventory items that require more frequent maintenance to prevent significant reductions in capacity occurring.

4.5.6 Slot drains and kerb block drains shall be maintained in accordance with clause 6104AR of the Specification.

Slot drains and kerb block drains shall be maintained as necessary and at intervals not exceeding those stated for each inventory item in the routine maintenance and management function of the Integrated Roads Information System. The maintenance interval shall not exceed 12 months.

4.6 Gullies, Catchpits, Interceptors, Soakaways, Manholes and Oil Separators

4.6.1 Gullies, catchpits, interceptors, soakaways, manholes and oil separators include all types of gullies, catchpits, interceptors, soakaways, manholes and oil separators.

4.6.2 Detailed Inspections of gullies, catchpits, soakaways and manholes shall be carried out at intervals not exceeding 12 months.

Detailed Inspections of interceptors and oil separators forming shall be carried out at intervals not exceeding 12 months.

4.6.3 Detailed Inspections of gullies, catchpits, soakaways and manholes within or adjacent to a central reserve shall be carried out from the offside lane using a Lane Closure, at intervals not exceeding 24 months.

Detailed Inspections of interceptors and oil separators within or adjacent to a central reserve on motorways and dual carriageways shall be carried out from the offside lane using a Lane Closure, at intervals not exceeding 24 months.

4.6.4 Gullies, catchpits, soakaways, manholes, interceptors and oil separators shall be cleaned, marked and recorded in accordance with clause 6102AR of the Specification at intervals not exceeding those stated for each inventory item in the routine maintenance and management function of the Integrated Roads Information System.

4.6.5 Gullies, catchpits, interceptors, soakaways, manholes and oil separators are often located at known sensitive drainage points and therefore require more regular attention by the Operating Company. The Operating Company shall adjust the

maintenance intervals recorded in the routine maintenance and management function of the Integrated Roads Information System for inventory items that require more frequent maintenance to prevent significant reductions in capacity. The maintenance interval shall not exceed 12 months.

4.7 Drainage Grips

4.7.1 Drainage grips are open channels cut across verges which lead to ditches or linear drainage systems.

4.7.2 Detailed Inspections of drainage grips shall be carried out at intervals not exceeding 12 months.

4.7.3 Detailed Inspections of drainage grips within or adjacent to a central reserve shall be carried out from the offside lane using a lane closure, at intervals not exceeding 24 months.

4.7.4 Drainage grips shall be maintained in accordance with clause 6103AR of the Specification as necessary and at intervals not exceeding those stated for each inventory item in the routine maintenance and management function of the Integrated Roads Information System. The maintenance interval shall not exceed 12 months.

4.7.5 Drainage grips are often located at known sensitive drainage points and therefore require more regular attention by the Operating Company. The Operating Company shall adjust the maintenance intervals recorded in the routine maintenance and management function of the Integrated Roads Information System for inventory items that require more frequent maintenance to prevent significant reductions in capacity.

4.8 Ditches

4.8.1 Detailed Inspections of ditches shall be carried out at intervals not exceeding 12 months.

4.8.2 Maintenance of ditches shall include weed control in accordance with clause 3002 of the Specification.

4.9 Filter Material

4.9.1 Filter material includes filter material associated with filter drains, counterfort drains, drains and soakaways which may incorporate a properly formed invert or collection pipe. Filter material does not include pipes associated with filter drains or chambers associated with soakaways.

4.9.2 Detailed Inspections of filter material forming shall be carried out at intervals not exceeding 12 months.

4.9.3 Detailed Inspections of filter material within or adjacent to central reserves shall be carried out from the offside lane using a Lane Closure, at intervals not exceeding 24 months.

Filter drains shall be maintained in accordance with clause 6105AR of the Specification at the following minimum frequencies:

(i) at intervals not exceeding three years in verges and central reserves, and

(ii) at intervals not exceeding five years in all other areas.

4.9.4 Maintenance of filter material shall include weed control in accordance with clause 3002 of the Specification.

4.10 Drainage Structures

4.10.1 Drainage structures include culverts, enclosed channels and large pipes. Drainage structures do not include Structures and linear drainage systems. During inspections, attention should be given to fittings across the ends of some culverts as these are particularly prone to blockage, restricting the free flow of water through the culvert.

4.10.2 Detailed Inspections of every drainage structure shall be carried out twice yearly during February or March and September or October.

4.10.3 Drainage structures shall be maintained in accordance with clause 6106AR of the Specification as necessary to maintain capacity and the free flow of water.

4.11 Balancing Ponds

4.11.1 Balancing ponds include all balancing ponds that are provided for flood control and anti-Pollution purposes and are sometimes situated some distance from Trunk Roads. Balancing ponds exclude any associated feeder pipes or ditches.

4.11.2 The Operating Company shall pay particular attention during inspections to the following issues:

(i) silting in the pond causing a loss of storage capacity,

(ii) damage or erosion to the pond banks, walls, liners or bunds,

(iii) damage or obstruction to the pond outlet which affects or may affect the controlled rate of discharge, and

(iv) safety aspects, including the maintenance of fences to prevent public access.

4.11.3 Balancing ponds can become important sites for nature conservation. Prior to any maintenance of a balancing pond, the Operating Company shall consult the Director to ascertain whether specialist environmental advice is required.

4.11.4 Detailed Inspections of balancing ponds shall be carried out at intervals not exceeding six months.

4.11.5 Maintenance of balancing ponds shall include weed control in accordance with clause 3002 of the Specification.

4.12 Ancillary Drainage Items

4.12.1 Ancillary drainage items include headwalls, aprons, spillways, trash screens, watergates, grilles, sluices, tidal flaps, penstocks, valves, pumps and other specialist equipment.

4.12.2 Detailed Inspections of headwalls, aprons and spillways shall be carried out at intervals not exceeding one year.

4.12.3 Detailed Inspections of trash screens, watergates and grilles shall be carried out annually during February or March and September or October.

4.12.4 Detailed Inspection of sluices, tidal flaps, penstocks, valves, pumps and other specialised equipment shall be carried out at intervals not exceeding six months or in accordance with the intervals stated in the manufacturers' recommendations or instructions where these are more frequent.

4.12.5 Detailed Inspections of all electrical ancillary drainage items shall be carried out in accordance with paragraph 4.29 of this Part.

4.12.6 Ancillary drainage items shall be maintained in accordance with clause 6107AR of the Specification as necessary.

4.13 Communications and Miscellaneous Equipment

4.13.1 Communications and miscellaneous equipment includes emergency telephones, hazard warning signals, matrix signals, variable message signs, equipment cabinets, closed circuit television cameras (except for those relating to "Weather Stations" which are dealt with in paragraph 4.30 of this Part), ramp metering sites and sub-surface and overhead traffic detection equipment. Maintenance of the specialist technology elements of these items is undertaken by authorised specialist contractors under separate contracts managed directly by the Director excluding the equipment listed in Annex 3.7/H of Schedule 3 Part 7 which shall be the Operating Company's responsibility. The Operating Company's responsibilities for the elements at sites where communications and miscellaneous equipment is located are detailed in paragraph 4.13 of this Part.

4.13.2 The Operating Company shall be responsible for the repair and maintenance of the soft and hard landscaping at sites where communications and miscellaneous equipment is located. This activity shall ensure that any infrastructure intended to provide access to the communications and miscellaneous equipment provides a safe and unhindered method of working for the specialist maintenance contractor. This activity shall include:

(i) grass cutting and clearing of a swathe one metre wide around all communications and miscellaneous equipment and access paths and maintaining this clear swathe throughout the growing season,

(ii) removal of any undergrowth immediately adjacent to communications and miscellaneous equipment,

(iii) clearing of all paths and slabbed areas of weeds and grass cuttings,

(iv) repair and maintenance of broken or otherwise damaged or uneven paving slabs,

(v) repair and maintenance of broken or otherwise damaged or uneven access steps, stairs, handrails, gates, ladders and the like,

(vi) removal of litter, refuse and debris from around the communications and miscellaneous equipment site,

(vii) maintenance of clear access to vehicle hard standing areas, and

(viii) removal of graffiti in accordance with paragraph 4.36 of this Part.

4.13.3 Where access is required by any of the parties to an electrical equipment cabinet that provides electrical energy to both an Operating Company maintained device and communications and miscellaneous equipment maintained by others, it shall be undertaken in accordance with the access procedure set out in Annex 7.1/E of this Part. The maintenance, inspection and testing regime for such electrical equipment cabinets is set out in Annex 7.1/E of this Part.

4.13.4 Major maintenance Schemes may involve the resurfacing or reconstruction of the existing carriageway or major strengthening or reconstruction of bridges and other Structures. This will often have a significant impact on the existing motorway

communications infrastructure, the extent of this impact will depend on the scope of the civil engineering work.

4.13.5 The Operating Company shall take action to identify communications equipment, particularly buried cables, which are vulnerable to damage during Operations including:

(i) tree planting,

(ii) provision of noise barrier fencing,

(iii) reconstruction of carriageways,

(iv) resurfacing to a greater thickness "overlay",

(v) recabling contracts,

(vi) drainage alterations, and

(vii) provision of safety fencing.

4.13.6 Where the Operating Company has:

(i) undertaken resurfacing or patching work, or other work that has caused the sub-surface traffic detection loops to become inoperable, or

(ii) inadvertently caused such damage to sub-surface traffic detection loops through any other of its Operations,

the Operating Company shall reinstate the traffic detection loops or feeder cables in accordance with the *Specification for Highway Works* MCH1540 *Specification for the Installation of Detector Loops*.

4.13.7 The Operating Company shall give special consideration during the planning stages of any work to avoiding damage to existing services and cables.

4.13.8 Before commencing any work or moving heavy plant or equipment in the vicinity of communications and miscellaneous equipment, the Operating Company shall, in accordance with the *Special Requirements in Relation to Traffic Scotland*, confirm with the Director the details of the communications and miscellaneous equipment installed within the area.

4.13.9 The Operating Company shall locate the actual position of all communications and miscellaneous equipment and shall mark the locations prior to any work commencing in the vicinity of such equipment. The manner of such marking shall be dependent on the surface under which the equipment lies and such marking shall at all times be clearly visible to all parties working on the Site. The Operating Company shall notify all operatives, including sub-contractors, of the presence of communications and miscellaneous equipment, particularly cabling, together with the need to exercise extreme care and attention to ensure the prevention of any damage.

4.13.10 The Operating Company shall ensure that communications and miscellaneous equipment is protected from damage throughout the period of the work. The method of protection shall allow access to all communications and miscellaneous equipment for the repair or inspection of any damage within two hours of its notification. Depending on the extent of damage or the fault being repaired, access for vehicles, winches, cable drums and any further equipment may be required by the Traffic Scotland Operations and Infrastructure Service Contractor. Access to all chambers

and cabinets forming part of the communications and miscellaneous equipment shall be kept clear and unobstructed at all times. The Operating Company shall particularly note that surface mounted cabling should not under any circumstances be aerially suspended without the prior consent of, and then only in the manner specified by, the Traffic Scotland Operations and Infrastructure Service Contractor.

4.13.11 It is essential that the existing motorway communications system remains operational at all times. The longitudinal cable may be part of the national carrier network in addition to its function of carrying local data from signals, telephones and the like.

4.13.12 Any disconnections or connections to operational systems shall be made by the specialist contractor appointed by the Director.

4.13.13 The Operating Company shall not interfere with any equipment inside cabinets. The Operating Company shall not open any communications and miscellaneous equipment cabinet or isolate any communications and miscellaneous equipment electrical supply, other than to make a situation safe, without the consent of the relevant authority. Any disconnection or reconnection of communications and miscellaneous equipment shall be undertaken by the Relevant Organisation or the specialist contractor appointed by the Director.

4.13.14 If the Operating Company discovers any faults and defects with the specialist technology elements of the communications and miscellaneous equipment, these shall be reported to the Traffic Scotland Operations and Infrastructure Service Contractor within 24 hours.

4.14 Geotechnical Assets

4.14.1 Geotechnical assets include cuttings and embankments and a wide range of natural geological strata and man-made materials, many of which may have been reworked, mixed or modified. These materials may also be supported, strengthened or drained to aid stability or reduce subsidence.

4.14.2 Geotechnical assets may be in the ownership of the adjacent land owner. Where they are not the responsibility of the Director, it is the landowner's responsibility to maintain the stability of the assets to prevent them from affecting the Trunk Roads within the Unit adversely. The Operating Company shall notify adjacent landowners, in writing, of any potential geotechnical problems on their land which could affect the Trunk Roads within the Unit and liaise with the landowner regarding the necessary remedial action. Copies of all correspondence shall be forwarded to the Director. The Operating Company shall report any recommendations regarding remedial action and any failures of the landowners in fulfilling their responsibilities to the Director.

4.14.3 Guidance on inspections by the Operating Company and on geotechnical features, their identification and the procedures for repairs shall be as detailed in the *Design Manual for Roads and Bridges*.

4.14.4 Detailed Inspections of geotechnical assets shall be carried out at intervals not exceeding 12 months.

4.14.5 Detailed Inspections of specific areas shall be carried out at the intervals referred to in Annex 7.1/C of this Part.

4.14.6 Maintenance of geotechnical assets shall be carried out as necessary in accordance with clause 6130AR of the Specification and shall include the removal of debris from behind netting, in rock traps and from behind rock fences.

4.15 Grassed Areas

4.15.1 Grassed areas include verges, central reserves, cuttings, embankments and other areas.

Grassed areas shall be managed and maintained to minimise risks to road users and road workers, minimise the spread or increase of injurious weeds, conserve designated and protected habitats/species, encourage biodiversity where appropriate and provide amenity value.

4.15.2 The Operating Company shall submit a grass cutting programme to the litter authority no later than 75 Working Days prior to the start of each Annual Period and no later than 25 Working Days prior to grass cutting Operations. The Operating Company shall liaise with the litter authority to coordinate litter picking Operations prior to grass cutting Operations.

4.15.3 Detailed Inspections of grassed areas shall be carried out as necessary to meet the requirements of paragraph 4.15 and in order to provide the relevant data to accurately populate the annual Grassland Report required under Annex 7.4/A of Schedule 7 Part 4.

4.15.4 During Detailed Inspections, the accuracy of inventory areas, locations and attributes shall be checked and any necessary amendments made to the relevant inventory item in the routine maintenance and management function of the Integrated Roads Information System.

4.15.5 Maintenance of grassed areas shall be carried out in accordance with clause 3007 and appendix 30/7 of the Specification. The Operating Company shall carry out maintenance of grassed areas such that grassed areas comply with the performance requirements and targets for performance of Table 4.15.1. Irrespective of grass height, areas subject to high amenity grass cutting and areas detailed in Annex 7.1/A shall be cut to the minimum height detailed in clause 3007 of the Specification with intervals not exceeding 14 days between cuts during the period March 1 to September 30 each year.

Maintenance shall include cutting and edging. The maintenance record entered in the routine maintenance and management function of the Integrated Roads Information System shall include details of the main cut, strimming, the percentage of area not cut, reasons for incomplete cutting and any other problems encountered.

4.15.6 Maintenance of grassed areas shall include weed control in accordance with clause 3002 of the Specification.

Table 4.15.1 - Outcome Specification Requirements for Grassed Areas

Item	Performance Requirement	Inspection and or Measurement Method	Target for Performance
	Grassed areas shall be maintained to comply with the following requirements:		
1	Vegetative growth does not impede: ○ sight lines at junctions, access points and bends, or ○ visibility of signs and signals, or ○ footways and accesses.	Visual inspection of entire Auditable Section	100%
2	No hazard is caused by vegetative growth or the associated maintenance Operations.	Visual inspection of entire Auditable Section	100%
3.1	a) Height of sward is within the limits described for Grass Cutting – High Frequency b) areas to receive Grass Cutting – High frequency and detailed in Annex 7.1/A are cut to minimum height at intervals between cuts not exceeding 14 days.	a) A sward height measurement will be deemed to be the average of 10 measurements of sward height taken evenly spread over a 50 square metre area. One set of measurements for Grass Cutting – High Frequency per Auditable Section. b) Review of Operating Company Records	100%

Item	Performance Requirement	Inspection and or Measurement Method	Target for Performance
3.2	Height of sward is within the limits described for Grass Cutting – Medium Frequency	A sward height measurement will be deemed to be the average of 10 measurements of sward height taken evenly spread over a 50 square metre area. One set of measurements for Grass Cutting – Medium Frequency per Auditable Section.	100%
3.3	Height of sward is within the limits described for Grass Cutting – Low Frequency	A sward height measurement will be deemed to be the average of 10 measurements of sward height taken evenly spread over a 50 square metre area. One set of measurements for Grass Cutting – Low Frequency per Auditable Section.	100%
3.4	Requirements for Grass Cutting – Minimal Frequency are met	Visual inspection for hazard and biodiversity requirements. Inspection records and reports to determine alternate year cutting requirements. Visual inspection, inspection records and reports relevant to Grass Cutting – Minimal Frequency for the whole Auditable Section shall be taken into account.	100%
4	All other requirements of the Specification are complied with.	Ad hoc inspection and reports	100%

4.15.7 Between 1 April and 30 September, and between 1 March and 31 March in each Annual Period, the Operating Company shall carry out random Operating Company's Audit Inspections of Auditable Sections containing grassed areas to ensure compliance with the Scottish Ministers' Requirements. Such Operating Company's Audit Inspections will be carried out each month. The Operating Company will ensure

that the number and location of such Operating Company's Audit Inspections is sufficient to measure performance of all the requirements of Table 4.15.1 across:

(i) a minimum of 14% of the grassed areas of the Unit each Month ensuring that the frequency categories of grass cutting referred to in Items 3.1 to 3.4 of Table 4.15.1 are inspected pro rata to the proportion of such frequency categories on the Unit, and

(ii) a minimum of 100% of the grassed areas of the Unit in each Annual Period.

4.16 Bulb and Wildflower Areas

4.16.1 Bulb and wildflower areas are areas of naturalised or planted flowers.

4.16.2 Detailed Inspections of bulb and wildflower areas shall be carried out during their flowering season at intervals not exceeding 12 months.

4.16.3 During Detailed Inspections, the accuracy of inventory areas, locations and attributes shall be checked and any necessary amendments made to the relevant inventory item in the routine maintenance and management function of the Integrated Roads Information System.

4.16.4 Maintenance of bulb and wildflower areas shall be carried out in accordance with clause 3007 of the Specification and at the frequencies referred to in the Specification.

4.16.5 Maintenance of bulb and wildflower areas shall include weed control in accordance with clause 3002 of the Specification.

4.17 Woodland Areas and Trees

4.17.1 Detailed Inspections of all woodland areas and trees shall be carried out at intervals not exceeding 12 months.

4.17.2 During Detailed Inspections, the accuracy of inventory areas, locations and attributes shall be checked and any necessary amendments made to the relevant inventory item in the routine maintenance and management function of the Integrated Roads Information System.

4.17.3 Detailed Inspections of all mature woodland areas and trees shall be carried out by a qualified arboriculturist, consented to in writing by the Director, at intervals not exceeding five years. A report detailing the condition and any recommended actions shall be completed within 25 Working Days of the inspection of each area or individual tree and shall be attached to the relevant routine maintenance and management function of the Integrated Roads Information System inspection and inventory Record.

4.17.4 Maintenance of woodland areas and trees shall be carried out in accordance with clause 3010 of the Specification and at the frequencies referred to in the Specification.

4.17.5 Maintenance of woodland areas and trees shall include weed control in accordance with clause 3002 of the Specification.

4.18 Scrub Areas, Shrub Areas and Hedges

4.18.1 Detailed Inspections of scrub areas, shrub areas and hedges shall be carried out during their growing season at intervals not exceeding 12 months.

4.18.2 During Detailed Inspections, the accuracy of inventory areas, locations and attributes shall be checked and any necessary amendments made to the relevant inventory item

in the routine maintenance and management function of the Integrated Roads Information System.

4.18.3 Maintenance of scrub areas, shrub areas and hedges shall be carried out in accordance with clause 3010 of the Specification.

4.18.4 Maintenance of scrub areas, shrub areas and hedges shall include weed control in accordance with clause 3002 of the Specification.

4.19 Wetland Areas

4.19.1 Wetland areas include waterbodies such as lagoons, balancing ponds, attenuation Structures and associated inlets, outlets, reed beds and marginal plants.

4.19.2 Detailed Inspections of wetland areas shall be carried out at intervals not exceeding 12 months.

4.19.3 During Detailed Inspections, the accuracy of inventory areas, locations and attributes shall be checked and any necessary amendments made to the relevant inventory item in the routine maintenance and management function of the Integrated Roads Information System.

4.19.4 Maintenance of wetland areas shall be carried out in accordance with clause 3011 of the Specification and at the frequencies referred to in the Specification.

4.19.5 Maintenance of wetland areas shall include weed control in accordance with clause 3002 of the Specification.

4.20 Special Ecological Measures

4.20.1 Special ecological measures such as mammal proof fencing, noise barriers,, mammal underpasses, bat bridges and all other provisions for wildlife.

4.20.2 Detailed Inspections of all special ecological measures shall be carried out at intervals not exceeding 24 months.

4.20.3 During Detailed Inspections, the accuracy of inventory areas, locations and attributes shall be checked and any necessary amendments made to the relevant inventory item in the routine maintenance and management function of the Integrated Roads Information System.

4.20.4 Maintenance of special ecological measures shall be in accordance with clause 3012 of the Specification and at the frequencies referred to in the Specification.

4.20.5 Maintenance of special ecological measures shall include weed control in accordance with clause 3002 of the Specification.

4.21 Invasive Species

4.21.1 Invasive species include:

(i) broad leafed dock,

(ii) curled dock,

(iii) common ragwort,

(iv) creeping thistle,

(v) spear thistle,

(vi) Himalayan balsam,

(vii) Japanese knotweed,

(viii) giant hogweed,

(ix) rhododendron ponticum,

(x) rosebay willow herb,

(xi) horsetail,

(xii) oil seed rape, and

(xiii) rabbits.

This list is not exhaustive and the requirements of paragraphs 4.21.2 to 4.21.4 shall apply to any other species which is generally considered to be invasive.

4.21.2 Detailed Inspections for all invasive species shall be carried out at intervals not exceeding 12 months and for plant based invasive species this shall be during their growing season.

4.21.3 During Detailed Inspections, the accuracy of inventory areas, locations and attributes shall be checked and any necessary amendments made to the relevant inventory item in the routine maintenance and management function of the Integrated Roads Information System.

4.21.4 Maintenance of plant based invasive species shall include weed control in accordance with clause 3002 of the Specification.

4.21.5 Annex 7.1/A of this Part lists additional local requirements which apply to maintenance of invasive species.

4.22 Vehicle Restraint Systems

4.22.1 Vehicle restraint systems include tensioned and untensioned corrugated beam safety fence, open box beam safety fence, tensioned rectangular hollow section safety fence, wire rope safety fence, concrete barriers, moveable barriers and crash cushions. The following requirements do not relate to parapets on Structures.

4.22.2 The Operating Company shall carry out Detailed Inspections of all vehicle restraint systems (including tensioning devices) at intervals not exceeding two years. The Operating Company shall complete Detailed Inspection forms in accordance with British Standard 7669 Part 3:1994 for each inventory item and attach the completed form to the relevant inventory item in the routine maintenance and management function of the Integrated Roads Information System within four days of the inspection being carried out. Re-tensioning shall not be carried out as part of Detailed Inspections.

4.22.3 Within 25 Working Days of completion of each Detailed Inspection, the Operating Company shall prepare a report on re-tensioning of the vehicle restraint systems which have been inspected (including the replacement of any components necessary) and attach this to the routine maintenance and management function of the Integrated Roads Information System.

4.22.4 On receipt of the Director's written consent to this report (and within four months of carrying out the Detailed Inspections) the Operating Company shall undertake the re-tensioning of vehicle restraint systems in accordance with the manufacturers'

maintenance guidelines and the requirements of clause 472AR of the Specification. Whenever practical, the Operating Company shall carry out re-tensioning exercises under warm ambient conditions, when the stipulated tensions in the components are significantly lowered.

4.22.5 The Operating Company shall inspect moveable barriers at intervals not exceeding six months and ensure that these are maintained in accordance with the manufacturer's requirements. The Operating Company shall undertake trial openings at regular intervals, not exceeding 2 years, to ensure that when required the barriers can be moved from the closed position to the open position within 30 minutes of receiving an instruction to do so either by the Director or the police. The Operating Company shall maintain Records to provide evidence of each trial opening.

4.23 Pedestrian Restraint Systems

4.23.1 Detailed Inspections of all pedestrian restraint systems shall be carried out at intervals not exceeding 12 months.

4.24 Fences, Walls, Screens and Noise Barriers

4.24.1 Fences, walls, screens and noise barriers include walls, screen fences, snow fences and noise barriers which are the responsibility of the Scottish Ministers. The following requirements do not relate to retaining walls which shall be regarded as Structures.

4.24.2 Detailed Inspections of fences, walls, screen fences, snow fences and noise barriers shall be carried out by the Operating Company at intervals not exceeding 12 months.

4.25 Road Markings

4.25.1 Undertaking permanent repairs to Defects in road markings shall be carried out in accordance with the requirements detailed in the *Design Manual for Roads and Bridges*.

4.25.2 Detailed Inspections of road markings shall be carried out in accordance with the methods of inspection and frequencies detailed in the *Design Manual for Roads and Bridges*.

4.25.3 As part of each Detailed Inspection, the Operating Company shall summarise the findings of the road marking surveys, inspections and measurements and include this information as part of the Bid submission process.

4.25.4 Results of handheld retroreflectivity and skid resistance measurements shall be attached to the appropriate inventory items in the routine maintenance and management function of the Integrated Roads Information System.

4.26 Road Studs

4.26.1 Road studs include retro reflective and non reflective road studs of all types and colours.

4.26.2 Undertaking permanent repairs to Defects in road studs shall be carried out in accordance with the requirements detailed in the *Design Manual for Roads and Bridges*.

4.26.3 Detailed Inspections of road studs shall be carried out in accordance with the inspection methods and frequencies detailed in the *Design Manual for Roads and Bridges*, except that routine visual inspections shall be carried out at intervals not

exceeding six months during daylight and inspections for reflective capability shall be carried out at intervals not exceeding six months during the hours of darkness.

4.26.4 Detailed Inspections of intelligent road studs shall be carried out in accordance with the manufacturer's recommendations.

4.26.5 Maintenance of intelligent road studs shall be carried out in accordance with the manufacturer's recommendations.

4.27 Road Traffic Signs

4.27.1 Road traffic signs shall include all permanent road traffic signs, network customer information signs, all permanent bollards, all permanent marker posts, telephone hoods, refuge beacons and the surfaces of vehicle road restraint systems which have been painted for road safety purposes. Road traffic signs shall also include all authorised signs owned by third parties including tourist signs, boundary signs, roadside services signs, motoring organisation signs, Ministry of Defence signs, or any other authorised signs.

4.27.2 Detailed Inspections of road traffic signs shall be carried out in accordance with the types of inspection and frequencies referred to in the *Design Manual for Roads and Bridges* with the exception of inspections of electrical apparatus which shall be carried out in accordance with paragraph 4.29 of this Part.

4.27.3 The measured coefficient of retroreflectivity results shall be recorded against each relevant inventory item in the routine maintenance and management function of the Integrated Roads Information System.

4.27.4 Maintenance of road traffic signs shall be carried out in accordance with clause 6119AR of the Specification and the frequencies referred to in clause 5.1 of TD 25/01 of the *Design Manual for Roads and Bridges* with the exception of maintenance of electrical apparatus which shall be carried out in accordance with paragraph 4.29 of this Part.

4.28 Traffic Signals

4.28.1 Traffic signals include all automated traffic signals, pedestrian controlled signals and their associated equipment.

4.28.2 Where traffic signals are monitored remotely by a local roads authority, the maintenance and operation of such traffic signals shall remain the responsibility of the local roads authority. The Operating Company shall maintain the outstation and its associated equipment including the communications line.

4.28.3 The inspection and maintenance of traffic signals which are the responsibility of the local roads authority shall be undertaken by the Operating Company in liaison with the local roads authority. The Operating Company shall give the local roads authority a minimum of 10 Working Days' notice of any inspection or planned maintenance activity that may require the signals to be off central control, switched off or which is likely to have a significant impact on the normal flow of traffic. Where the inspection is to include an operational review of the performance of the traffic signals, the Operating Company shall consult with the local roads authority to identify any operational issues of which the local roads authority may be aware that should be considered within the review.

4.28.4 No later than 12 months after Commencement of Service Date 1, the Operating Company shall undertake a full review of the signal equipment for which it is responsible to establish a detailed inventory of the existing equipment, facilities and special provisions and plans in use on the network. This information shall be used to provide and maintain the following records for each installation:

(i) installation drawing,

(ii) electrical supply and distribution details,

(iii) designer's *Specification for Traffic Signal Controller TR2500,* (or equivalent),

(iv) final Specification *for Traffic Signal Controller* TR2500 (or equivalent),

(v) communications details,

(vi) detector location plans,

(vii) operational strategy,

(viii) valid electrical test certificate,

(ix) valid detector test certificate,

(x) outstation transmission unit and or remote equipment wiring schedule, and

(xi) Site maintenance log book.

No later than 12 months after Commencement of Service Date 2, the Operating Company shall undertake a full review of the signal equipment for which it is responsible to update and add details to the detailed inventory of the existing equipment, facilities and special provisions and plans in use on Network 2.

4.28.5 All Site information shall be maintained in a central repository and in the controller cabinet, with the exception of the Site maintenance log book which shall be retained only within the controller cabinet and updated on every visit.

4.28.6 Site information and Drawings shall be amended by the Operating Company within 10 Working Days of any change being effected.

4.28.7 The Operating Company shall review the Records in respect of Network 1 during the first Annual Period following Commencement of Service Date 1 and review the Records in respect of Network 2 during the first Annual Period following Commencement of Service Date 2. Following each such review and in each case no later than 30 days prior to the end of the relevant Annual Period the Operating Company shall advise the Director of any discrepancies or missing items and shall thereafter take such action as the Director may require in relation to any such discrepancies or missing items.

4.28.8 Using the information arising from the equipment review required by paragraph 4.28.4 of this Part, the Operating Company shall develop and maintain a network operational strategy covering all traffic signal equipment within the Unit. This will consist of two elements:

(i) a high level strategy detailing:

(a) control strategies to be used, such as MOVA or SCOOT control systems and the like, and locations where these are currently in use,

(ii) a low level strategy to address the operational issues for each individual installation including:

(a) control strategy hierarchy,

(b) operational plans,

(c) vehicle priority actions, and

(d) any maintenance restrictions.

4.28.9 The network operational strategy shall be submitted to the Director for consent no later than six months after Commencement of Service Date 1. The Director shall notify the Operating Company of his consent, or otherwise, including reasons, within six weeks of such submission.

4.28.10 The consented to network operational strategy shall be reviewed during each Annual Period with any amendments required, or confirmation that no amendments are necessary, arising from the review to be submitted to the Director for consent no later than 25 Working Days prior to the end of each Annual Period.

4.28.11 The following traffic signals Category 1 Defects shall be attended within three hours of the Operating Company being aware of the Defect, be restored to operation within two hours of first attendance and shall be repaired fully within 24 hours of first attendance:

(i) all signals unlit,

(ii) signals failing to change,

(iii) signals giving conflicting indications,

(iv) audible or tactile warnings not working,

(v) red or amber lamp unlit,

(vi) equipment damaged or in a dangerous condition, and

(vii) Defects likely to cause a hazard or abnormal and excessive delay.

4.28.12 The following response times shall apply to Category 1 Defects for dark lamps excluding red and amber*:*

(i) attendance within six hours of the Operating Company being aware of the Defect,

(ii) restore within two hours of first attendance, and

(iii) full repair within 24 hours of first attendance.

4.28.13 The following response times shall apply to Category 1 Defects resulting from failed or damaged below ground detection equipment:

(i) attendance within six hours of the Operating Company being aware of the Defect, and

(ii) full repair within 10 Working Days of first attendance.

4.28.14 Where a Defect is found to be caused by a fault with the electrical supply, the Operating Company shall report this fault to the relevant electricity supply company and liaise with them on Site where necessary. Any costs incurred for an avoidable

visit on Site by the electricity supply company shall be borne by the Operating Company.

4.28.15 Where a Defect is found to be caused by a fault with the communications line, the Operating Company shall report this fault to the relevant telephone company and liaise with them on Site where necessary. Any costs incurred for an avoidable visit on Site by the telephone company shall be borne by the Operating Company.

4.28.16 All Records relating to inspection and maintenance activities shall be attached to the relevant inventory or inspection item in the routine maintenance and management function of the Integrated Roads Information System.

4.28.17 Detailed Inspections of traffic signals shall be carried out in accordance with TD 24/97 of the *Design Manual for Roads and Bridges*, except that items 1 to 12 of table 2.2 of TD 24/97 shall be carried out at intervals not exceeding one month.

4.28.18 Detailed Inspections to ensure the correct labelling of protective devices, protective enclosures and earthing and or bonding points shall be carried out at intervals not exceeding one month.

4.28.19 Detailed Inspections and testing for electrical safety of electrical apparatus associated with any traffic signals shall be carried out at intervals not exceeding five years and on approximately 20 percent of the network in each Annual Period. Testing shall include the testing of inductive loops in accordance with Annex A of TD24/97 of the *Design Manual for Roads and Bridges*. The results of electrical testing shall be recorded on an in-service report form as detailed in *Local Transport Note 1/98, Appendix B* and attached to the relevant inspection Record in the routine maintenance and management function of the Integrated Roads Information System. A method statement for electrical testing shall be submitted to the Director for consent no later than 25 Working Days after Commencement of Service Date 1. No later than 25 Working Days after Commencement of Service Date 2, the Operating Company shall submit an update to the method statement for electrical testing to the Director for consent. Such update shall take into account any additional requirements for Network 2.

4.28.20 Detailed Inspections to review the operation of the traffic signal settings shall be carried out at intervals not exceeding 12 months. No later than 25 Working Days after Commencement of Service Date 1, the Operating Company shall submit a procedural manual for the undertaking of operational reviews to the Director for consent. No later than 25 Working Days after Commencement of Service Date 2, the Operating Company shall submit an update to the procedural manual for the undertaking of operational reviews to the Director for consent. Such update shall take into account any additional requirements for Network 2.

4.28.21 The annual operational review shall be carried out by suitably experienced persons and shall include the following:

(i) operation of the traffic signal settings for control of traffic, including any additional control systems,

(ii) on-street assessment including measurement of queue lengths,

(iii) updating traffic models, using LINSIG or TRANSYT as specified,

(iv) updating controller settings,

(v) validation of SCOOT and MOVA control systems as specified, and

(vi) production of the performance report in accordance with paragraph 4.28.23 of this Part.

4.28.22 Where traffic signals are monitored remotely or controlled by a local roads authority or the Traffic Scotland Operations and Infrastructure Services Contractor, the Operating Company shall consult with the local roads authority or the Traffic Scotland Operations and Infrastructure Services Contractor to identify any additional operational issues that should be considered within the annual operational review.

4.28.23 On completion of the annual operational review, the Operating Company shall submit a performance report to the Director summarising the performance of each installation including the methodology adopted, issues identified and the actions taken.

4.28.24 The Operating Company shall validate SCOOT and MOVA control systems during the first Annual Period and shall then revalidate at intervals not exceeding three years. In the event of a significant change to the road layout occurring outwith the specified validation periods for SCOOT and MOVA, the Operating Company shall revalidate the control system at the affected junctions as required. Where the urban traffic control facility is provided by a local roads authority, the Operating Company shall give a minimum of 10 Working Days' notice of any validation work and comply with the local roads authority's requirements for access to the urban traffic control facility.

4.28.25 Maintenance of traffic signals shall be carried out in accordance with clause 6121AR of the Specification and TD 24/97 of the *Design Manual for Roads and Bridges*.

4.29 Roadside Electrical Assets and Power Supplies

4.29.1 Roadside electrical assets, road lighting and power supplies include roadside electrical assets, road lighting and power supplies. Prior to Commencement of Service Date 1 the Operating Company shall submit method statements and maintenance procedures in relation to the Detailed Inspection and maintenance of roadside electrical assets, road lighting and power supplies to the Director for consent. Prior to Commencement of Service Date 2, such method statements and maintenance procedures shall be updated as required for Network 2 and submitted to the Director for consent. Detailed Inspections shall be in accordance with paragraph 1.8 of this Part, TD23 of the *Design Manual for Roads and Bridges*, and the *Transport Scotland Trunk Road Inspection Manual.* Roadside electrical assets, road lighting and power supplies are as listed in Schedule 4 Part 3.

4.29.2 Detailed Inspections and testing shall be carried out by the Operating Company in accordance with the requirements and timescales of Transport Scotland guidance document *LDS8023 – Electrical Maintenance Guidelines*.

4.29.3 Detailed Inspections shall be carried out by the Operating Company on lighting and associated road side electrical assets in accordance with the initial verification, periodic inspection and testing and minor work certification requirements of Transport Scotland guidance document *LDS8005 – Electrical Inspection and Testing of Lighting and associated electrical apparatus and installations with Model Forms*. The Operating Company shall carry out periodic inspection and testing on approximately twenty percent of the electrical assets in each Annual Period. All electrical assets shall be tested at least once every five years. The Operating Company shall produce a

programme of work for periodic inspection and testing, coinciding where possible with the Detailed Inspections.

4.29.4 Detailed Inspections shall be carried out by the Operating Company on non lighting roadside electrical assets in accordance with the initial verification, periodic inspection and testing and minor work certification requirements of British Standard 7671:2008 incorporating Amendment No 1:2011 and associated *Guidance Note 3 (Inspection & Testing)* together with the manufacturer's requirements for such assets. The Operating Company shall carry out periodic inspection and testing on approximately twenty percent of the electrical assets in each Annual Period. All electrical assets shall be tested at least once every five years. The Operating Company shall produce a programme of work for periodic inspection and testing, coinciding where possible with the Detailed Inspections.

4.29.5 At the end of each quarter, the Operating Company shall submit to the Director the periodic inspection and testing certification, including periodic inspection reports, schedules of inspections, schedules of circuit details and test results.

4.29.6 Detailed Inspections shall be carried out by the Operating Company on portable and transportable equipment which forms part of the electrical installation in compliance with the *Electricity at Work Regulations 1989*.

4.29.7 The Operating Company shall identify the portable or transportable equipment for the inclusion in or exclusion from the electrical installation periodic testing. The details of the tests shall be agreed with the Director, and consented to as 'extent and limitations' section in accordance with the requirements of British Standard 7671:2008 incorporating Amendment No 1:2011 and associated *Guidance Note 3 (Inspection & Testing)*.

4.29.8 The Operating Company shall obtain consent from the Director prior to carrying out structural work, such as repairs, adjustments, re-riveting, part replacement, modifications and re-welding.

4.29.9 Maintenance shall be carried out by the Operating Company in accordance with the requirements of Transport Scotland guidance document *LDS8023 – Electrical Maintenance Guidelines* and clauses 6120AR, 6122AR and 6124AR of the Specification.

4.29.10 Bulk lamp changes shall be carried out by the Operating Company at the intervals given in Table 4.29.10.A. This table replaces tables 4 and 5 in TD 23/99 of the *Design Manual for Roads and Bridges*. When carrying out bulk lamp changes the Operating Company shall take cognisance of the requirements relating to the lighting central management system in accordance with paragraphs 4.29.23 of this Part.

Table 4.29.10.A – Maximum Intervals for Bulk Lamp Changes

Lamp Type	Nomenclature as TD 23	Bulk Change Interval For Dusk to Dawn Operation	Bulk Change Interval For 24 Hour Per Day Operation
Low pressure Sodium	SOX	24 months	12 months
High pressure Mercury	MBFU		
High pressure	MCFE		

fluorescent	SL PL		
High pressure sodium	SON SON-T	36 months	18 months
Low pressure sodium	SOX-E		
Ceramic Metal Halide	CMH		

4.29.11 The following response times shall apply to Category 1 Defects:

(i) permanent repair within 24 hours.

4.29.12 The Operating Company shall comply with the procedures for shared access to the electrical assets as detailed in Annex 7.1/E of this Part.

4.29.13 Where electrical assets are located adjacent to the Trunk Road boundary within the Unit, the Operating Company shall comply with Transport Scotland guidance document *LDS8022 – Guidance on the Definition of Electrical Maintenance Responsibilities and Boundaries in relation to Roadside Electrical Equipment and Lighting*.

4.29.14 The Operating Company may, if necessary, seek the assistance of the relevant local authority to meet the requirements of this Part.

4.29.15 The Operating Company shall liaise with local authorities in accordance with Transport Scotland guidance document *LDS8017 - Special Requirements for Local Authority Roadside Electrical Apparatus*.

4.29.16 The Operating Company shall remove any redundant electrical assets in accordance with Transport Scotland guidance document *LDS8013 – Guidance on making roadside Electrical Apparatus obsolete, redundant and derelict*.

4.29.17 The Operating Company shall report any failure of air or sea navigational aids to the relevant authority and respond to the Defect in accordance with the requirements of this Part.

4.29.18 The Operating Company shall make reference to Transport Scotland guidance document *LDS8025 – Typical Drawings for Roadside Electrical Apparatus*.

4.29.19 The Operating Company shall ensure that all electrically energised assets are identified by a suitably attached ID label typically in accordance with *LDS8001 – Roadside Electrical Apparatus and Lighting Identification System* and as required by TD23/99 of the *Design Manual for Roads and Bridges*.

4.29.20 The Operating Company shall ensure that all electrical feeder pillars, supply cabinets, distribution pillars and similar enclosures have an accurate, up to date electrical schematic, equipment layout table and or diagram and any other documents required to ensure safe working correctly stowed in accordance with TD23/99 of the *Design Manual for Roads and Bridges*. Such items shall be laminated or similarly protected.

4.29.21 The Operating Company shall ensure that where required all roadside electrical assets are fitted with conspicuity banding in accordance with the guidance in *LDS8001*

Roadside Electrical Apparatus and Lighting Identification System and in compliance with the Equality Act 2010.

4.29.22 The Operating Company shall ensure that where suitable supplies for festive lighting are provided, either separately or as part of the road lighting installation, such supplies and arrangements for their provision shall be in accordance with the guidance contained in *LDS8021 – Festive Decorations on the Trunk Road Network*.

4.29.23 At the discretion of the Director, following on from the deployment of the lighting central management system, the intervals for the bulk lamp change and other operational schedules on the Trunk Road network may be modified.

4.30 Weather Stations

4.30.1 Detailed Inspections and calibration checks on Weather Stations shall be carried out in accordance with the manufacturers' recommendations during August to September and December to February in each Annual Period except for closed circuit television equipment which shall have maintenance carried out as necessary throughout each Annual Period.

4.30.2 These Detailed Inspections and calibration checks shall be carried out by suitably qualified personnel consented to in writing by the Director. Calibration and test Certificates shall be attached to the relevant inventory Records in the routine maintenance and management function of the Integrated Roads Information System.

4.30.3 The following response and repair times shall apply to Category 1 Defects:

(i) closed circuit television equipment except for the image server and video link:

(a) Winter Service Period – 12 hours, and

(b) non Winter Service Period – 24 hours,

(ii) closed circuit television image server and video link:

(a) throughout each Annual Period – two hours response with a repair within four hours,

(iii) all other Weather Station equipment: in accordance with paragraph 4.29 of this Part.

4.30.4 The Operating Company shall be responsible for reporting all Defects, liaising with specialist contractors and providing Defect status reports to the Traffic Scotland Operations and Infrastructure Services Contractor.

4.30.5 The Operating Company shall maintain, in accordance with the requirements of Schedule 5 Part 2, a written Record pertaining to all the actions it undertakes in connection with paragraph 4.30.4 of this Part.

4.30.6 Electrical maintenance and inspections for Weather Stations shall be carried out in accordance with paragraph 4.29 of this Part and as necessary throughout each Annual Period.

4.31 Arrester Beds

4.31.1 Detailed Inspections of arrester beds shall be carried out at intervals not exceeding six months.

4.31.2 As part of the Detailed Inspection, the Operating Company shall prepare a report on the condition of arrester beds which shall be attached to the relevant inventory item in the routine maintenance and management function of the Integrated Roads Information System.

4.31.3 The Operating Company's Detailed Inspection regime for the arrester beds shall ensure that the inspection identifies any deficiencies in the ability of the arrester bed to stop a heavy vehicle leaving the road.

4.31.4 Maintenance of arrester beds shall be in accordance with clause 712 of the Specification.

4.32 Snow Poles, Snow Gates, Snow Fences and Snow and Ice Hidden Message Signs

4.32.1 Detailed Inspections of snow poles, snow gates, snow fences and snow and ice hidden message signs shall be carried out during June or July in each Annual Period. Electrical maintenance and inspections shall be carried out in accordance with paragraph 4.29 of this Part.

4.32.2 No later than 7 August in each Annual Period, the Operating Company shall deliver Bids to the Director for the repair of Category 2 Defects in snow poles, snow gates, snow fences and snow and ice hidden message signs.

4.32.3 Subject to an Order, repairs of Category 2 Defects shall be carried out by the Operating Company prior to the commencement of the Winter Service Period.

4.33 Traffic Control Barriers

4.33.1 Detailed Inspections of traffic and emergency vehicle access control barriers to determine their structural condition and integrity shall be carried out at intervals not exceeding one year.

4.33.2 Detailed Inspections of mechanically and electrically operated traffic control barriers shall be carried out at intervals not exceeding one year or in accordance with the intervals stated in their maintenance manuals and manufacturers' instructions, where these are more frequent.

4.33.3 Detailed Inspections of electrically operated traffic control barriers shall be carried out in accordance with paragraph 4.29 of this Part.

4.33.4 Maintenance of electrically operated traffic control barriers shall be carried out in accordance with paragraph 4.29 of this Part.

4.34 Litter and Refuse

4.34.1 The benefits of collaborative working with litter authorities shall be examined by the Operating Company in accordance with the requirements of Schedule 3 Part 9.

4.34.2 The Operating Company shall liaise with the responsible litter authority sufficiently in advance of any planned traffic management on roads with speed limits of 50 miles per hour or greater that contain a central reserve in order to allow safe access for litter and refuse clearance activities.

4.34.3 The litter and refuse requirements detailed in paragraphs 4.34.4 to 4.34.14 of this Part relate to the Scottish Ministers' duty under the *Environmental Protection Act 1990* to keep the motorways and special roads identified in Schedule 3 Part 2 and the

additional local requirements identified in Annex 7.1/A of this Part clear of litter and refuse and to keep them clean.

4.34.4 The Operating Company shall carry out the requirements of the Scottish Ministers referred to in paragraph 4.34.3 and shall comply with the *Code of Practice on Litter and Refuse*.

4.34.5 Seasonal variations of accumulations shall be taken into consideration when formulating cleaning regimes.

4.34.6 References to grassed areas in the *Code of Practice for Litter and Refuse* include all areas of Trunk Roads within the Unit other than hard surfaced areas.

4.34.7 On Trunk Roads within the Unit, other than motorways and special roads, the local authority shall be responsible for the clearance of litter and refuse and keeping them clean in compliance with the *Environmental Protection Act 1990*.

4.34.8 Local authority compliance with the *Environmental Protection Act 1990* does not relieve the Director of his responsibility to keep all categories of Trunk Road within the Unit safe for the travelling public. Any litter or refuse that becomes a Category 1 Defect on the Unit shall be made safe by the Operating Company in accordance with the requirements of this Part. The Operating Company shall notify the local authority in writing, with a copy to the Director, if the standard of cleanliness falls below that required by the *Code of Practice for Litter and Refuse.*

4.34.9 Where a local authority does not carry out its statutory duty, the Operating Company shall provide a detailed report to the Director within 25 Working Days of becoming aware.

4.34.10 All Grade C and D litter areas, as defined by the *Code of Practice for Litter and Refuse,* shall be identified and recorded in the routine maintenance and management function of the Integrated Roads Information System. Grade A and B litter areas, as defined by the *Code of Practice for Litter and Refuse,* shall also be recorded when it is necessary to record the condition of the network.

4.34.11 A minimum of one before and one after photograph shall be attached to each Grade C and D litter Record in the routine maintenance and management function of the Integrated Roads Information System.

4.34.12 Detailed Inspections shall be carried out as necessary to ensure the Scottish Ministers comply at all times with the *Code of Practice on Litter and Refuse*.

4.34.13 The Operating Company may use Safety Inspections and Safety Patrols to identify litter areas but shall ensure areas not normally visible from the road and areas where litter is known to be a particular problem are inspected as necessary.

4.34.14 Maintenance in respect of litter and refuse shall be in accordance with clause 6108AR of the Specification.

4.35 Dead Animals, Objects and Cleaning

4.35.1 All dead animals shall be removed from the Unit. Dead animals which constitute a hazard or environmental risk will be removed immediately. All other dead animals will be removed within 24 hours of notification or discovery.

4.35.2 All domestic animals shall be examined for any identifying features including scanning for microchips. The Police shall be notified of any identifying features including tags,

tattoos and or microchip data found together with a brief description of the animal. The Operating Company shall attempt to contact the owner of the dead animal and shall keep the carcass of any domestic animal for a period of two weeks in conditions to prevent further deterioration in case the owner wishes to claim back the carcass. After this period, the Operating Company shall dispose of the carcass in accordance with the requirements of the local authority.

4.35.3 There shall be no requirement to keep the carcass of any non-domestic animal, which shall be disposed of in accordance with the requirements of the local authority.

4.35.4 Objects shall be removed in timescales appropriate to the prevailing circumstances and disposed of in accordance with the Scottish Ministers' Requirements.

4.35.5 The Unit will be cleaned, when required, in timescales appropriate to the prevailing circumstances.

4.35.6 Cleaning shall include as a minimum hand or mechanical sweeping of all hard areas, removal of objects, water supply, removal of sweepings and disposal of material and objects in accordance with the Scottish Ministers' Requirements.

4.36 Removal of Graffiti

4.36.1 Removal of graffiti shall include for painting where appropriate to return the asset to an appearance that is acceptable to the Director.

4.36.2 Graffiti includes paint, posters and encrusted deposits.

4.36.3 Detailed Inspections shall be undertaken as necessary to identify areas of graffiti on the network.

4.36.4 The following response times shall apply:

(i) offensive graffiti that is racist, religiously bigoted, inflammatory, political, sexually explicit or obscene shall be removed within two days of identification, and

(ii) all other graffiti shall be removed within 25 Working Days of identification.

4.37 Node Markers

4.37.1 Detailed Inspections of node markers shall be carried out by the Operating Company at intervals not exceeding 12 months and as necessary to ensure that all node markers on the Trunk Road network shall be accurately located and visible at all times.

4.37.2 During inspections, the node marker location shall be checked against the location coordinates and documents stored in the Integrated Roads Information System.

4.37.3 Any node markers that are found to be missing or defective shall be replaced by the Operating Company within 25 Working Days of their identification to the location described in the node marker location document.

4.37.4 Where the node marker location documents are no longer accurate due to changes such as moved speed limits, changed junction geometry or any other reference points, the Operating Company shall provide revised node marker location documents for consent by the Director and replace the node markers within 25 Working Days of receiving approval.

4.37.5 During the first Annual Period the Operating Company shall create node marker locations for all node markers, to the format shown in Annex 4.2/E of Schedule 4 Part 2, and submit them to the Director for consent.

4.37.6 The Director will maintain a copy of all node marker location documents he has consented to in the Integrated Roads Information System.

4.37.7 In all cases, node studs shall be installed in accordance with the Scottish Executive Advice Note *Node Marker Standards*.

4.38 Flooding

4.38.1 The Operating Company shall ensure that the drainage systems and associated Structures referred to in this Part are maintained in accordance with the requirements of paragraphs 4.3 to 4.12 and paragraph 4.39 of this Part to be structurally sound and able to remove water from trafficked surfaces and sub-layers without causing Pollution and flooding and that the effects of any flooding are mitigated.

4.38.2 Flooding shall be defined as a sufficient amount of water lying on the network which:

(i) represents a hazard to road users,

(ii) may interrupt the free flow of traffic, or

(iii) causes damage to other Structures or the carriageway.

4.38.3 Flooding may arise from a blockage or some other fault identified as a result of an inspection, patrol, report from an Emergency Service, report or complaint from the public or complaint from any other source. Flooding may also arise from a blockage or some other fault in drainage systems on adjoining properties or land which interfaces with the Trunk Road network drainage systems within the Unit.

4.38.4 Where immediate repairs do not remove the flooding, the Operating Company shall erect flood warning signs where any or all of the situations referred to in paragraph 4.38.2 of this Part occur.

4.38.5 A flooding report in the format shown in Annex 7.1/D of this Part shall be completed for each occurrence of flooding and attached to the relevant Defect Record in the routine maintenance and management function of the Integrated Roads Information System within four days. Additional documentation such as photographs, reports and the results of further investigation shall also be attached.

4.38.6 The Operating Company shall carry out Detailed Inspections during periods of wet weather:

(i) at known flooding Disruption Risk Sites, and

(ii) to identify other areas of flooding or evidence of flooding.

The Operating Company shall also carry out Detailed Inspections as necessary to identify any flooding reported as a result of an inspection, patrol, report from an Emergency Service, report or complaint from the public or complaint from any other source.

This is Annex 7.1/A to Schedule 7 Part 1 referred to in the foregoing Agreement between Scottish Ministers and Amey LG Limited.

SCOTTISH MINISTERS' REQUIREMENTS

SCHEDULE 7 PART 1

MANAGEMENT, INSPECTION AND MAINTENANCE

ANNEX 7.1/A – Additional Local Requirements

SCOTTISH MINISTERS' REQUIREMENTS

SCHEDULE 7 PART 1

MANAGEMENT, INSPECTION AND MAINTENANCE

ANNEX 7.1/A – Additional Local Requirements

1. Inspection and maintenance requirements for St Margaret's Marsh

(i) The Operating Company shall inspect the footways and sluices on a monthly basis and report Defects to the Director.

(ii) When instructed by the Director, the Operating Company shall adjust the sluice levels; potentially 10 to 20 times per year.

(iii) Invasive species control shall not be undertaken by the Operating Company without the consent of the Director in each instance.

(iv) Habitat management including reed management, scrub clearance and grass cutting as described in the *Forth Replacement Crossing St. Margaret's Marsh SSSI Management Plan* shall be undertaken by the Operating Company.

2. Litter and Refuse

The Operating Company shall maintain the following areas to a category 1 zone as set out in the *Code of Practice on Litter and Refuse*:

(i) footways and cycleways on the Forth Road Bridge,

(ii) service roads, footways, cycleways and adjacent grassed areas at the North and South abutments of the Forth Road Bridge, and

(iii) areas identified as items 23 to 29 and 30 on drawing S3P2-013 in Annex 3.2/J to Part 2 of Schedule 3.

The Operating Company shall maintain the following areas to a category 6 zone as set out in the *Code of Practice on Litter and Refuse*:

(i) areas identified as items 18 to 22, 31, 32, 51 and 53 on drawing S3P2-013 in Annex 3.2/J to Part 2 of Schedule 3.

(ii) areas identified as items 1 to 4 on drawing S3P2-014 in Annex 3.2/J to Part 2 of Schedule 3.

(iii) areas identified as items 5 to 8, 16 and 17 on drawing S3P2-015 in Annex 3.2/J to Part 2 of Schedule 3.

(iv) areas identified as items 9 to 15 and 33 to 44 on drawing S3P2-016 in Annex 3.2/J to Part 2 of Schedule 3.

(v) areas identified as items 44 to 50 and 41 on drawing S3P2-017 in Annex 3.2/J to Part 2 of Schedule 3.

(vi) areas identified as items 51, 52 and 53 on drawing S3P2-018 in Annex 3.2/J to Part 2 of Schedule 3.

(vii) areas identified as items 52 to 57 on drawing S3P2-019 in Annex 3.2/J to Part 2 of Schedule 3.

(viii) areas identified as items 57 to 67 and 68 to 72 on drawing S3P2-020 in Annex 3.2/J to Part 2 of Schedule 3.

(ix) areas identified as items 68, 60 and 72 on drawing S3P2-21 in Annex 3.2/J to Part 2 of Schedule 3.

The term "grassed areas" as referred to in the *Code of Practice on Litter and Refuse* shall be deemed to cover all areas which are not hard surfaced.

3. Grassed Areas

Areas shown green on Figure 7.1.1.A and Figure 7.1.1.B shall be subject to high amenity grass cutting.

4. Inspection and maintenance requirements for wooden benches

At appropriate times during each year the Scottish Minsters will provide wooden benches for public use at various locations on the Unit. Wooden benches for this purpose are included in the list of items in Schedule 5 Part 7, Annex 5.7/B.

The Operating Company shall:

(i) no later than 1 May in each Annual Period submit to the Director for consent a deployment plan identifying the proposed use of the wooden benches,

(ii) no later than 15 May in each Annual Period collect from storage and deploy the wooden benches in accordance with the consented deployment plan,

(iii) ensure that when the wooden benches are deployed they are in good repair, clean and safe for public use,

(iv) inspect and maintain the wooden benches, and

(v) between 15 September and 1 October in each Annual period return to store all of the wooden benches.

Figure 7.1.1.A – High Amenity Grass Cutting – Forth Road Bridge South

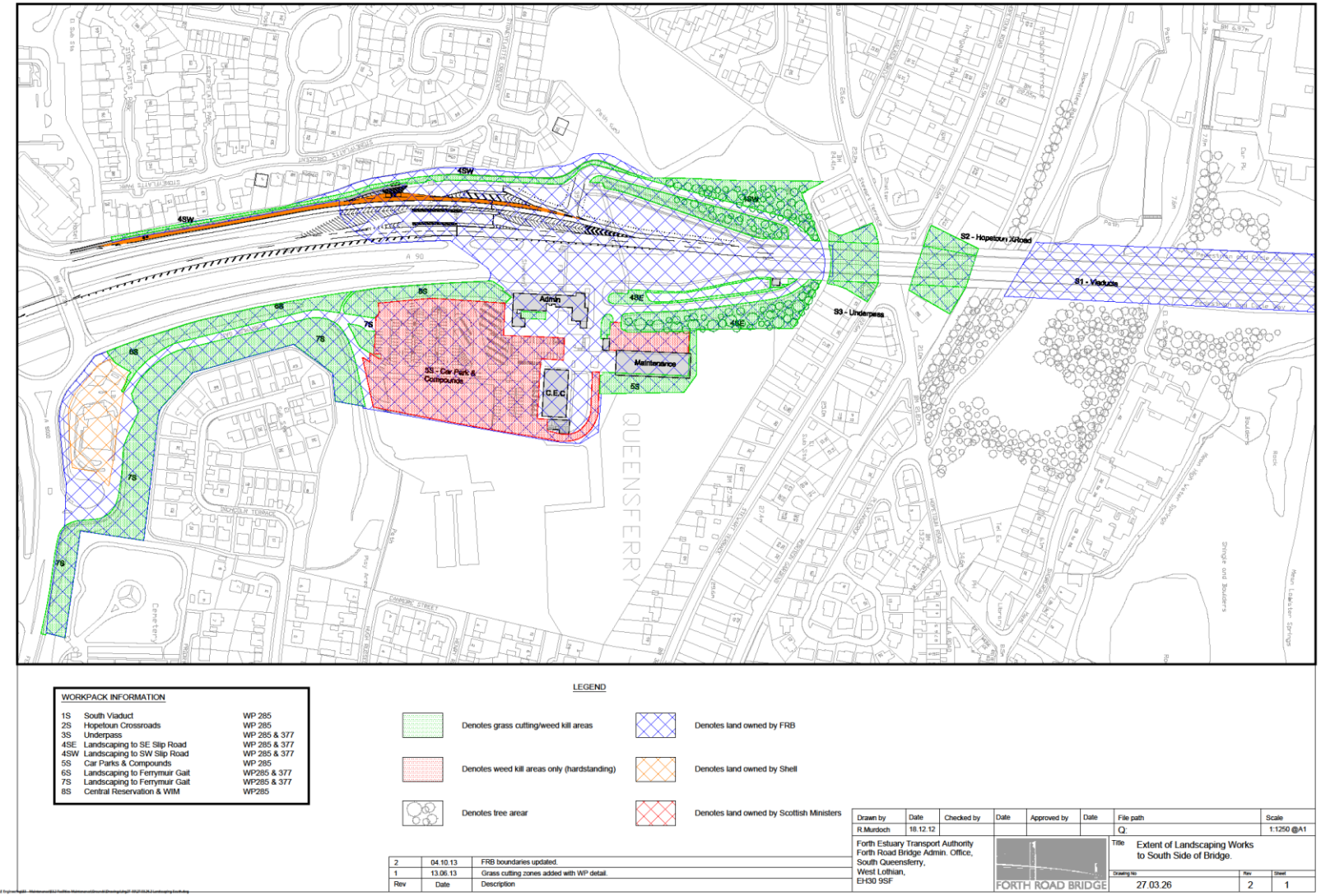

signed for and on behalf of The Scottish Ministers

……
Authorised Signatory

by ……Roy Brannen……

on …… December 2014……

at ……Glasgow……

signed for and on behalf of AMEY LG Limited

……
Director/Company Secretary/
Authorised Signatory*

by
……

on …… December 2014……

at ……Glasgow……

Figure 7.1.1.B – High Amenity Grass Cutting – Forth Road Bridge North

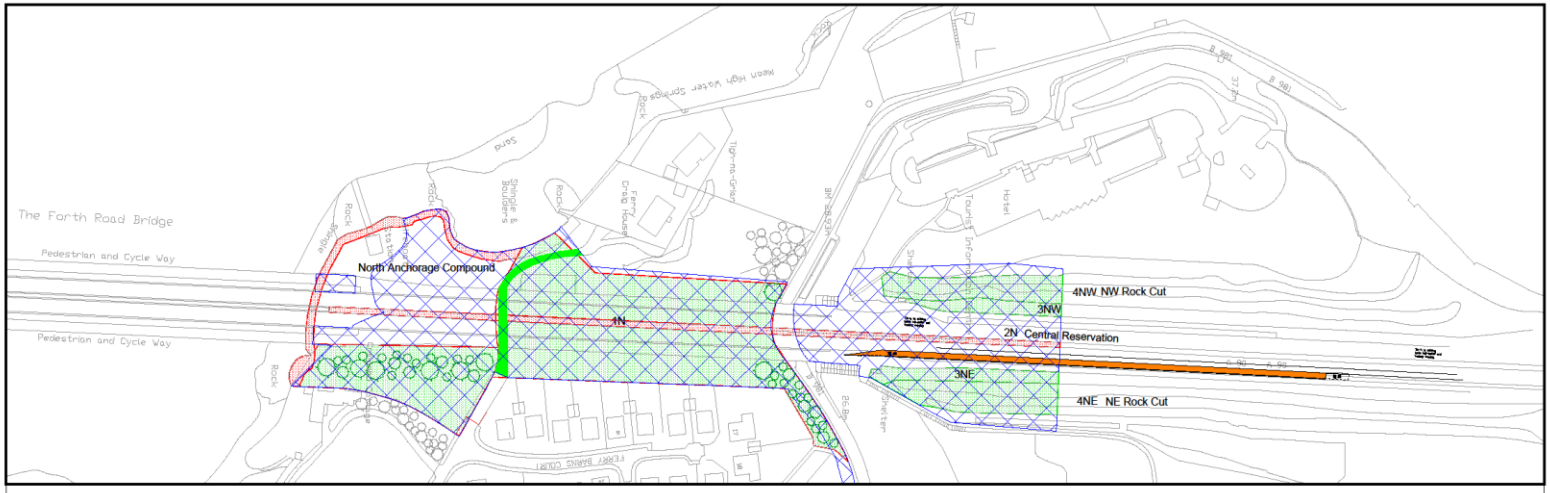

WORKPACK INFORMATION

1N	North Viaduct & North Anchorage	WP 285 & 377
2N	Central Reservation	WP 285
3NW	Vegetation adjacent to NW footpath	WP 285 & 377
3NE	Vegetatation adjacent to NE footpath	WP 285 & 377
4NW	North West Rockcut	WP 285 & 377
4NE	North East Rockcut	WP 285 & 377

LEGEND

Denotes grass cutting/weed kill areas

Denotes land owned by FRB

Denotes weed kill areas only (hardstanding)

Denotes tree arear

Rev	Date	Description	Signature	App'd
2	04.10.13	FRB Boundaries updated.		
1	13.06.13	Grass cutting zones added with WP detail.	RAM	

Drawn by	Date	Checked by	Date	Approved by	Date	File path	Scale
R.Murdoch	23.03.12					Q:	1:1000 @A1

Forth Estuary Transport Authority
Forth Road Bridge Admin. Office,
South Queensferry,
West Lothian,
EH30 9SF

FORTH ROAD BRIDGE

Title: Extent of Landscaping Works to North Side of Bridge.

Drawing No	Rev	Sheet
29.08.06	2	1

signed for and on behalf of The Scottish Ministers

.....
Authorised Signatory

by .....Roy Brannen.....

on ..... December 2014.....

at .....Glasgow.....

signed for and on behalf of AMEY LG Limited

.....
Director/Company Secretary/
Authorised Signatory*

by
.....

on ..... December 2014.....

at .....Glasgow.....

This is Annex 7.1/B to Schedule 7 Part 1 referred to in the foregoing Agreement between Scottish Ministers and Amey LG Limited.

SCOTTISH MINISTERS' REQUIREMENTS

SCHEDULE 7 PART 1

MANAGEMENT, INSPECTION AND MAINTENANCE

ANNEX 7.1/B – Trunk Roads Requiring Safety Patrols

SCOTTISH MINISTERS' REQUIREMENTS

SCHEDULE 7 PART 1

MANAGEMENT, INSPECTION AND MAINTENANCE

ANNEX 7.1/B – Trunk Roads Requiring Safety Patrols

Trunk Roads Route

All Trunk Roads.

This is Annex 7.1/C to Schedule 7 Part 1 referred to in the foregoing Agreement between Scottish Ministers and Amey LG Limited.

SCOTTISH MINISTERS' REQUIREMENTS

SCHEDULE 7 PART 1

MANAGEMENT, INSPECTION AND MAINTENANCE

ANNEX 7.1/C – Earthwork Monitoring Requirements

SCOTTISH MINISTERS' REQUIREMENTS

SCHEDULE 7 PART 1

MANAGEMENT, INSPECTION AND MAINTENANCE

ANNEX 7.1/C – Earthwork Monitoring Requirements

None.

This is Annex 7.1/D to Schedule 7 Part 1 referred to in the foregoing Agreement between Scottish Ministers and Amey LG Limited.

SCOTTISH MINISTERS' REQUIREMENTS

SCHEDULE 7 PART 1

MANAGEMENT, INSPECTION AND MAINTENANCE

ANNEX 7.1/D – Flooding Report Sample

SCOTTISH MINISTERS' REQUIREMENTS

SCHEDULE 7 PART 1

MANAGEMENT, INSPECTION AND MAINTENANCE

ANNEX 7.1/D – Flooding Report Sample

Flood report	
RMMS defect ID	**12345-6789**
CCMS OI No. (if applicable)	**OI 55568**
Emergency call Log ref (if applicable)	**890123**
Date: **20 December 2007**	Approx Time of Incident: **16.30**
Route: **A101**	
Link/Section/Chainage: **12345/67 Ch 1234**	
Location: **600m north of junction with A123, northbound carriageway.**	
Grid Ref or Link/Section/Chainage: **123456,123456**	
Description of flood: P**onding over entire northbound carriageway.**	
Cause of flood: **Following heavy rain gullies 3 to 5 became choked with debris**	
Sketch/ Photos: 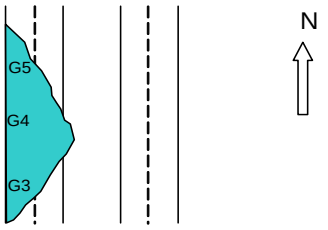 	
Immediate Action Taken: **Flood signs erected on approach. Debris removed by hand.**	
Proposed Action: **Clean out gullies 3 to 5 and remove any further debris from vicinity.**	
Proposed further investigations required: **3rd incident at same location in last 2 years. Carry out more frequency cyclic maintenance.**	
Date of record:	Signed:

This is Annex 7.1/E to Schedule 7 Part 1 referred to in the foregoing Agreement between Scottish Ministers and Amey LG Limited.

SCOTTISH MINISTERS' REQUIREMENTS

SCHEDULE 7 PART 1

MANAGEMENT, INSPECTION AND MAINTENANCE

ANNEX 7.1/E – Procedures for Accessing, Maintaining, Inspecting and Testing of Shared Electrical Assets

SCOTTISH MINISTERS' REQUIREMENTS

SCHEDULE 7 PART 1

MANAGEMENT, INSPECTION AND MAINTENANCE

ANNEX 7.1/E – Procedures for Accessing, Maintaining, Inspecting and Testing of Shared Electrical Assets

1. Access and Isolation of Supply in Shared Electrical Equipment Cabinets

1.1 Where access to shared electrical equipment is required by any of the parties, it shall be undertaken in accordance with the following access procedure.

1.1.1 Access to any shared enclosure shall be only by the use of a standard triangular key. Under no circumstances shall additional locks be added other than to prevent danger. Should such additional locks be fitted, this must be a temporary arrangement and in this situation:

(i) all parties shall be correctly and immediately informed as to the reason,

(ii) agreed emergency attendance procedures to carry out isolation must be in place, and

(iii) warning labels with contact details shall be affixed to the external door of the enclosure.

1.1.2 Should one of the parties sharing the equipment enclosure require access to a shared enclosure to undertake work on a circuit served from that cabinet or pillar, that party shall firstly ensure that the circuit can be isolated for the expected period of the work without any detrimental effect on other parties. Once this has been ascertained, the circuit shall be isolated by the party using a correctly rated isolating device such as an in-circuit switch-disconnector or other suitably rated protective device such as a double-pole miniature circuit breaker. The device chosen shall then be physically locked in the off (open) position using a unique key, held only by the part responsible, in such a way as to prevent inadvertent re-energisation of the isolated circuit.

NOTE: The method of disconnection and prevention of inadvertent re-energisation shall satisfy the requirements of Regulations 12 and 13 of the *Electricity at Work Regulations 1989*. The Health and Safety Executive publication *HSG85 'Safe working Practices'* gives further relevant guidance.

1.1.3 Circuits that are taken out of service under paragraph 1.1.2 shall have a warning label attached to the relevant circuit isolating device indicating 'caution'. At the point of work, further notices shall be displayed adjacent to the isolated circuit. Where adjacent circuits remain energised at the point of work, a 'danger' notice at the point of work shall be displayed on those live circuits. All notices shall clearly state the work being done on the circuit, the person carrying out the work, contact details, telephone number, employing organisation and the like.

1.1.4 Only the circuits isolated and being worked on should be labelled within the cabinet. Where a complete cabinet is isolated, this shall be indicated by means of warning labels attached to both the exterior and interior of the cabinet. Unless isolation is to

prevent immediate danger, full agreement must be obtained by all the sharing parties. All notices shall clearly state the work being done on the circuit, the person carrying out the work, contact details, telephone number, employing organisation and the like.

1.1.5 In the event that the party working on the circuit is unable to complete the work and this results in the continued isolation of a specific circuit or circuits, a laminated message board shall be left in the cabinet or pillar indicating that under no circumstances should these circuits be re-energised without first contacting that party, whose telephone number shall be shown on the message board. Additionally, the party working on the circuit shall inform the contact person of the other party as quickly as possible of the situation and provide an indication of the work required to be undertaken and the likely time for completion.

2. Maintenance, Inspection and Testing of Shared Electrical Equipment

2.1 Responsibility for Maintenance

2.1.1 Where shared electrical equipment is situated outwith the Unit, the local roads authority is responsible for maintenance except where the equipment is located on a road section on which new work by others is in progress or the road section is covered by previous maintenance arrangements arising from such work.

At junctions in remote areas where there is no local roads authority lighting, maintenance of the Trunk Road lighting network shall be extended into the local road by the Operating Company to ensure a safe level of illumination at the junction.

2.2 Inspection

2.2.1 Any of the sharing parties can undertake visual inspections of shared electrical equipment at any time, irrespective of the location of such equipment and without notification. This inspection shall not involve operation of any shared disconnection or protection devices relating other parties' equipment. Under the terms of British Standard 7671, this shall be considered as the non-intervention part of Routine Checks – see British Standard 7671:2008 and associated *Guidance Note 3*.

2.2.2 Where such an inspection identifies defective equipment located within the area of responsibility of the party undertaking the inspection, that party shall undertake any appropriate repairs, having informed the other parties in writing of the nature, extent and timing of such repairs.

2.2.3 Where such an inspection identifies defective equipment located outwith the area of responsibility of the party undertaking the inspection, that party shall inform the responsible party in writing of the nature of the Defect. The party responsible for maintenance of the equipment shall then undertake any appropriate repairs, informing the other parties of the nature, extent and timing of such repairs.

2.3 Testing

2.3.1 Electrical testing as described in Annex C to TD23/99 of the *Design Manual for Roads and Bridges* shall be undertaken jointly by all parties.

The timing of such testing shall follow the existing timetables used by the local authority. The Operating Company shall be responsible for liaising with the local authority regarding the timing of such tests.

SCOTTISH MINISTERS' REQUIREMENTS

SCHEDULE 7 PART 2

WINTER SERVICE

CONTENTS **Page No.**

1.	**WINTER SERVICE GENERAL**	**1**
1.1	General	1
1.2	Winter Service Plan	1
1.3	Monitoring and Reporting	3
1.4	Basic Facility	4
2.	**WINTER SERVICE MANAGEMENT**	**5**
2.1	Equipment and Services	5
2.2	Other Provisions	6
2.3	Winter Service Duty Officers	7
2.4	Decision Making Processes	7
2.5	Winter Service Exercises	8
2.6	Liaison and Communication	8
2.7	Winter Service Patrols	9
2.8	Airwave Communications	10
2.9	Areas Requiring Special Attention	10
2.10	Road Closures	11
2.11	Snow Fences, Shelter Belts and Snow Poles	12
2.12	Salt Bins	12
2.13	Hidden Message Signs	13
2.14	Records	13
3.	**WINTER SERVICE TREATMENTS**	**13**
3.1	Precautionary Treatment	13
3.2	Response Times	15
3.3	Snow and Ice Clearance	15
3.4	Freezing Rain/Rain Falling on Extremely Cold Surfaces	19
4.	**OPERATING COMPANY'S WINTER SERVICE PLANT**	**19**
4.1	General	19
4.2	Front line, Reserve, Additional and Loading Winter Service Plant	21
5.	**DE-ICING MATERIALS**	**23**
5.1	General	23
5.2	Pre-wetted Salt	23
5.3	Alternative De-icing Materials	24
5.4	Abrasive Aggregates	24
5.5	Materials Storage	24

ANNEX 7.2/A – Winter Service Plan **27**

ANNEX 7.2/B – Winter Service Report **35**

ANNEX 7.2/C – Winter Service Patrols **39**

ANNEX 7.2/D – Snow Clearance **43**

ANNEX 7.2/E –Footways (including those on bridge decks), Footbridges and Category A, B, C and D Footways, Footbridges and Cycle Facilities **47**

ANNEX 7.2/F – Location of Known Areas Requiring Special Attention **51**

ANNEX 7.2/G – Location Details **55**

ANNEX 7.2/H – Records **59**

ANNEX 7.2/I – Potassium Acetate Treatment **63**

ANNEX 7.2/J – Appendices for Winter Service Plan **67**

ANNEX 7.2/K – Requirements for De-Icing Material Spread Rates **81**

ANNEX 7.2/L – Salt Stock Monitoring Report **87**

SCOTTISH MINISTERS' REQUIREMENTS

SCHEDULE 7 PART 2

WINTER SERVICE

1. WINTER SERVICE GENERAL

1.1 General

1.1.1 During the Winter Service Period, the Operating Company shall prevent snow or ice from remaining on all Trunk Roads within the Unit in accordance with the requirements of this Part.

1.1.2 The Operating Company shall provide all resources, including depots (except where stated elsewhere in this Contract), materials, labour and Winter Service Plant to meet all winter weather conditions and deliver the level of Winter Service required to fulfil its obligations under this Contract.

1.1.3 The resources identified in Annex 7.2/J of this Part are the minimum provisions and shall not be construed as representing all resources required by the Operating Company to fulfil its obligations for the Winter Service.

1.1.4 The Operating Company shall ensure resources are available to provide and maintain the Winter Service if winter conditions occur outwith the Winter Service Period.

1.1.5 The Operating Company shall identify to the Director circumstances in which it considers it should execute Winter Service Operations as Mutual Aid. The Director will determine whether to issue Orders to provide Mutual Aid in respect of these or any other circumstances.

1.1.6 No later than 30 days prior to the end of Mobilisation Period 2, the Operating Company shall review and, where relevant, amend each of the Annexes of this Part to take account of Network 2 and shall submit the amended Annexes of this Part to the Director for his prior written consent.

1.2 Winter Service Plan

1.2.1 The Winter Service Plan shall comprise the Operating Company's proposals and approach for delivering the Winter Service in any Winter Service Period to meet the requirements of this Contract.

1.2.2 The Winter Service Plan shall comply with the requirements of Transport Scotland's *Manual for the Management of the Risk of Unplanned Network Disruption* and be included within the Operating Company's Disruption Risk Management Plan as stated in Schedule 7 Part 3.

1.2.3 The Operating Company shall prepare the Winter Service Plan in accordance with the structure in Annex 7.2/A of this Part and include the details required by Annex 7.2/J of this Part.

1.2.4 The Operating Company shall also include the following details in the Winter Service Plan as a minimum:

(i) liaison arrangements to ensure the coordination of Winter Service Operations at the boundaries of the Unit,

(ii) Mutual Aid arrangements with other operating companies or local authorities,

(iii) its response times for mobilising Winter Service Plant and such other resources as shall be required to meet the requirements of this Part,

(iv) rosters detailing the availability of all Operating Company staff required to provide the Winter Service throughout the Winter Service Period. The rosters shall include names, addresses and telephone numbers of the staff listed,

(v) proposed arrangements for safe clearing of all roads within the Unit when they are covered in snow or ice,

(vi) proposed arrangements for safe clearing of the Principal Crossings within the Unit when they are covered in snow or ice,

(vii) proposed arrangements for dealing with freezing rain/rain falling on extremely cold surfaces,

(viii) the type, location and procedures for the operation of snow gates in each Winter Service Plan,

(ix) the arrangements for re-opening roads and the Principal Crossings and snow gates within the Winter Service Plan,

(x) processes and procedures for deciding when it is unsafe to continue with, or commence, clearing Operations,

(xi) arrangements for dealing with vulnerable gradient locations and other areas requiring special attention, and

(xii) arrangements for controlling access to key routes in severe conditions.

1.2.5 When preparing the Winter Service Plan, the Operating Company shall consult the Emergency Services, adjacent local authorities and their agents, other operating companies and other interested parties.

1.2.6 Not later than 30 days prior to the end of Mobilisation Period 1, the Operating Company shall prepare and submit to the Director for his written consent, the Winter Service Plan for Network 1 for the period between Commencement of Service Date 1 and midnight on 15 May that first follows Commencement of Service Date 1 in the event that Commencement of Service Date 1 falls between 31 August and 15 May.

1.2.7 Prior to 31 July of each Annual Period, the Operating Company shall prepare and submit to the Director for written consent the Winter Service Plan for the forthcoming Winter Service Period. The Operating Company shall update the Winter Service Plan to take account of Network 2 no later than 30 days prior to the end of Mobilisation Period 2 and shall submit the updated Winter Service Plan to the Director for his written consent.

1.2.8 Once consented to by the Director, the Winter Service Plan shall be incorporated into the Management System.

1.2.9 The Operating Company shall ensure the Winter Service Plan is kept under review prior to and during the Winter Service Period. The Operating Company shall submit any amendments to the Winter Service Plan to the Director for his prior written

consent. When consented to, the amended Winter Service Plan shall be incorporated into the Management System.

1.2.10 Prior to the commencement of each Winter Service Period, the Operating Company shall provide one Electronic Copy of each approved Winter Service Plan to:

(i) the Director,

(ii) the Performance Audit Group,

(iii) the Emergency Services,

(iv) adjacent local authorities and their agents, and

(v) other operating companies.

1.3 Monitoring and Reporting

1.3.1 The Operating Company shall support the Director in the operation of the Scottish Salt Group as required. For the purposes of this Part, the "Scottish Salt Group" includes representatives from the Society of Local Authority Chief Executives (SOLACE), the Society of Chief Officers of Transportation in Scotland (SCOTS), Convention of Scottish Local Authorities (COSLA) and Transport Scotland. Its function is to monitor local authority and Trunk Road operator's salt returns, identify pressure points, arrange Mutual Aid, input to the United Kingdom Salt Cell, liaise with salt suppliers, provide salt conservation guidance, identify alternative salt suppliers and identify alternative de-icers.

1.3.2 The Operating Company shall provide the Director when requested with daily or weekly salt stock monitoring reports. Monthly salt stock monitoring reports shall be produced and submitted to the Director on the first Working Day of each month during the Winter Service Period.

Such reports shall detail salt stocks held, supply arrangement within the Unit, salt usage and include a position statement on salt stocks, actual and imminent salt orders and a forecast of forward usage. The salt stock monitoring report shall be in accordance with the structure shown in Annex 7.2/L of this Part.

1.3.3 No later than 31 May in each Annual Period, the Operating Company shall prepare a Winter Service Report on the Winter Service Plan and Winter Service Operations for the previous Winter Service Period, for review by the Director and the Performance Audit Group. The Winter Service Report shall help to inform the Director and the Operating Company about the improvements required for the next Winter Service Plan. The Winter Service Report shall be in accordance with the structure shown in Annex 7.2/B of this Part.

1.3.4 Prior to 31 May of the first Annual Period, the Operating Company shall prepare a Winter Service Report and submit it to the Director for the portion of the Winter Service Period ending 15 May in the first Annual Period.

1.3.5 To assist in the preparation of this Winter Service Report, prior to Commencement of Service Date 1 the Director will provide the Operating Company with the Winter Service Plan prepared by the previous operating company for any part of the Unit and details of the Winter Service provided by it and any other historic information.

1.3.6 An annual review meeting between the Operating Company and the Director shall take place 10 Working Days after each annual Winter Service Report has been submitted to the Director, to consider the findings.

1.3.7 During the Winter Service Period, the Operating Company shall produce daily reports on planned treatments for the following 24 hour period and actual treatments for the previous 24 hour period for each precautionary treatment Route and each Winter Service Patrol route.

These reports shall be recorded in an electronic format and shall include as a minimum:

(i) summary forecast and actual weather data,

(ii) planned and actual spread rates,

(iii) planned and actual commencement times,

(iv) completion times,

(v) amount of de-icing material spread and the cumulative amount spread by weight during the relevant Winter Service Period,

(vi) plough usage,

(vii) number of treatment days (capability) of each de-icing material available for each depot based on six treatments per Route per day at 20 grammes per square metre for pre wetted salt and six treatments per Route per day at 0.0156 litres per square metres for potassium acetate,

(viii) the weather forecast accuracy, and

(ix) any other relevant information.

1.3.8 In addition to the provisions of 1.3.7, the Operating Company shall upload its daily report on planned treatments for the following 24 hour period onto the Traffic Scotland Service website by 15:00 hours each day during the Winter Service Period.

1.3.9 For each operative, a log of hours spent on "call out" or "standby" shall be kept in accordance with the documented procedures in the Management System.

1.4 Basic Facility

1.4.1 Operatives of Winter Service Plant shall hold at all times up to date recognised qualifications and shall have the skills and experience to operate such Plant safely.

1.4.2 The Operating Company shall ensure that sufficient operatives shall be available at all times to provide the Winter Service Operations and to meet the required response times.

1.4.3 The Operating Company shall ensure that, throughout each Winter Service Period, sufficient trained operatives are available for each item of front line and reserve Winter Service Plant and each item of loading Winter Service Plant such that up to 24 hours per day working can be carried out.

1.4.4 The Operating Company shall ensure that, throughout the Winter Service Period, sufficient resources are available to minimise disruption to Winter Service Operations caused by breakdown or any other similar circumstance and that Winter Service Operations are not delayed.

1.4.5 The Operating Company shall arrange for any necessary repairs to the front line Winter Service Plant to be carried out without delay unless such repair compromises delivery of the Winter Service, in which case the Operating Company shall mobilise the reserve Winter Service Plant to meet the required response times. The Operating Company shall ensure that repairs are carried out to the front line vehicles without delay while the reserve fleet is operational.

1.4.6 A system that allows spoken communication with other Winter Service Plant operatives and the Winter Service Duty Officers shall be fitted in all Winter Service Plant. Such system shall be effective at all times and within all parts of the Unit including the location of each of the Winter Service Duty Officers.

1.4.7 Prior to 1 October in each Annual Period, the Operating Company shall:

(i) drive the whole length of each precautionary treatment route in the Winter Service Plant to be used for the precautionary treatment of such route at speeds not exceeding those required for such precautionary treatment, and

(ii) fit and remove the plough to all Winter Service Plant so equipped,

in order to ensure its operatives are familiar with the route and plant to be used.

1.4.8 Records of the requirements of paragraph 1.4.7 including as a minimum details of:

(i) time taken from depot to start of treatment route,

(ii) time taken to travel the route,

(iii) time taken to travel the treated route,

(iv) time taken to fit the plough,

(v) any problems encountered and actions taken to resolve them,

(vi) proposed longer term solutions to prevent recurrence of such problems, and

(vii) any other relevant information,

shall be held electronically by the Operating Company in accordance with the documented procedures in the Management System.

2. WINTER SERVICE MANAGEMENT

2.1 Equipment and Services

2.1.1 The Operating Company shall provide the following to assist with its decision making process:

(i) an expert weather forecasting service,

(ii) a computerised road weather information system (the "Computerised Road Weather Information System") which includes hardware, software and telecommunication links required to obtain, interpret and display as a minimum:

(a) road sensor data (forecast and actual),

(b) weather data,

(c) weather camera images,

(d) frontline Winter Service Plant sensor data (air, road surface temperature and spreading rates) in real time,

(e) audible warnings and alarms for winter duty staff, and

(f) other relevant information,

in a manner that predicts trends in weather and road conditions.

2.1.2 The Computerised Road Weather Information System shall be accessible to the expert weather forecasting service provider and shall be able to accept road sensors, mobile road sensors, alarms and action logs additional to those listed in Annex 7.2/G of this Part.

The Operating Company shall be responsible for the provision of everything within the Computerised Road Weather Information System with the exception of road sensors and weather cameras. No later than 30 days prior to the end of Mobilisation Period 1, the Operating Company shall submit its proposed Computerised Road Weather Information System to the Director for his written consent. No later than 30 days prior to the end of Mobilisation Period 2, the Operating Company shall amend the Computerised Road Weather Information System to take account of Network 2 and shall submit its proposed amendments to the Director for his written consent. If in either case, consent is not given, the Operating Company shall submit a revised Computerised Road Weather Information System for approval within 10 Working Days of consent being refused.

2.1.3 The Computerised Road Weather Information System shall have suitable computer terminals and software for the display of weather related radar information from the expert weather forecasting service provider. Such information shall be accessible to the Operating Company at all times during the Winter Service Period to assist in the Winter Service decision making process.

2.1.4 The Operating Company shall provide the Director with real time access to the Computerised Road Weather Information System and arrange for access to the expert weather forecaster's website to allow remote monitoring of proposed daily actions.

2.2 Other Provisions

2.2.1 The Operating Company shall provide and maintain all telecommunication links to meet the requirements of this Part.

2.2.2 All road sensors and weather prediction equipment shall use an open protocol based upon the Department for Transport *TR2020C* protocol.

Updated protocols may be used, but only where open access of the protocol is available to the Director to enable access to such protocol to other providers of equipment or service.

For new and replacement weather stations, open protocol shall be provided at outstation level to ensure full functionality is available to other providers of equipment or service.

2.2.3 To obtain regular updates of road conditions, road sensors shall be polled by the Operating Company at intervals of 20 minutes between 1 October and 15 May and hourly at all other times.

2.2.4 The Operating Company shall ensure that all cameras are operational throughout each Annual Period and as a minimum weather camera images shall be updated every 10 minutes. These images shall be delivered to the Traffic Scotland Service website in a format agreed with the Director.

2.2.5 The Operating Company shall hold welfare kits and shall distribute these in the event of a Critical Incident which involves stranded vehicles. The welfare kits shall be carried by each Winter Service Plant and shall as minimum include 24 space blankets, 24 bottles of water and 24 energy bars.

2.3 Winter Service Duty Officers

2.3.1 The Winter Service Duty Officers shall be authorised by the Operating Company to take decisions and to issue instructions on behalf of the Operating Company for implementing and directing the Winter Service and shall take such decisions and issue such instructions as are required. The Winter Service Duty Officers shall be on duty in the control room whenever Winter Service Operations are planned and or in operation. The Winter Service Duty Officers shall keep all Records relating to each decision made.

2.4 Decision Making Processes

2.4.1 The Director will provide, where available, to the Operating Company road sensor data for Network 1 during Mobilisation Period 1 and for Network 2 during Mobilisation Period 2.

2.4.2 During the Winter Service Period, the Operating Company shall monitor and interpret:

(i) weather forecasts,

(ii) Trunk Road conditions,

(iii) data from fixed and mobile road sensors,

(iv) the Computerised Road Weather Information System, and

(v) weather station and Traffic Scotland closed circuit television cameras

to ensure that the Winter Service Duty Officers receive and monitor climatic and road information to assist in the decision making process and in taking appropriate actions.

2.4.3 When snow or ice is forecast, action shall be taken by the Operating Company to keep the roads within the Unit in safe condition based on the Winter Service Plan.

2.4.4 Following any precautionary treatment undertaken by the Operating Company, the Winter Service Duty Officers shall continue to monitor the weather forecasts and the actual weather conditions, including reports from Winter Service Patrols and data from the Computerised Road Weather Information System, to determine the ongoing effectiveness of the treatment and to instruct further treatment when this shall be required.

This shall be particularly important in situations where:

(i) precipitation is forecast or has occurred that may reduce the effectiveness of a treatment, or

(ii) the trend data from the Computerised Road Weather Information System changes from that predicted, or

(iii) on exposed bridge decks where temperatures can be lower than adjoining roads.

Where the information available to the Winter Service Duty Officers requires a review of the ongoing effectiveness of any precautionary treatment that has been undertaken, in terms of the ability of residual levels of de-icing material remaining on any pavement surface to deal with forecast or actual weather conditions, the Winter Service Duty Officers shall arrange for further precautionary treatment to be carried out.

2.5 Winter Service Exercises

2.5.1 The Operating Company shall carry out Winter Service "snow desk" exercises prior to 1 November in each Winter Service Period. Such exercises shall be based on scenarios provided by the Director and shall serve to test the effectiveness of the Operating Company's proposed Winter Service personnel.

2.5.2 The Operating Company shall assess the performance of its proposed Winter Service personnel and such shall also be assessed by the Director and the Performance Audit Group. In the event that such performance is deemed unsatisfactory by any party, the Operating Company shall be required to take remedial action to improve demonstrably the effectiveness of the Winter Service personnel.

2.6 Liaison and Communication

2.6.1 During the Winter Service Period, the Operating Company shall report the known effects of adverse weather conditions to the Traffic Scotland Operations and Infrastructure Services Contractor. The Operating Company shall liaise closely with:

(i) Transport Scotland,

(ii) the Police,

(iii) the Traffic Scotland Operations and Infrastructure Services Contractor,

(iv) adjacent local road and road authorities, and

(v) adjacent Trunk Road operators,

to monitor adverse winter weather and travelling conditions and ensure that the Winter Service Plan for provision of Winter Service at boundary interfaces is implemented.

2.6.2 When Winter Service Operations are planned, the Operating Company shall notify electronically the organisations referred to in paragraph 2.6.1 of this Part, to inform them of such Operations and, when appropriate, to request that messages be displayed on all relevant electronic warning systems and variable message signs.

2.6.3 The police may supply information to the media regarding Trunk Road travelling conditions during periods of Severe Weather.

2.7 Winter Service Patrols

2.7.1 From 1 November to 31 March inclusive, the Operating Company shall carry out Winter Service Patrols on those sections of Trunk Roads identified in Annex 7.2/C of this Part.

2.7.2 Category A and Category B Winter Service Patrols are identified in Annex 7.2/C of this Part.

2.7.3 All Winter Service Patrol vehicles shall comprise a pre-wet spreader with a minimum capacity of six cubic metres and with full functionality that meets the requirements of the Specification.

2.7.4 When the road surface temperature for any climatic area within a Winter Service Patrol route is forecast at any time within the period 02.00 to 10.00 hours to be less than, or equal to, three degrees centigrade, a Winter Service Patrol shall be enacted in accordance with the requirements of paragraph 2.7.10 and paragraph 2.7.11.

2.7.5 Winter Service Patrols shall:

(i) patrol all carriageways of Trunk Roads within the Unit, excluding slip roads,

(ii) report on road conditions encountered to, and take instruction on treatments from, the Winter Service Duty Officers,

(iii) provide an immediate response when instructed to carry out treatments or other de-icing Operations by the Winter Service Duty Officers,

(iv) deal with any situation on the Winter Service Patrol route requiring immediate attention,

(v) pay particular attention to the areas identified in Annex 7.2/F of this Part,

(vi) undertake short stops for minor maintenance such as clearing grips and removing debris, and

(vii) provide daily reports in the format indicated in Table 7.2.J.3 of Appendix WSP1 to Annex 7.2/J of this Part.

Where any situation on the Winter Service Patrol route cannot be resolved by any of the actions described in this paragraph, the Operating Company shall deploy additional resources to resolve the situation. Where any Incident occurs within the Unit, but outwith the Winter Service Patrol route, the Operating Company shall deploy additional resources to manage the Incident.

2.7.6 When, during a Winter Service Patrol, ice is found to have formed on a major Structure, the Operating Company shall use potassium acetate as a spot treatment.

2.7.7 The Operating Company shall monitor the operation of Winter Service Patrols and take any action necessary to ensure that they comply with the requirements of this Part.

2.7.8 Winter Service Plant for Winter Service Patrols shall be fully loaded with de-icing material at the commencement of the Winter Service Patrol.

2.7.9 Category A Winter Service Patrols shall operate from 02:00hrs to 10:00hrs at two hourly intervals as described in paragraph 2.7.10 of this Part when during this period the road surface temperature for any climatic domain within a Winter Service Patrol route is forecast at any time to be less than, or equal to three degrees centigrade. A

minimum of two Winter Service Patrol routes shall be designed such that each Winter Service Patrol alternates between a one hour patrol and a one hour standby on each Winter Service Patrol route. All Winter Service Patrol routes shall be designed such that patrols are completed within one hour of commencement allowing for typical morning peak traffic flows.

Winter Service Patrol routes for motorways, dual carriageways and other connecting roads shall be further designed so that the Winter Service Patrol vehicle, when working, is able to attend any location on its route within 30 minutes of receiving a call from any of the Winter Service Duty Officers.

2.7.10 Operating periods for Category A Winter Service Patrols shall be between 02:00hrs and 04:00hrs, 04:00hrs and 06:00hrs, 06:00hrs and 08:00hrs and 08:00hrs and 10:00hrs. The Winter Service Patrol route must be covered in the same direction in each period.

2.7.11 Category B Winter Service Patrols shall operate from 00:00hrs to 09:00hrs at three hourly intervals. Operating periods for Category B Winter Service Patrols shall be between 00:00hrs and 03:00hrs, 03:00hrs and 06:00hrs and 06:00hrs and 09:00hrs. The Winter Service Patrol Route must be covered in the same direction in each period.

2.7.12 Winter Service Patrols shall allow for rest periods, patrolling both sides of dual carriageways and motorways and all actions required in accordance with paragraph 2.7.5 of this Part.

2.7.13 Winter Service Plant for Winter Service Patrols shall not be used by the Operating Company for undertaking precautionary treatments.

2.7.14 Winter Service Plant for Winter Service Patrols shall be used by the Operating Company for the clearance of snow or ice where or when such usage does not conflict with its primary function, or when the extent of the snowfall requires it to be used for snow clearing on the Winter Service Patrol route.

2.7.15 Category A Winter Service Patrols shall operate outwith the times specified in paragraph 2.7.9 when forecasts indicate snow and ice conditions causing an increased risk of delays and disruption to road users.

2.8 Airwave Communications

2.8.1 Category A and Category B Winter Service Patrols shall use Airwave in accordance with Schedule 7 Part 3. The Operating Company shall utilise this equipment as a dedicated communication system between Winter Service Patrol personnel, the Traffic Scotland National Control Centre, the Winter Service Duty Officers and the police.

2.9 Areas Requiring Special Attention

2.9.1 Areas requiring special attention are areas where frost or ice is prone to occur, where water run-off is likely to happen or where the gradient is likely to affect the traction of vehicles.

2.9.2 The Operating Company shall review the areas requiring special attention referred to in Annex 7.2/F of this Part at least once in each Annual Period and amend the list as it considers necessary.

2.10 Road Closures

2.10.1 The police are responsible for taking decisions to close roads during periods of adverse weather or adverse road conditions.

When the police, in consultation with the Operating Company, consider that the road is unsafe for vehicular traffic, the Operating Company shall arrange with the Police to close the road(s) and, if applicable, snow gates listed in Annex 7.2/G of this Part as considered necessary following such consultation.

2.10.2 The Operating Company shall liaise with the Police to establish and carry out procedures for the operation of snow gates, including checking that no vehicles or pedestrians are trapped on sections of Trunk Road between closed snow gates. The procedures shall include:

(i) manning the gates until a Police search of the road between the gates has been undertaken,

(ii) securing the gates, having ascertained that no-one has been trapped between them,

(iii) withdrawing all Operating Company personnel except those involved in the clearance of snow, and

(iv) agreeing the method of securing snow gates.

The Operating Company shall discuss and agree with the Police a standard type of padlock and suitable number of keys for the snow gates within the Unit. The Operating Company shall also agree with the Police on the number of keys to be held by each organisation. Two of the Operating Company's keys shall be held at the depot nearest to each snow gate. The Winter Service Duty Officer shall ensure that the keys are kept safely at all times and that they are returned to the depot in the event that they are taken out by the Operating Company in the course of its Winter Service Operations.

The Operating Company shall include the type, location and procedures for the operation of snow gates in each Winter Service Plan.

The Operating Company shall advise the police when it considers that the road can be re-opened safely and shall arrange with the police to re-open the road. The Operating Company shall document the arrangements for re-opening roads and snow gates within the Winter Service Plan.

2.10.3 When a snow gate is intended to be closed, the Operating Company shall immediately notify the Traffic Scotland Operations and Infrastructure Services Contractor by telephone.

2.10.4 The Operating Company shall provide regular updates to the Traffic Scotland Operations and Infrastructure Services Contractor by telephone and e-mail of progress on clearing the closed section of road and the expected and actual time of re-opening.

2.10.5 The Operating Company shall immediately notify the Traffic Scotland Operations and Infrastructure Services Contractor by telephone following a Critical Incident which has caused or will cause significant disruption to traffic flow.

2.10.6 The Operating Company shall comply with the requirements of Schedule 7 Part 3 regarding notification of Critical Incidents.

2.10.7 A written report shall be submitted to the Director by email within 12 hours of snow gates being closed due to snow or other adverse weather, giving details of:

(i) the reason for closing the gates,

(ii) the time that the gates were closed,

(iii) the time that the gates were re-opened or are likely to be re-opened,

(iv) any action to be taken prior to re-opening the gates,

(v) stranded motorists, if any, and any other relevant information.

2.10.8 Following the closure of snow gates, snow clearing Operations shall continue on the section of Trunk Road between the gates as weather conditions permit, to allow the earliest possible re-opening of the Trunk Road.

2.10.9 The Operating Company shall inspect snow gates annually prior to the commencement of the Winter Service Period and shall, subject to an Order, undertake Operations to ensure they are functional and of effective appearance throughout the Winter Service Period.

2.11 Snow Fences, Shelter Belts and Snow Poles

2.11.1 The locations of existing snow fences and snow poles are provided in Annex 7.2/G of this Part.

2.11.2 During the first Annual Period, the Operating Company shall review the need for snow fences, shelter belts and snow poles on the Unit and, where it considers that alterations to existing provisions are necessary, the Operating Company shall make recommendations in writing for the Director's consent.

2.11.3 The Operating Company's recommendations for erection of additional snow fences and creation of shelter belts erection of additional snow poles shall be included in each Winter Service Report.

2.11.4 Subject to an Order, the Operating Company shall Design and erect snow fences in accordance with the recommendations set out in Transport and Road Research Laboratory *Report LR 362 Snow Fences* by L E Hogbin dated January 1970, unless otherwise consented to in writing by the Director.

2.11.5 Subject to an Order, the Operating Company shall supply and erect snow poles. The Operating Company shall inspect snow fences and snow poles annually prior to the commencement of the Winter Service Period and shall, subject to an Order, undertake Operations to ensure they are functional and of effective appearance throughout the Winter Service Period.

2.12 Salt Bins

2.12.1 During Mobilisation Period 1, the Operating Company shall review the current locations of salt bins in the Unit and shall make proposals for the Director’s consent. The Operating Company shall keep the need for salt bins under review and shall consider provision of additional locations to improve the Winter Service. It shall make appropriate recommendations in each Winter Service Report.

2.12.2 By 30 September in each Annual Period, salt bins shall be provided and placed by the Operating Company at the locations identified in Annex 7.2/G of this Part. Throughout the Winter Service Period the Operating Company shall:

(i) replenish the salt bins with salt to ensure that a sufficient supply is always available for public use,

(ii) replace damaged, vandalised or missing salt bins within 48 hours of the damage, vandalism or absence becoming known by the Operating Company, and

(iii) at the end of each Winter Service Period, collect and take all salt bins to the Operating Company's depots for storage.

Before storage, the Operating Company shall empty and wash the salt bins and grease their hinges.

2.13 Hidden Message Signs

2.13.1 Hidden message signs are provided at the locations referred to in Annex 7.2/G of this Part.

2.13.2 The Operating Company shall open, or erect and open, snow or ice hidden message signs before the start of each Winter Service Period, or as conditions require, to provide information for weather and road conditions during the Winter Service Period.

2.13.3 The Operating Company shall liaise with the Police to coordinate the activation of relevant signs when closing roads.

2.14 Records

2.14.1 The Operating Company shall complete and keep daily Records for Winter Service requirements as referred to in Annex 7.2/H of this Part. The Records shall be held electronically and have a remote access facility available to both the Director and the Performance Audit Group. The format of these Records shall be in accordance with the documented procedure in the Management System as it relates to the Winter Service. Data transmitted from the Winter Service Plant shall be received and stored in accordance with clause 2804AR of the Specification.

3. WINTER SERVICE TREATMENTS

3.1 Precautionary Treatment

3.1.1 The Operating Company shall undertake such precautionary treatment as is required.

3.1.2 The Winter Service Duty Officers shall instruct the commencement time and the spread rates for precautionary treatment Operations.

3.1.3 The total width of carriageway areas including:

(i) slip roads,

(ii) hardshoulders,

(iii) hard strips,

(iv) turning Lanes,

(v) central reserve crossovers,

(vi) contiguous lay-bys,

(vii) bus bays,

(viii) car parks,

(ix) cycle lanes, and

(x) hatched areas,

shall receive precautionary treatments.

3.1.4 The Operating Company shall ensure that precautionary treatments for carriageways with negative texture surfaces shall be applied as close as is practical to the time road surface temperatures are forecast to be at less than, or equal to, plus one degree centigrade.

3.1.5 The Operating Company shall provide precautionary treatment for carriageways in the Unit when road surface temperatures fall, or are forecast to fall, to less than, or equal to, plus one degree centigrade or when snow conditions are forecast.

3.1.6 During precautionary treatments, all Winter Service Plant shall be driven in a manner appropriate to the prevailing weather conditions, and within the speed limit, but not exceeding 40 miles per hour.

3.1.7 On single carriageways, de-icing material shall be spread across the full width of the carriageway in a single pass.

3.1.8 A spreading vehicle shall not be used to treat a carriageway of more than three Lanes in a single pass. If the width of carriageway to receive de-icing treatment is greater than three Lanes, de-icing treatment shall be carried out either with two passes of the spreading vehicle or by the use of a second spreading vehicle. The hardshoulder is a Lane.

Spread patterns shall be adjusted to suit the carriageway width and the Lane in which the spreading vehicle is travelling.

3.1.9 Roads with temporary traffic management, including contra-flow running, may require the Operating Company to amend a treatment route.

Particular care shall be taken by the Operating Company to ensure that all Lanes and contra-flow crossovers are adequately treated with de-icing material prior to removal of temporary traffic management and reopening to traffic.

3.1.10 Potassium acetate shall be applied at the locations specified in Annex 7.2/I of this Part.

3.1.11 The Operating Company shall monitor and manage variable road and weather conditions that may occur after precautionary treatments have been completed.

3.1.12 Precautionary treatment routes shall be designed to enable completion of treatment routes within two hours of commencement of the treatment in a single pass, except where the requirements detailed in paragraph 3.1.9 of this Part apply.

3.1.13 Precautionary treatments shall be carried out on Category A, B and C footways (including those on bridge decks), footbridges and cycling facilities at locations identified in Annex 7.2/E of this Part when road surface temperatures are forecast to

fall to less than, or equal to, plus one degree centigrade or when snow conditions are expected.

3.1.14 Precautionary treatment for Category A, B and C footways (including those on bridge decks), footbridges and cycling facilities shall be carried out as a separate Operation from carriageway precautionary treatments, utilising equipment suitable for the purpose.

3.1.15 The minimum spread rate for anti-icing materials for precautionary treatments to footways (including as a minimum those on bridge decks), footbridges, cycling facilities and service roads on bridges shall be 20 millilitres per square metre of brine with a minimum concentration of 20 percent. Actual treatment levels shall be discussed and agreed with the relevant local authorities.

3.1.16 The total width of Category A, B and C footways (including as a minimum those on bridge decks), footbridges, cycling facilities and service roads on bridges shall be treated.

3.1.17 The Operating Company shall use pre-wetted salt in accordance with the Specification for precautionary de-icing treatments on all carriageway treatment routes in the Unit. Details of the Operating Company's proposals for such use shall be provided as shown in Table 7.2.J.4 of Appendix WSP2 to Annex 7.2/J of this Part and in each Winter Service Plan.

The Operating Company may, within the Winter Service Plan, propose the use of dry salt in accordance with the requirements of Table 7.2.K.2 of this Part to enable the effective de-icing of carriageway and footway treatment routes during certain weather conditions.

3.2 Response Times

3.2.1 Notwithstanding the requirements of paragraph 2.7 of this Part, when an immediate response is required for snow or ice clearance or other de-icing Operations, the Operating Company shall mobilise and commence its treatment within one hour of the relevant Winter Service Duty Officers' decision.

3.2.2 When a planned response is required for precautionary treatment, the Operating Company shall mobilise and commence precautionary treatments to ensure completion before snow or ice conditions are predicted to occur, as indicated by the expert weather forecasting service.

3.2.3 For immediate or planned responses, the Operating Company shall complete treatment within two hours from the commencement of the treatment. Where normal access is prevented due to weather related or other Incidents, the Operating Company shall mobilise within one hour of becoming aware of the Incident and shall complete the precautionary treatment within three hours.

3.2.4 Category D footways, footbridges and cycleways are those not listed as being in Category A, B or C and shall receive treatment when required by the Director. The Operating Company shall identify Category D facilities in each Winter Service Plan.

3.3 Snow and Ice Clearance

3.3.1 Design of the ploughing routes shall be in accordance with the requirements of Annex 7.2/D of this Part.

3.3.2 The Operating Company shall provide details in its Winter Service Plan of its ploughing Routes in the form shown in Table 7.2.J.5 of Appendix WSP2 to Annex 7.2/J of this Part.

3.3.3 Spreading of de-icing materials during ploughing of carriageway areas shall be at the rate of spread instructed by the Winter Service Duty Officers.

3.3.4 The plough blade shall be set as close to the road surface as is consistent with the removal of the maximum amount of snow. The Operating Company shall ensure that the design of the plough blade allows for such use while preventing damage to the road surface, other equipment on the road surface and the plough blade.

3.3.5 The total width of carriageway as described in paragraph 3.1.3 of this Part shall be cleared of snow or ice.

3.3.6 In the event that treatment is required to lay-bys and car parks that are remote from the carriageway, this shall be undertaken after all other parts of the network are operating satisfactorily and resources can be deployed to these locations.

3.3.7 When planning and carrying out snow or ice clearance, the Operating Company shall pay particular attention to the layout of the carriageway in terms of the overall number of Lanes and the location of entrance and exit slip Lanes.

Snow or ice clearance of slip roads shall be coordinated with main carriageway clearance.

A clear path shall be kept open between those entry and exit points where frequent Lane changes are necessary.

3.3.8 On dual carriageway and multi-Lane motorway Trunk Roads including bridge decks:

(i) the Operating Company shall use echelon ploughing to clear the carriageway when required,

(ii) echelon ploughing shall be undertaken by two or more vehicles, a minimum of one of which shall be front line Winter Service Plant, all moving in the same direction, one behind each other, on adjacent Lanes,

(iii) only the right hand Lane may be ploughed towards the central reservation,

(iv) the Operating Company shall avoid irregular windrows caused by ploughing passes, especially those which weave from one Lane to another,,

(v) Lanes shall be completely cleared and the windrows of snow remaining shall form a smooth and continuous line without sudden encroachments into the cleared path,

(vi) Prior to removal, all windrows on the Principle Crossings shall be regularly monitored and maintained in a state that prevents a hazard to traffic,

(vii) windrows may be temporarily left on hard shoulders but these shall be cleared as soon as road surface conditions on running Lanes are safe, and

(viii) clearance work shall proceed continuously until no snow remains on the carriageway.

During and after prolonged falls of snow, ploughing shall be used continuously from the onset of snow to prevent snow build up and compaction by traffic and to ensure the snow clearance of all roads within Unit.

Such ploughing shall be supplemented by simultaneous de-icing treatment at a minimum spread rate of 20 grammes per square metre. For bridge decks potassium acetate shall be used at the spread rate in accordance with Table 7.2.K.3 in Annex 7.2/K of this Part.

3.3.9 If the road surface temperature continues to fall and the need for ploughing continues, or hard packed snow or ice has formed, the spread rate shall be increased as necessary to a maximum rate of 40 grammes per square metre in accordance with the requirements in Table 7.2.K.2 of Annex 7.2/K of this Part. Treatment of bridge decks will be accordance with the requirements in Table 7.2.K.3 of Annex 7.2/K of this Part.

3.3.10 Where conventional ploughing is not possible, for example:

(i) in exceptional circumstances when the snow on the road is deep and cannot be removed,

(ii) when de-icing treatment over packed snow is likely to provide an unacceptable surface,

(iii) when the traffic is insufficient to disperse the snow,

(iv) through certain traffic management conditions, or

(v) on bridge decks and bridge footways/service roads,

the Operating Company shall carry out Operations to lift, remove and dispose of snow or ice, or utilise snow blowers with the snow being directed onto trucks on bridge decks or onto adjacent land where the Operating Company has obtained the prior agreement of the landowner and the Scottish Environmental Protection Agency.

Such Operations shall be followed by de-icing treatment.

3.3.11 Where there is a formation of hard packed snow or ice not exceeding 20 millimetres thickness and the air temperature is above minus five degrees centigrade, removal shall be achieved by using successive spreading of de-icing material in accordance with Table 7.2.K.2 in Annex 7.2/K of this Part. Consideration shall be given to alternative de-icing materials in accordance with paragraph 5.4.1 of this Part.

The Scottish Ministers own two icebreakers (Raiko K14 model). These shall be shared by the Operating Company with the other operating companies on other parts of the Trunk Road network on a priority basis as determined by the Scottish Ministers. The Operating Company shall make all necessary arrangements with the other operating companies on other parts of the Trunk Road network for the safe storage and sharing of this equipment. The Operating Company shall ensure that front line Winter Service Plant includes two vehicles capable of being fitted with and operating either icebreaker in accordance with the manufacturer's recommendations.

3.3.12 Where there is a formation of hard packed snow or ice:

(i) not exceeding 20 millimetres thickness and air temperature is less than, or equal to, minus five degrees centigrade, or

(ii) exceeding 20 millimetres thickness,

the addition of abrasive aggregates shall be considered in accordance with paragraph 5.5 of this Part. Application of the initial treatment technique should be resumed as soon as possible since abrasives contribute little to the removal of snow or ice and may block drains and gullies upon thawing. Abrasives shall not be used on Structures where there is any danger of blockage to drains.

Abrasive aggregates may be used by the Operating Company as a supplement in urban areas where de-icing material alone would provide an unacceptably slippery surface.

3.3.13 Footways (including those on bridge decks), footbridges and cycleway categories and the response times and clearance requirements for each category are provided in Tables 7.2.E.1 and 7.2.E.2 in Annex 7.2/E of this Part. Table 7.2.E.3 provides details of such Structures within the Unit. The Operating Company shall ensure Table 7.2.E.3 is kept up to date until Service End Date and shall make written proposals for the inclusion and treatment of additional footways, footbridges and cycleways for the Director's consent.

3.3.14 Following clearance of snow or ice from footways (including those on bridge decks), footbridges and cycling facilities, de-icing material shall be spread in accordance with paragraph 3.1.17. Where snow or ice remains on footways (including those on bridge decks), footbridges and cycling facilities after treatment, de-icing material shall be spread at a minimum spread rate of 20 grammes per square metre, or as specified in Table 7.2.K.2 of Annex 7.2/K of this Part as appropriate, to prevent ice formation on the cleared surfaces.

The full width of the footways (including those on bridge decks), footbridges and cycling facilities shall be treated.

3.3.15 The Operating Company shall, in discussion with Network Rail or any successor organisation, ensure that appropriate safety precautions are taken when snow ploughing vehicles are negotiating railway level crossings.

When snowploughing or snow blowing Operations are undertaken, the Operating Company shall ensure that snow or ice does not build up across or against:

(i) railway tracks,

(ii) gates,

(iii) bridge parapets,

(iv) fences,

(v) walls, and

(vi) other boundaries.

Where snow or ice clearance is carried out adjacent to railway overhead electricity cables, the Operating Company shall take special care to ensure snow does not cause electrical short circuits or other damage.

3.3.16 During prolonged periods of snow fall at locations where the use of salt for de-icing is prohibited, ploughing shall be continuous followed by repeated applications of de-icing chemical.

3.3.17 Lifting and removal of snow or ice from multi-level and grade separated interchanges and other locations shall be undertaken where necessary.

Sites for the disposal of snow or ice arising from such Operations shall comply with the requirement of the Scottish Environmental Protection Agency.

The Operating Company shall provide temporary traffic management, including road closures, where required for these Operations.

3.3.18 When ploughing to the nearside, other vehicles (unless stationary or on the hard-shoulder) shall not be overtaken. Snow or ice shall not be thrown over bridge parapets onto the road beneath. When ploughing to the central reservation, the speed used shall prevent the throwing of snow or ice into the path of traffic on the opposite carriageway.

3.3.19 In the event of significant snow falls, where snow ploughing being carried out by the front line and reserve Winter Service Plant is not sufficient, the Operating Company shall deploy additional Winter Service Plant for snow clearance to ensure delays caused by the weather conditions are kept to a minimum.

3.3.20 When machine snow clearance is not suitable (including clearance around carriageway obstructions) hand snow clearance and salting shall be carried out.

3.3.21 Snow or ice shall be cleared in a manner that prevents it from landing on adjacent or underlying paved surfaces.

3.4 Freezing Rain/Rain Falling on Extremely Cold Surfaces

3.4.1 The Operating Company shall provide in its Winter Service Plan its proposals for dealing with freezing rain/rain falling on extremely cold surfaces including advance planning, operational arrangements and hazard mitigation measures. When preparing its Winter Service Plan the Operating Company shall take into account the guidance related to dealing with freezing rain contained in paragraph 5.6.6 of Part 5 of the *Highways Agency Network Management Manual*.

4. OPERATING COMPANY'S WINTER SERVICE PLANT

4.1 General

4.1.1 Annex 7.2/J of this Part details the minimum Winter Service Plant to be used in connection with the Winter Service. The Operating Company shall provide and ensure that the Winter Service Plant listed in Annex 7.2/J of this Part is available as necessary for the Winter Service.

4.1.2 The Operating Company shall ensure that the Winter Service Plant is maintained in accordance with manufacturers' recommendations.

In the event of a breakdown on any of the Operating Company's front line Winter Service Plant:

(i) details of the cause, time and location of the breakdown and any other relevant information shall be recorded,

(ii) the operator shall, if possible, return the vehicle to the nearest depot in order to minimise blockages and further disruption to the network, and

(iii) the Operating Company shall make immediate arrangements for reserve Winter Service Plant to be made available in order to comply with the requirements of this Part.

4.1.3 When used on the Trunk Roads for operative training and maintenance runs, the spinner disc at the rear of the Operating Company's Winter Service Plant shall be covered in such a way that damage caused by sharp edges in the event of an accident is reduced to a minimum.

4.1.4 Front line and reserve Winter Service Plant shall be fitted with on-board electronic data loggers in accordance with the requirements of clause 2803AR of the Specification.

4.1.5 The onboard electronic data loggers shall be capable of transmitting their data in near real time to a web accessible database in accordance with the requirements of clause 2804AR of the Specification.

In the event of an on board electronic data logger malfunction, the Operating Company shall prepare a similar written record within 12 hours.

4.1.6 The Operating Company shall measure and record the weight of de-icing material spread on each occasion on each precautionary treatment Route. Such apparatus shall either be fitted to Winter Service Plant or located at depots and shall be additional to the data loggers.

4.1.7 In September and January of each Annual Period, the Operating Company shall calibrate all equipment for spreading de-icing material:

(i) in accordance with the requirements of British Standard 1622:1989, or

(ii) where British Standard 1622:1989 does not provide for the calibration of any de-icing spreading equipment, in a manner proposed in writing by the Operating Company and consented to in writing by the Director. As a minimum the Operating Company shall provide details of the Winter Service Plant supplier's calibration method to the Director, and

(iii) in accordance with the requirements of the specific material being used.

4.1.8 September testing shall comply with the requirements of tests 'A' and 'B' and January testing shall comply with the requirements of test 'B' of British Standard 1622:1989.

4.1.9 Re-calibration and testing shall be carried out after repairs to the spreading equipment and at other times when necessary to ensure the accuracy of de-icing material spreading.

All calibration and re-calibration shall be independently carried out and certified. Calibration Certificates shall be held in accordance with the requirements of the Winter Service Plan and the Management System.

4.1.10 The Winter Service Plant that is used for spreading de-icing materials on the roads within the Unit shall be of sufficient capacity to enable the Operating Company to fulfil its obligations for Winter Service Operations.

4.1.11 Winter Service Plant used for spreading pre-wetted salt shall:

(i) be capable of delivering a constant supply of brine of the appropriate concentration in accordance with paragraph 5.3.5 of this Part,

(ii) comply with the requirements of this Part where such requirements are not inconsistent with the spreading of pre-wetted salt, and

(iii) comply with any other requirements to ensure the effective distribution of pre-wetted salt to comply with the requirements of this Part.

The Operating Company shall demonstrate to the Director that the brine delivery system of the Winter Service Plant used for spreading pre-wetted salt meets all the requirements of this Part and the Operating Company shall provide in writing to the Director the method that will be employed to ensure that the quantity of the brine being applied during each Route treatment is correct.

4.1.12 Winter Service Plant used shall comply with the requirements of this Part to ensure the effective distribution of potassium acetate and other de-icing materials.

4.1.13 The Operating Company shall provide a range of snowploughs or other winter service plant that is capable of clearing all snow conditions on all carriageway Routes, footways (including those on bridge decks, footbridges and cycleways in the Unit.

4.1.14 Snow blowers for carriageways shall as a minimum:

(i) be capable of blowing up to 600 tonnes of snow per hour,

(ii) have a width of cutter head of at least 1.8 metres,

(iii) be capable of operating in up to four metres depth of snow, and

(iv) be fitted with lights to permit effective operation during poor visibility and the hours of darkness.

4.1.15 Snow blowers for footways/bridge service roads shall as a minimum;

(i) be capable of blowing up to 35 tonnes of snow per hour,

(ii) have a width of cutter head of at least 0.5 metres,

(iii) be capable of operating in up to 0.5 metres depth of snow, and

(iv) be fitted with lights to permit effective operation during poor visibility and the hours of darkness.

4.1.16 All Winter Service Plant used for Winter Service Operations shall:

(i) comply with the requirements of this Part,

(ii) be fitted with a snowplough, and

(iii) have a minimum of two additional headlamps fitted to permit forward visibility when a snow plough is fitted.

4.2 Front line, Reserve, Additional and Loading Winter Service Plant

4.2.1 The front line Winter Service Plant must consist of a minimum of:

(i) for carriageways, four nine cubic metre vehicles,

(ii) for Winter Service Patrols, two six cubic metre vehicles, and

(iii) two snow blowers.

This does not relieve the Operating Company of any other obligations or requirements under this Contract.

4.2.2 The Operating Company's minimum front line, reserve and additional Winter Service Plant available for the Winter Service shall be as referred to in Appendix WSP4 to

Annex 7.2/J of this Part. The minimum loading Winter Service Plant available within the Unit for loading front line, reserve and additional Winter Service Plant shall also be as referred to in Appendix WSP4.

4.2.3 Front line Winter Service Plant comprises vehicles and equipment permanently available within the Unit that is required for:

(i) precautionary treatments,

(ii) snow or ice clearance to a fallen or formed depth not exceeding 100 millimetres, but excluding Winter Service Plant not required to be capable of spreading whilst echelon ploughing,

(iii) Winter Service Patrols, and

(iv) compliance with the requirements of this Part.

4.2.4 All front line Winter Service Plant shall be fitted with measuring devices for air temperature and road surface temperature that shall be capable of transmitting data to the on-board data logger system for remote real time display on the Computerised Road Weather Information System.

4.2.5 Front line Winter Service Plant shall, as a minimum, have the ability to:

(i) carry out precautionary treatment to all Routes simultaneously,

(ii) carry out Winter Service Patrols clear ice and snow lying to a depth up to 100 millimetres,

(iii) spread pre-wetted salt, and

(iv) apply potassium acetate on bridge decks, bridge service roads and footways.

4.2.6 The Operating Company's reserve Winter Service Plant shall be that part of the Winter Service Plant permanently available within the Unit to supplement front line Winter Service Plant for the Winter Service in situations:

(i) when such front line Winter Service Plant may not be available for whatever reason for the Winter Service, or

(ii) to clear snow or ice in accordance with the requirements of this Part.

The reserve Winter Service Plant may also be used to supplement front line Winter Service Plant in snow conditions.

4.2.7 The additional Winter Service Plant shall be that part of the Winter Service Plant that is available for the Winter Service, either directly under the control of the Operating Company or through contingency arrangements with third parties, to deal with:

(i) snow or ice lying to a depth of more than 100 millimetres, and

(ii) any other winter weather conditions which cannot be managed by front line or reserve Winter Service Plant.

4.2.8 Details of additional Winter Service Plant shall be as referred to in Appendix WSP4 to Annex 7.2/J of this Part.

5. DE-ICING MATERIALS

5.1 General

5.1.1 The Operating Company shall procure and provide the salt and other de-icing materials necessary to comply with the Winter Service requirements.

5.1.2 The Operating Company shall provide the minimum operational stock levels at the start of the Winter Service Period as detailed in Appendix WSP3 to Annex 7.2/J of this Part. If stocks have reduced to 90 percent on 21 December in any Winter Service Period, the Operating Company shall restock to 100 percent of the full pre-season stocks.

5.1.3 Salt for de-icing shall be 6.3 millimetre grading particle size complying with British Standard 3247:2011 and treated with an anti-caking agent.

5.1.4 The method of salt storage at loading points shall ensure that the moisture content of the stored salt does not exceed four percent. Should the moisture content of salt exceed four percent, the Operating Company shall take all measures necessary to ensure compliance with the requirements of this Part is regained.

Where moisture content is deliberately increased to deal with low humidity conditions, the spread rate shall not be increased.

5.1.5 Within 10 Working Days of each delivery, salt shall be tested by the Operating Company at loading points in accordance with British Standard 3247:2011 and results recorded to ascertain:

(i) moisture content (one test per 500 tonnes),

(ii) particle size distribution (one test per 500 tonnes),

(iii) chloride content (one test per 1500 tonnes), and

(iv) soluble sulphate compounds (one test per 1500 tonnes).

5.1.6 Salt stocks shall be tested by the Operating Company for salt moisture content at monthly intervals throughout each Winter Service Period and the results shall be recorded. As a minimum, the salt should be tested at the base, centre and top of the stockpile.

5.1.7 The Operating Company shall store materials test data on an electronic database.

5.1.8 Potassium Acetate used for de-icing Operations at the locations specified in Table 7.2.I.1 of Annex 7.2/I shall comply with the Ministry of Defence Specification 68-118 (De-icing/Anti-Icing Fluid for Runways) unless otherwise consented to in writing by the Director.

5.2 Pre-wetted Salt

5.2.1 Salt for de-icing material as part of pre-wetted salt Operations, not including the salt to be used in producing brine, shall be 6.3 millimetre grading particle size complying with British Standard 3247:1991 or equivalent.

5.2.2 Salt for de-icing material as part of pre-wetted salt Operations to be used in producing brine shall be suitable for such production.

5.2.3 For pre-wetted salt spreading Operations, the spread rates set out in Table 7.2.K.2 of Annex 7.2/K of this Part shall represent the total weight of the spread material.

5.2.4 Brine added to salt during spreading Operations shall comprise 30 percent of the total spread material by weight, giving a 70 percent salt: 30 percent brine solution.

5.2.5 Brine solution with a concentration of 23 percent dissolved sodium chloride shall be used as the pre-wetting agent.

Where air temperatures are forecast to fall below minus 15 degrees centigrade, the brine shall be diluted by the addition of five percent to ten percent water to prevent re-crystallisation of the salt. The addition of water shall be undertaken in a manner which ensures that the water and brine is thoroughly mixed to produce a consistent concentration of brine.

5.2.6 The Operating Company shall arrange for sufficient brine to be stored at each depot to treat simultaneously, at a maximum spread rate, all precautionary treatment Routes serviced from that depot. An additional quantity of 20 percent brine above the minimum shall be held in reserve.

The brine within the storage facilities shall be replenished within two hours of being depleted.

5.2.7 Sensors with digital read outs shall be fitted to the Operating Company's storage facilities to measure the salt concentration of the brine automatically.

Daily checks shall be carried out by the Operating Company using a saturation meter and the results shall be stored electronically. Water supplies to saturator units shall be protected from freezing by appropriate measures.

5.3 Alternative De-icing Materials

5.3.1 In extreme conditions, such as when temperatures drop below levels at which sodium chloride is effective, the Operating Company shall use alternative de-icing materials in accordance with guidance on use of such materials. Such alternative de-icing material shall be described in the Winter Service Plan.

5.3.2 The Operating Company shall provide in its Winter Service Plan its proposals for using the alternative de-icer material in accordance with published guidance, including the UK Roads Board publication *Treatments for Extreme Cold* and *Guidance on the use in Scotland of Five Alternative De-icers to Salt Suitable for use in Lower Temperatures*.

5.3.3 The Operating Company shall provide and store a minimum of 10,000 litres, or equivalent, of alternative de-icing material within the Unit to deliver the requirements of paragraph 5.3.1 of this Part.

5.3.4 The Operating Company shall replenish the original alternative de-icer stock when the quantity has reduced to a minimum of 5,000 litres.

5.4 Abrasive Aggregates

5.4.1 A single sized abrasive aggregate with particle size of six millimetres, or five millimetres sharp sand having low fines content, shall be added to the salt in a 50 percent salt: 50 percent abrasive aggregate or sand mixture in accordance with the requirements of this Part.

5.5 Materials Storage

5.5.1 Salt and other de-icing materials shall be stored in a covered structure within the Operating Company’s depots to ensure compliance with the requirements of this

Part and the supplier's written instructions in the case of additives, potassium acetate and any other de-icing materials.

5.5.2 The Operating Company shall satisfy itself that arrangements for storage, handling and loading of de-icing materials at the loading points are adequate to achieve the specified response times.

5.5.3 Where there is no provision for covered storage at Commencement of Service Date 1, the Operating Company shall provide such storage no later than 12 months after Commencement of Service Date 1. Prior to the provision of such storage, all salt stored externally shall be covered in protective sheeting in a manner that prevents the ingress of moisture into the material as far as is practicable.

5.5.4 The Operating Company shall safeguard and manage all de-icing material stock and storage facilities.

5.5.5 The Operating Company shall ensure that de-icing material stock does not become contaminated with foreign matter likely to cause damage to Winter Service Plant, cause the de-icing material to fail to comply with the requirements of this Part or adversely affect road users.

This is Annex 7.2/A to Schedule 7 Part 2 referred to in the foregoing Agreement between Scottish Ministers and Amey LG Limited.

SCOTTISH MINISTERS' REQUIREMENTS

SCHEDULE 7 PART 2

WINTER SERVICE

ANNEX 7.2/A – Winter Service Plan

SCOTTISH MINISTERS' REQUIREMENTS

SCHEDULE 7 PART 2

WINTER SERVICE

ANNEX 7.2/A – Winter Service Plan

1. MANAGEMENT ARRANGEMENTS

The Winter Service Plan shall provide the following details:

1.1 **Winter Service Manager**

1.1.1 Name,

1.1.2 Qualifications,

1.1.3 Experience,

1.1.4 Responsibilities.

1.2 **Winter Service Duty Officers**

1.2.1 Names,

1.2.2 Qualifications,

1.2.3 Experience,

1.2.4 Responsibilities.

1.3 **Monitoring Arrangements**

1.3.1 Monitoring arrangements during Normal Working Hours,

1.3.2 Monitoring arrangements outwith Normal Working Hours.

1.4 **Personnel Resources**

1.4.1 Names of staff and labour resources,

1.4.2 Availability rosters including names, addresses and telephone numbers of the staff listed.

1.5 **Call out arrangements**

1.5.1 Call out arrangements during Normal Working Hours,

1.5.2 Call out arrangements outwith Normal Working Hours,

1.5.3 Contact arrangements during Normal Working Hours,

1.5.4 Contact arrangements outwith Normal Working Hours,

1.5.5 Mobilisation times.

1.6 **Communications Equipment**

1.7 **Training for Managers and Other Staff**

1.7.1 Details of previous training,

1.7.2 Details of proposed training.

2. WEATHER FORECASTING

2.1 **Purpose**

2.2 **Methodology**

2.3 **Weather forecasting service**

2.3.1 Climatic domains,

2.3.2 Weather radar,

2.3.3 Ice sensors and weather forecast sites,

2.3.4 Thermal mapping,

2.3.5 Location plans.

2.4 **Computer Systems**

3. MONITORING ARRANGEMENTS FOR AREAS REQUIRING SPECIAL ATTENTION

4. DECISION MAKING

4.1 **Role of the Winter Service Manager**

4.2 **Role of the Winter Service Duty Officers**

4.2.1 Winter Service Patrol mobilisation,

4.2.2 Proposals for precautionary and additional de-icing treatments when low confidence forecasts are issued for variable road and weather conditions,

4.2.3 Proposals for monitoring the effectiveness of de-icing materials,

4.2.4 Road closure and snow gate operational procedures,

4.2.5 Proposals for dealing with areas requiring special attention,

4.2.6 Proposals for using alternative de-icers in extreme temperatures.

5. LIAISON

5.1.1 Liaison with:

(i) the Police,

(ii) the Traffic Scotland Operations and Infrastructure Services Contractor,

(iii) adjacent road and highway authorities,

(iv) adjacent Trunk Road operating companies including DBFOs, and

(v) Network Rail.

6. COMMUNICATION

6.1.1 Communication with:

(i) the Director,

(ii) the police,

(iii) the Traffic Scotland Operations and Infrastructure Services Contractor,

(iv) adjacent road and highway authorities, and

(v) adjacent Trunk Road operating companies including DBFOs.

7. MUTUAL AID ARRANGEMENTS

7.1 Mutual Aid

7.1.1 A statement explaining what Mutual Aid arrangements are in place, including contact details.

8. WINTER SERVICE PATROLS

8.1 Winter Service Plant and Reporting

8.1.1 Winter Service Plant provided by the Operating Company for the Winter Service Patrols shall be as referred to in Appendix WSP1 to Annex 7.2/J of this Part.

8.1.2 A Winter Service Patrol Report shall be provided by the Operating Company in the format referred to in Appendix WSP1 to Annex 7.2/J of this Part.

9. TREATMENT ROUTES

9.1.1 The Operating Company shall provide the following information in Appendix WSP2 to Annex 7.2/J of this Part:

(i) precautionary treatment routes, including sections shared with an adjacent road authority,

(ii) contingency plans for alternative access to precautionary treatment routes where normal access is prevented due to weather related or other Incidents, and

(iii) locations of de-icing material loading points.

9.1.2 The Operating Company shall provide details of cycling facilities in urban areas in Appendix WSP2 to Annex 7.2/J of this Part.

10. SNOW AND ICE CLEARANCE

10.1.1 Description of arrangements and resources for managing snowfall. The Winter Service Plan shall demonstrate how all carriageways shall be maintained free from snow or ice as far as is reasonably practicable and in accordance with Annex 7.2/D of this Part.

10.1.2 Road closure procedure including use of snow gates.

10.1.3 Prolonged snowfall strategy, including use of additional Winter Service Plant and operative resources.

10.1.4 Snow and ice clearance shall be carried out in accordance with Annex 7.2/K of this Part.

10.1.5 Arrangements for safe clearance of snow or ice from wide single carriageways.

10.1.6 Arrangements for safe clearance of snow or ice adjacent to vertical concrete barriers.

10.1.7 Treatment strategy for bridge service roads, footways (including those on bridge decks), footpaths and cycling facilities including location of salt bins where applicable in accordance with Annex 7.2/E of this Part.

10.2 Plans showing the location of the footways (including those on bridge decks), bridge service roads, footbridges and cycling facilities.in Categories A, B, C and D.

11. FREEZING RAIN/RAIN FALLING ON EXTREMELY COLD SURFACES

11.1 Advance Planning

11.1.1 Advanced Planning for freezing rain/rain falling on extremely cold surfaces should include as a minimum:

(i) Arrangements for liaison with the police, Traffic Scotland Operations and Infrastructure Services Contractor and other interested parties.

(ii) Risk Assessments.

11.2 Operational Arrangements

11.2.1 Operational arrangements for freezing rain/rain falling on extremely cold surfaces should include as a minimum:

(i) Details of treatment regimes in advance of, during and following a freezing rain event.

(ii) Arrangements for monitoring.

11.3 Hazard Mitigation

11.3.1 Hazard mitigation for freezing rain/rain falling on extremely cold surfaces should include as a minimum:

(i) Arrangements for informing road users including use of Variable Message Signs.

(ii) Road closure procedure, rolling blocks and convoy arrangements.

12. DE-ICING MATERIALS

12.1 Details

12.1.1 For each type of de-icing material, including alternatives:

(i) detailed specification of material,

(ii) storage conditions, system types and capacities,

(iii) details on testing methods, including their type and frequency,

(iv) state suppliers, including any secondary suppliers,

(v) state any importers used to meet supply demands,

(vi) stock levels (total and split by location), and

(vii) details of re-stocking, including procurement mechanism and details of stock level monitoring.

12.1.2 Details of de-icing materials stocks shall be provided by the Operating Company in Appendix WSP3 to Annex 7.2/J of this Part and shall take account of the minimum stock levels to be maintained as referred to in the Appendix.

13. WINTER SERVICE PLANT

13.1.1 The Operating Company's front line Winter Service Plant and reserve Winter Service Plant available within the Unit for the Winter Service shall be provided by the Operating Company in Appendix WSP4 to Annex 7.2/J of this Part.

13.1.2 The Operating Company's additional Winter Service Plant available through contingency arrangements and arrangements for its mobilisation for the Winter Service shall be provided by the Operating Company in Appendix WSP4 to Annex 7.2/J of this Part.

13.1.3 Loading Winter Service Plant available within the Unit for loading such front line, reserve and additional Winter Service Plant shall be provided by the Operating Company in Appendix WSP4 to Annex 7.2/J of this Part.

13.2 Calibration of Winter Service Plant

13.2.1 Calibration arrangements and procedures for front line and reserve Winter Service Plant, in accordance with paragraphs 4.1.7, 4.1.8 and 4.1.9 of this Part.

13.2.2 The Winter Service Plan will describe how the requirements of this Part shall be met and where and how the calibration Certificates will be held.

14. COMPOUNDS, DEPOTS AND FACILITIES

14.1 A schedule of compounds, depots and facilities covering the network within the Unit shall be provided by the Operating Company in Appendix WSP5 to Annex 7.2/J of this Part.

15. MAPS DRAWINGS AND GRAPHICAL INFORMATION

15.1 Maps

15.1.1 Provide scale maps for the following:

(i) precautionary treatment routes for carriageways, including on/off slips, service roads, car parks and depots,

(ii) precautionary treatment routes for bridge service roads, footways, footbridges and cycling facilities,

(iii) reactive treatment routes for footways, footbridges and cycling facilities,

(iv) Winter Service Patrol routes,

(v) ploughing routes for carriageways, including on/off slips and depots,

(vi) road sensors including sensor types and where these sites are equipped with weather cameras, (map to differentiate between single and bi-directional cameras),

(vii) snow gates

(viii) snow fences,

(ix) shelter belts,

(x) snow poles,

(xi) snow or ice and hidden message signs,

(xii) salt bins,

(xiii) vertical concrete barriers,

(xiv) other facilities, and

(xv) where route based forecasting is not used, climatic domains and the sensors used to generate domain forecasts.

16. COMPILING AND MAINTAINING RECORDS

17. SNOW POLES

17.1 Maintenance, replacement of damaged or missing snow poles, refurbishment and reserve stocks.

18. SNOW GATES

19. MAINTENANCE, OPERATION AND LIAISON SALT BINS

19.1 Stock level monitoring and replenishment procedures.

20. SALT MEASUREMENT APPARATUS

20.1 Equipment and locations and recording methods.

This is Annex 7.2/B to Schedule 7 Part 2 referred to in the foregoing Agreement between Scottish Ministers and Amey LG Limited.

SCOTTISH MINISTERS' REQUIREMENTS

SCHEDULE 7 PART 2

WINTER SERVICE

ANNEX 7.2/B – Winter Service Report

SCOTTISH MINISTERS' REQUIREMENTSSCHEDULE 7 PART 2

WINTER SERVICE

ANNEX 7.2/B – Winter Service Report

1 The Winter Service report shall provide:

1.1 An executive summary of the annual report.

1.2 An overview and review of the service provided.

1.3 A summary of key performance reports.

1.4 Information on significant events and related actions.

1.5 An assessment of the accuracy of weather forecasts provided.

1.6 An assessment of road sensor performance.

1.7 An analysis of the ability of the Management System to capture reported Non-Conformances.

1.8 Details of innovations and improvements implemented.

1.9 Recommendations for continuous improvement.

1.10 Details of actions taken during periods of low confidence forecasting for variable and marginal winter weather conditions.

1.11 Analysis for the performance of Winter Service Plant, including reserve Winter Service Plant.

1.12 Details of Mutual Aid offered and received.

1.13 Details of action taken during extreme low temperatures and an analysis of the results.

1.14 Details of the use of additional Winter Service Plant and an analysis of the performance.

This is Annex 7.2/C to Schedule 7 Part 2 referred to in the foregoing Agreement between Scottish Ministers and Amey LG Limited.

SCOTTISH MINISTERS' REQUIREMENTS

SCHEDULE 7 PART 2

WINTER SERVICE

ANNEX 7.2/C – Winter Service Patrols

SCOTTISH MINISTERS' REQUIREMENTS

SCHEDULE 7 PART 2

WINTER SERVICE

ANNEX 7.2/C – Winter Service Patrols

1. The Category A Winter Service Patrols are provided in Table 7.2.C.1.

Table 7.2.C.1 – Category A Winter Service Patrol Routes

Forth Bridges Unit	
Route	**Category**
A90	A
M90	A
A90/M90	A
A823 (M)	A

2. Details of the Operating Company's Winter Service Patrol routes shall be as provided by the Operating Company in Table 7.2.J.2 of Appendix WSP1 to Annex 7.2/J of this Part.
3. Patrol reports shall be recorded in accordance with Table 7.2.J.3 of Appendix WSP1.

This is Annex 7.2/D to Schedule 7 Part 2 referred to in the foregoing Agreement between Scottish Ministers and Amey LG Limited.

SCOTTISH MINISTERS' REQUIREMENTS

SCHEDULE 7 PART 2

WINTER SERVICE

ANNEX 7.2/D – Snow Clearance

SCOTTISH MINISTERS' REQUIREMENTS

SCHEDULE 7 PART 2

WINTER SERVICE

ANNEX 7.2/D – Snow Clearance

Table 7.2.D.1 – Snow Clearance

Condition Criteria	Category A Patrol Routes		Non Category A Patrol Routes	
	Dual Carriageways & Motorways		Dual Carriageways	Wide Single 2+1 (WS 2 + 1) & Single Carriageways
	Number of Existing Lanes		Number of Existing Lanes	
	2	3 or More	2	1 or 2 (WS 2 + 1)
	Minimum number of lanes in each direction free from ice and snow as far as is reasonably practicable		Minimum number of lanes in each direction free from ice and snow as far as is reasonably practicable (except where snow gates)	
Snow at any time	1	2	1	1
Following clearance of minimum lanes or the cessation of snow fall all lanes are to be clear of snow	6 hours	6 hours	12 hours	12 hours

This is Annex 7.2/E to Schedule 7 Part 2 referred to in the foregoing Agreement between Scottish Ministers and Amey LG Limited.

SCOTTISH MINISTERS' REQUIREMENTS

SCHEDULE 7 PART 2

WINTER SERVICE

ANNEX 7.2/E –Footways (including those on bridge decks), Footbridges and Category A, B, C and D Footways, Footbridges and Cycle Facilities

SCOTTISH MINISTERS' REQUIREMENTS

SCHEDULE 7 PART 2

WINTER SERVICE

ANNEX 7.2/E –Footways (including those on bridge decks), Footbridges and Category A, B, C and D Footways, Footbridges and Cycle Facilities

Table 7.2.E.1 –Footways (including those on bridge decks), Footbridges Footways, Footbridges and Cycle Facilities Categories A, B, C and D and Cycle Facilities– Response Times and Clearance Requirements for Ice

Categories	Requirements
A and B	Apply de-icing treatment before 08.00 hours each morning to any ice which has formed.
C	Clear all ice by 17.00 hours on the same day the ice formed excluding Saturdays and Sundays when the area shall be cleared by 17.00 hours on the Monday immediately following.
A, B and C	Following clearance of ice or if ice has melted naturally during the day, spread anti-icing materials to prevent ice formation on the cleared surfaces in accordance with paragraph 3.1.17 of this Part.
D	These footways, footbridges and cycleways shall receive treatment when required by the Director.

Table 7.2.E.2 Footways, Footbridges and Cycle Facilities Categories A, B, C and D – Response Times and Clearance Requirements for Snow or Ice Occurring Together

Categories	Requirements			
	General	**Between 06.00 and 18.00 hours**	**Between 08.00 and 17.00 hours**	**Treatments out with daytime hours**
A and B	Between the hours of 06.00 and 18.00, commence snow clearing as soon as practicable to prevent compaction by traffic. Ploughing and snow blowing on bridge decks should be continuous thereafter to prevent a build up of	Clear all snow within 2 hours of snow ceasing to fall. On wide Routes, 1.2 metre minimum width shall be cleared initially.		Clear snow when required by the Director.

Categories	Requirements			
	snow.			
	General	**Between 06.00 and 18.00 hours**	**Between 08.00 and 17.00 hours**	**Treatments out with daytime hours**
A,B and C		Following clearance of snow, spread anti-icing materials to prevent ice formation on cleared surfaces in accordance with paragraph 3.1.17 of this Part. Note brine shall not be used as the anti-icing agent where compacted snow or ice lenses remain on the surface of the Route.	Following clearance of snow, spread anti-icing materials to prevent ice formation on cleared surfaces in accordance with paragraph 3.1.17 of this Part. Note brine shall not be used as the anti-icing agent where compacted snow or ice lenses remain on the surface of the Route.	
D	These footways, footbridges and cycleways shall receive treatment when required by the Director.			

Table 7.2.E.3 – Category A Footways (including those on bridge decks), Footbridges and Cycle Facilities within the Unit

All footways, footbridges and cycle facilities within the Unit shall be treated as category A.

This is Annex 7.2/F to Schedule 7 Part 2 referred to in the foregoing Agreement between Scottish Ministers and Amey LG Limited.

SCOTTISH MINISTERS' REQUIREMENTS

SCHEDULE 7 PART 2

WINTER SERVICE

ANNEX 7.2/F – Location of Known Areas Requiring Special Attention

SCOTTISH MINISTERS' REQUIREMENTS

SCHEDULE 7 PART 2

WINTER SERVICE

ANNEX 7.2/F – Location of Known Areas Requiring Special Attention

Table 7.2.F.1 – Frost Susceptible Areas

Road Number	Location of Frost Susceptible Areas
None	

Table 7.2.F.2 – Water Run Off Locations

Road Number	Water Run Off Location
None	

Table 7.2.F.3 – Gradient Locations

Road Number	Gradient Location
None	

This is Annex 7.2/G to Schedule 7 Part 2 referred to in the foregoing Agreement between Scottish Ministers and Amey LG Limited.

SCOTTISH MINISTERS' REQUIREMENTS

SCHEDULE 7 PART 2

WINTER SERVICE

ANNEX 7.2/G – Location Details

SCOTTISH MINISTERS' REQUIREMENTS

SCHEDULE 7 PART 2

WINTER SERVICE

ANNEX 7.2/G – Location Details

Locations of Snow Fences, Snow Gates, Salt Bins: as shown in Table 7.2.G.1.

Locations of Road Sensors Forecast Sites: as shown in Table 7.2.G.3.

Locations of Snow Poles: as shown in Table 7.2.G.4.

Locations of vertical concrete barriers: as shown in Table 7.2.G.5.

Table 7.2.G.1 – Locations of Snow Fences, Snow Gates and Salt Bins

Road Number	Snow Fence (Metres)	Snow Gates (Number)	Salt Bins (Number)
Public car park at Ferrymuir Gait	0	0	8
A90	0	0	7

Table 7.2.G.3 – Locations of Road Sensors and Forecast Sites

Road Number	Location
M90	Halbeath

Table 7.2.G.4 – Locations of Snow Poles

Route XX					
Link	**Section**	**Start Chainage**	**End Chainage**	**Spacing (metre)**	**Number**
None					

Table 7.2.G.5 – Locations of Vertical Concrete Barriers

Route XX					
Link	**Section**	**Start Location**	**End Location**	**No.**	**Link**
None					

This is Annex 7.2/H to Schedule 7 Part 2 referred to in the foregoing Agreement between Scottish Ministers and Amey LG Limited.

SCOTTISH MINISTERS' REQUIREMENTS

SCHEDULE 7 PART 2

WINTER SERVICE

ANNEX 7.2/H – Records

SCOTTISH MINISTERS' REQUIREMENTS

SCHEDULE 7 PART 2

WINTER SERVICE

ANNEX 7.2/H – Records

1 Records shall include the following:

(i) decisions taken, when and by whom,

(ii) planned and actual treatment Records,

(iii) planned and actual response times achieved,

(iv) planned and actual commencement times,

(v) planned and actual Route times,

(vi) planned and actual spread rates,

(vii) observations and actions taken by the Winter Service Patrols,

(viii) output from Winter Service Plant on-board data loggers,

(ix) Winter Service Plant down time and software faults,

(x) Winter Service Plant deployment Records (including vehicle location Records) and driver and operator logs,

(xi) logs (both manual and electronic) for telephone, electronic mail and two way communication calls,

(xii) loading point de-icing stocks and replenishment orders,

(xiii) ice prediction system Records,

(xiv) weather forecasts and actual weather experienced,

(xv) complaints by members of the public and road users,

(xvi) accidents during winter conditions,

(xvii) road closures due to winter conditions,

(xviii) weights and volumes as appropriate for the amount of de-icing material(s) spread on each Route for each treatment,

(xix) pre- and mid-season road sensor calibration systems,

(xx) Winter Service Plant calibration Certificates, and

(xxi) actual salt stocks held.

This is Annex 7.2/I to Schedule 7 Part 2 referred to in the foregoing Agreement between Scottish Ministers and Amey LG Limited.

SCOTTISH MINISTERS' REQUIREMENTS

SCHEDULE 7 PART 2

WINTER SERVICE

ANNEX 7.2/I – Potassium Acetate Treatment

SCOTTISH MINISTERS' REQUIREMENTS

SCHEDULE 7 PART 2

WINTER SERVICE

ANNEX 7.2/I – Potassium Acetate Treatment

Potassium acetate treatment shall be applied at the locations specified in Table 7.2.I.1 including those parts of the Trunk Road 400 metres beyond the limits of each of the Forth Road Bridge and the Queensferry Crossing.

Table 7.2.I.1

Road Number	Location
A90	Forth Road Bridge
M90	Queensferry Crossing

This is Annex 7.2/J to Schedule 7 Part 2 referred to in the foregoing Agreement between Scottish Ministers and Amey LG Limited.

SCOTTISH MINISTERS' REQUIREMENTS

SCHEDULE 7 PART 2

WINTER SERVICE

ANNEX 7.2/J – Appendices for Winter Service Plan

SCOTTISH MINISTERS' REQUIREMENTS

SCHEDULE 7 PART 2

WINTER SERVICE

ANNEX 7.2/J – Appendices for Winter Service Plan

APPENDIX WSP1

Table 7.2.J.1 – Winter Service Plant for all Winter Service Patrols

Type and Registration No	Depot Location	Specification including Capacity	Quantity
18 tonne 4x2, reg to be confirmed	Queensferry	6 cubic metre pre-wet spreader with additional tank and spray bar.	2

Table 7.2.J.2 – Winter Service Patrol Routes

Network 1

Category (A/B)	Route	Depot	Route Description	Depot to Route (km)	Time to Route (mins)	Patrol Length (km)	Avg Speed (km/hr)	Route Time (mins)	Route to Depot (km)
A1	M90, A92	Queensferry	(Depot – M9 Jct 1A) M90 Jct 1A(M9) – M90 Jct2 (Masterton) via Forth Road Bridge, M90 Jct2 (Masterton) – M90 Jct 3 Halbeath M90 Jct 3 Halbeath – A92 Cowdenbeath, U turn A92 Cowdenbeath - M90 Jct 3 Halbeath M90 Jct 3 Halbeath – M90 Jct2 (Masterton), M90 Jct2 (Masterton) - M90 Jct 1A(M9) via Forth Road Bridge	10	15	44	64	41	10
A2	A90, A9000, M90, A823 (M)	Queensferry	(Depot – A90 Dalmeny N/b)) A90 Dalmeny – A9000 Scotstoun Junction A9000 Scotstoun Junction - M90 Ferrytoll Junction via Forth Road Bridge M90 Ferrytoll Junction – M90 Jct 4 Kelty, U turn M90 Jct 4 Kelty - M90 Jct2 (Masterton), A823(M) – A823/B980 Pitreavie Roundabout, U turn, A823(M) Pitreavie Roundabout – M90 Jct2 (Masterton), M90 Jct2 (Masterton) - M90 Ferrytoll Junction A9000 Ferrytoll – A9000 Scotstoun Junction via Forth Road Bridge A9000 Scotstoun Junction – A90 Dalmeny	7	10	42	58	43	7

Network 2

Category (A/B)	Route	Depot	Route Description	Depot to Route (km)	Time to Route (mins)	Patrol Length (km)	Avg Speed (km/hr)	Route Time (mins)	Route to Depot (km)
A1	M90, A92	Queensferry	(Depot – M9 Jct 1A) M90 Jct 1A(M9) – M90 Jct2 (Masterton) via Queensferry Crossing, M90 Jct2 (Masterton) – M90 Jct 3 Halbeath M90 Jct 3 Halbeath – A92 Cowdenbeath, U turn A92 Cowdenbeath - M90 Jct 3 Halbeath M90 Jct 3 Halbeath – M90 Jct2 (Masterton), M90 Jct2 (Masterton) - M90 Jct 1A(M9) via Queensferry Crossing	10	15	48	65	44	10
A2	A90, A9000, M90, A823(M)	Queensferry	(Depot – A90 Dalmeny N/b)) A90 Dalmeny – M90 Scotstoun Junction - M90 Queensferry Junction, U turn M90 Queensferry Junction – Scotstoun – A90 Burnshot U turn A90 Burnshot - A9000 Scotstoun Junction – B800 Slip Road - A904 Echline Junction – Forth Road Bridge - M90 Ferrytoll Junction M90 Ferrytoll Junction – M90 Jct 4 Kelty, U turn M90 Jct 4 Kelty - M90 Jct2 (Masterton), A823(M) – A823/B980 Pitreavie Roundabout, U turn, A823(M) Pitreavie Roundabout – M90 Jct2 (Masterton), M90 Jct2 (Masterton) - M90 Ferrytoll Junction A9000 Ferrytoll – A9000 Scotstoun Junction via Forth Road Bridge A9000 Scotstoun Junction – Dedicated Bus Lane slip - A90 Dalmeny	7	10	58	60	58	7

Table 7.2.J.3 – Winter Service Patrol Report Record

Patrol Route…… **Date……** **Information checked by……**

Winter Service Patrol start and end time	**Weather conditions for Winter Service Patrol Route**		**Assessed road condition (by driver) (X)**				**Assessed residual salt level (by driver) (X)**			**Action implemented (use symbols provided below)***						**Route salted prior to patrol (X)**		
	Air (°C)	Road Surface temperature (°C)	Snow	Icy	Wet	Dry	High	Medium	Low	Action code	Treatment Type	Spread rate (g/m^2)	Approximate location of salting or other action	Treatment Start Time	Treatment End Time	Yes	No	Time of salting

*Action symbols:

1 Spot treatment as instructed by the Winter Service Duty Officers.

2 Spot treatment as determined by driver.

3 Route treatment as advised by the Winter Service Duty Officers.

4 Route treatment as determined by driver.

5 Attend to runoff or seepage on surface.

6 Remove obstruction (e.g. dead dog, fallen tree, and other obstructions.) from surface.

7 Pre-wetted Salt

8 Dry Salt

9 Potassium Acetate

APPENDIX WSP2

Table 7.2.J.4 - Precautionary Treatment Routes determined by the Operating Company (20 gramme routes) 2 Carriageway Routes, 1 Footpath Route.

Route No.	Depot	Description	Depot to Route (km)	Time to Route (mins)	Salting Length (km)	Aver Speed (km/hr)	Route Time (mins)	Route to Depot (km)	Alternative Access	Average Width of Route	Route Tonnage @20g/m2	Route Tonnage @40g/m2	Treatment type
		Network 1											
FRB-20	Queensferry	A90, A9000, M90 Forth Road Bridge	0.5	1	23.84 6.8	48	93.32	1.5	9.8 7.3	Rosyth	4.67 775 litres		Pre-wet/ Pot Acet
QC-20	Queensferry	M90, A92, A823(M) Queensferry Crossing	17	17	28.9	52	72.09	17	10.8	Rosyth	6.24		Pre-wet/ Pot Acet
FRBFC - 20	Queensferry	A9000 Forth Road Bridge Footpath/ Cycleways	1.0	2	10.4	19	23.6	0.2	3.6	Rosyth	584 litres		Pot Acet
		Network 2											
FRB-20	Queensferry	A90, A9000, M90 Forth Road Bridge	0.5	1	29.14 6.8	48	109.13	9.1	9.6 7.3	Rosyth	5.59 775 litres		Pre-wet/ Pot Acet
QC-20	Queensferry	M90, A92, A823(M) Queensferry Crossing	17	17	34.4 6.8	52	80.09	17	10.8 12.0	Rosyth	7.43 1273 litres		Pre-wet/ Pot Acet
FRBFC - 20	Queensferry	A9000 Forth Road Bridge Footpath/ Cycleways	1.0	2	10.9	19	23.6	0.2	3.6	Rosyth	612 litres		Pot Acet

*** - the tonnages identified in Table 7.2.J.4 can be divided by 0.7 to convert to wet salt tonnages**

Table 7.2.J.4 - Precautionary Treatment Routes determined by the Operating Company (40 gramme routes) 2 Carriageway Routes, 1 Footpath Route.

Route No.	Depot	Description	Depot to Route (km)	Time to Route (mins)	Salting Length (km)	Aver Speed (km/hr)	Route Time (mins)	Route to Depot (km)	Alternative Access	Average Width of Route	Route Tonnage @20g/m2	Route Tonnage @40g/m2	Treatment type
		Network 1											
FRB-40	Queensferry	A90, A9000, M90 Forth Road Bridge	0.5	1	23.84 6.8	48	93.32	1.5	9.8 7.3	Rosyth		9.35 1552 litres	Pre-wet/ Pot Acet
QC-40	Queensferry	M90, A92, A823(M) Queensferry Crossing	17	17	28.9	52	72.09	17	10.8	Rosyth		12.48	Pre-wet/ Pot Acet
FRBFC - 40	Queensferry	A9000 Forth Road Bridge Footpath/ Cycleways	1.0	2	10.4	19	23.6	0.2	3.6	Rosyth		1168 litres	Pot Acet
		Network 2											
FRB-40	Queensferry	A90, A9000, M90 Forth Road Bridge	0.5	1	29.14 6.8	48	109.13	9.1	9.6 7.3	Rosyth		11.19 1552 litres	Pre-wet/ Pot Acet
QC-40	Queensferry	M90, A92, A823(M) Queensferry Crossing	17	17	34.4 6.8	52	80.09	17	10.8 12.0	Rosyth		14.86 2546 litres	Pre-wet/ Pot Acet
FRBFC - 40	Queensferry	A9000 Forth Road Bridge Footpath/ Cycleways	1.0	2	10.9	19	23.6	0.2	3.6	Rosyth		1224 litres	Pot Acet

*** - the tonnages identified in Table 7.2.J.4 can be divided by 0.7 to convert to wet salt tonnages**

Table 7.2.J.5 - Ploughing Routes determined by the Operating Company

Route No.	Depot	Description	Depot to Route (km)	Time to Route (mins)	Aver Speed (km/hr)	Route Time (mins)	Route to Depot (km)	Alternative Access	Average Width of Route
FRB 40	Queensferry	Route vehicle plus 6x4 spreader in echelon	7	12	42	104	1.5	Rosyth	7.3
QC 40	Queensferry	Route vehicle plus 6x4 spreader in echelon	22	24	44	108	22	Rosyth	7.3
FRBFC 40	Queensferry	Transit Pick-up & plough	1.0	2	12	34	0.2	Rosyth	2.2

APPENDIX WSP3

Table 7.2.J.6 – Operational Salt Stock Levels

Operating Company	Minimum Salt Stock Level at Start of Season (tonnes)
Forth Bridges Unit	3,200

Operating Company	Minimum Potassium Acetate Stock Level at Start of Season (litres)
Forth Bridges Unit	120,000

De-icing Material (i.e. Dry salt/ABP/Potassium Acetate)	Location	Type (barn/open)	Min (tonnes) 1st Oct
2,700 Dry Salt 5,000 Litres ABP	Rosyth	Barn IBC Tanks	2,700 tonnes 5,000 litres
500 Dry Salt * 5,000 Litres ABP	Queensferry	Barn IBC Tanks	500 tonnes 5,000 litres
12,000 Litres Potassium Acetate	Queensferry	Tank	12,000 litres
108,000 Litres Potassium Acetate	Rosyth	Tank	108,000 litres

* we understand that the proposed dry salt barn in South Queensferry will be subject to review and Director consent.

Table 7.2.J.7 –Brine Production and Storage

Location	Type (saturator/storage only)	Capacity (L)	Min (L)
Rosyth	Saturator/Storage	10,000	5,200
Queensferry	Storage	7,000	2,000

APPENDIX WSP4

The Operating Company's Winter Service Plant

Table 7.2.J.8 - Front line Winter Service Plant permanently available and located in the Unit for Winter Service for carriageways- Minimum 4 No 9 cum vehicles: Minimum 2 No 6 cum vehicles (Winter patrols); 2 No snow blowers minimum

Type of Winter Service Plant & registration number	Depot location	Vehicle capacity	Number of vehicles	Plant use* (i), (ii), (iii)
32 tonne 8x4 Combi-speader	Queensferry	9 cub m 2500 litre	2	(i) & (iii)
26 tonne 6x4 spreader	Queensferry	9 cub m	2	(i) & (iii)
18 tonne 4x2 spreader	Queensferry	6 cub m	2	(ii)
Westa 650 Snow Blower Attachment	Queensferry		1	(iii)
Westa 650 Snow Blower Attachment	Rosyth		1	(iii)
80hp 4wd Tractor & mounted spreader/sprayer	Queensferry	1 cub m	1	(iii)
80hp 4wd Tractor & mounted spreader/sprayer	Rosyth	1 cub m	1	(iii)

all registration numbers to be confirmed.

* Table 7.2.J.8 KEY:

(i) precautionary treatments and clearance of snow or ice with a depth up to 100 millimetres.

(ii) Winter Service Patrols.

(iii) other arrangements to comply with the requirements of this Part.

Table 7.2.J.9 - Front line Winter Service Plant permanently available and located in the Unit for the Winter Service for bridge service roads, footways footbridges and cycling facilities

Type of Winter Service Plant & registration number	Depot location	Vehicle capacity	Number of vehicles	Plant use* (i), (ii), (iii)
Transit pick-up, mounted sprayer (Potassium Acetate)	Queensferry	600 litre sprayer.	1	(i), (ii)
Pedestrian Snow Blower	Queensferry		1	(ii)

*Table 7.2.J.9 KEY:

(i) precautionary treatments for Category A response.

(ii) snow clearance and ice clearance for Category A response.

(iii) snow or ice clearance for Category B, Category C and Category D response.

Table 7.2.J.10 - Reserve Winter Service Plant permanently available and located in the Unit for Winter Service for carriageways footways footbridges and cycling facilities

Type of Winter Service Plant & registration number	Depot location	Vehicle capacity	Number of vehicles	Plant use* (i), (ii), (iii)
26 tonne 6x4 spreader (carriageway)	Rosyth	9 cub m	1	(i) & (iii)
Transit pick-up, mounted sprayer (Potassium Acetate)	Queensferry	600 litre sprayer	1	(i), (ii)

* Table 7.2.J.10 KEY:

(i) precautionary treatment and clearance of snow with a depth up to 100 millimetres.

(ii) Winter Service Patrols.

(iii) other arrangements to comply with the requirements of this Part.

Table 7.2.J.11 - Additional Winter Service Plant

Type of Winter Service Plant & registration number	Depot location or third party operator and location	Number of vehicles	Mobilisation time in hours
Raiko Icebreaker. (Extreme conditions)	Transport Scotland	2	4
32 tonne 8x4 tipper	Neil Williams Haulage, Dalkeith	2	2
32 tonne 8x4 tipper	W H Malcolm, Grangemouth	2	2
Schmidt KLV Wedge snowplough	Rosyth	1	1
Schmidt KLV Wedge snowplough	Queensferry	1	1

Table 7.2.J.12 - Loading Winter Service Plant permanently available and located in the Unit at each loading point

Type of Winter Service Plant & registration number	Depot location	Vehicle capacity	Number of vehicles
JCB Telescopic Loader (or similar)	Queensferry	1.5 cu m	1
80hp 4wd Tractor with Loading Shovel	Queensferry	0.7 cu m	1
80hp 4wd Tractor with Loading Shovel	Rosyth	0.7 cu m	1

APPENDIX WSP5

The Operating Company's Compounds, Depots and Facilities

Table 7.2.J.13 – The Operating Company's Compounds, Depots and Facilities

Compound,Depot or Facility Name	Owner	Postal Address	Purpose	Access Arrangements	Contact Details	Facilities
South Gyle	PRUPIM	6 Redheughs Rigg, South Gyle, Edinburgh, EH12 9DQ	Mobilisation	Unlimited	To be advised on award of tender	Head Office
Queensferry	Scottish Ministers	Forth Road Bridge Admin Office, South Queensferry, West Lothian. EH30 9SF	Central Office & Main Depot	Unlimited	08452713050	Operational Depot
Europarc, Rosyth	Scarborough Muir per Ryden	Unit 5, Barham Rd, Forties Campus, Rosyth Europarc. KY11 SXB	Secondary Depot & Store	Unlimited	Cameron Whyte, Ryden. 01312256612	Operational Depot & Storage

This is Annex 7.2/K to Schedule 7 Part 2 referred to in the foregoing Agreement between Scottish Ministers and Amey LG Limited.

SCOTTISH MINISTERS' REQUIREMENTS

SCHEDULE 7 PART 2

WINTER SERVICE

ANNEX 7.2/K – Requirements for De-Icing Material Spread Rates

SCOTTISH MINISTERS' REQUIREMENTS

SCHEDULE 7 PART 2

WINTER SERVICE

ANNEX 7.2/K – Requirements for De-Icing Material Spread Rates

The tables in this Annex 7.2/K set out the decision making process for Winter Service:

Table 7.2.K.1 – Decision Making Matrix for Winter Service

<table>
<tr><th colspan="4">Decision Making Matrix for Winter Service</th></tr>
<tr><th></th><th colspan="3">Predicted Road Conditions</th></tr>
<tr><th>Road Surface Condition</th><th>Wet</th><th>Wet Patches</th><th>Dry</th></tr>
<tr><td>May fall below 1°C</td><td rowspan="2">Spreading before frost</td><td>Spreading before frost (See note A)</td><td>No action likely, monitor weather (See note A)</td></tr>
<tr><td rowspan="4">Expected to fall below 1°C</td><td colspan="2">Spreading before frost (see note B)</td></tr>
<tr><td colspan="3">Spreading after rain stops</td></tr>
<tr><td colspan="3">Spreading before frost and after rain stops (see note C)</td></tr>
<tr><td colspan="2">Spreading before frost</td><td>Monitor weather conditions</td></tr>
<tr><td>Expected snow</td><td colspan="3">Spreading before snow</td></tr>
<tr><td rowspan="3">Freezing Rain</td><td colspan="3">Spreading before rainfall (see note C)</td></tr>
<tr><td colspan="3">Spreading during rainfall (see note C)</td></tr>
<tr><td colspan="3">Spreading after rainfall (see note C)</td></tr>
<tr><td colspan="4">The decision to undertake precautionary treatments should, if appropriate, be adjusted to take account of residual salt or surface moisture.
All decisions should be evidence based, recorded and require continuous monitoring and review.</td></tr>
</table>

Note A. Particular attention should be given to any possibility of water running across carriageways and such locations should be monitored and treated as required.
Note B. When a weather warning contains reference to expected hoarfrost considerable deposits of frost are likely to occur and close monitoring will be required. Particular attention should be given to the timing of precautionary treatments due to the possibility that salt deposited on a dry road may be dispersed before it can become effective.
Note C. Under these circumstances rain will freeze on contact with running surfaces and full pre-treatment should be provided even on dry roads. This is a most serious condition and should be monitored closely and continuously throughout the danger period.

Forecast Weather and Road Conditions Status Codes and Treatment Rates

Table 7.2.K.2 sets out the spread rates for precautionary treatments. Rate of spread for precautionary treatments may be adjusted to take account of residual salt or surface moisture unless stated otherwise.

A road is considered to be only damp when water is present that clearly darkens the road surface, but there is no spray or water flowing across the surface. A wet road is one where minimal spray is evident and there is no water flowing across the surface and no drops of water are formed by trafficking. A very wet road is one where trafficking causes drops of water to form in the air; higher spread rates are required for very wet roads or successive treatments are needed.

National research has shown that salt spreading equipment may be delivering more or less than the targeted salt spread rates within the traffic Lanes. The research has also shown that residual salt levels reduce remarkably during the initial 12 hours after distribution regardless of whether dry, treated or pre-wetted salting techniques are employed.

Protection is only achieved when salt is fully dissolved before forecast conditions occur and treatments should be timed to take account of this.

Spread rates for pre-wetted salt are the combined weight of dry rock salt and brine combined at 70:30 proportion by weight respectively with a maximum brine concentration of 23 percent salt.

Treatments should be carried out, wherever possible after traffic has dispersed standing water. The rates in the table below are for precautionary salt treatment prior to snowfall which is essential to form a de-bonding layer and snow clearance.

Operational experience has indicated that thin surfacing courses do not benefit from an increase in dosage above that required for hot rolled asphalt but that the effect of residual salt on the carriageway is reduced particularly in areas of low traffic, and as such treatment can be applied more frequently. Treatment of thin surface courses should be treated with caution: residual salt should not be relied upon to provide protection: and if there is any hint of moisture being present a pessimistic view of the forecast should be taken.

Table 7.2.K.2 – Spreading Rates for Precautionary Treatments Matrix

Spreading Rates for Precautionary Treatments Matrix		
Road Surface Condition	Frost Susceptible/surface water run-off area (grammes/square metre)	Road Surface Wet (grammes/square metre)
A. RST higher than plus 1°C	*0*	*0*
B. RST lower than or equal to plus 1°C but higher than minus 2°C	*10 to 20*	*10 to 20*
C. RST lower than or equal to minus 2°C but higher than minus 5°C	*10 to 20*	*10 to 20*
D. RST lower than or equal to minus 5°C	*20*	*20*
E. RST lower than or equal to plus 1°C but higher than minus 2°C following rain	*20*	*30*
F. RST lower than or equal to minus 2°C but higher than minus 5°C following rain	*30*	*40*
G. RST lower than or equal to minus 5°C following rain (see note B)	*40*	*40*
H. Hoar Frost	*20*	*20*
I. Freezing Fog	*10*	*20*
J. Freezing Rain	*40 (See Table 7.2.K.1)*	*40 (See Table 7.2.K.1)*
K. Snow Accumulations up to 30mm	*30*	*40*
L. Snow Accumulations over 30mm	*40*	*40*
M. Hard Packed Snow/Ice	*See Table 7.2.K.4*	*See Table 7.2.K.4*
Note A. "RST" means road surface temperature. Note B. Refer also to paragraph 5.4 of this Part.		

Table 7.2.K.3 –Precautionary Treatment Potassium Acetate Spreading Rates

ROAD SURFACE CONDITION	SPREADING RATE (litres/square metres)
Road surface temperature lower than or equal to plus 1°C but higher than minus 2°C	0.0156
Road surface temperature lower than or equal to minus 2°C but higher than minus 5°C	0.0312
Frost and road surface temperature lower than -5°C	a minimum of 0.0312 which should be increased with manufacturer's recommendations
Snow	
Freezing conditions after rain	

Table 7.2.K.4 –Spreading Rates for Snow or Ice Clearance Matrix

Clearance Matrix					
Spreading Rates for Snow or Ice					
Road Surface Condition	Treatment				
	Spreading (grammes/square metre)	Ploughing	Blowing	Alternative De-icer	Ice Breaker
Ice Formed	20 to 40	No	No	Where applicable	No
Snow covering of less than 30mm	20	Yes	No	No	No
Snow covering exceeds 30mm	20 to 40	Yes	No	No	No
Snow accumulations due to prolonged snowfall	20 to 40	Yes (continuous)	Where applicable	No	No
Hard packed snow/ice less than 20mm thick	20 to 40 (successive treatments)	No	No	Yes	Where applicable
Hard packed snow/ice	salt/abrasive (successive treatments)	No	No	Yes	Yes

This is Annex 7.2/L to Schedule 7 Part 2 referred to in the foregoing Agreement between Scottish Ministers and Amey LG Limited.

SCOTTISH MINISTERS' REQUIREMENTS

SCHEDULE 7 PART 2

WINTER SERVICE

ANNEX 7.2/L – Salt Stock Monitoring Report

SCOTTISH MINISTERS' REQUIREMENTS

SCHEDULE 7 PART 2

WINTER SERVICE

ANNEX 7.2/L – Salt Stock Monitoring Report

Operating Company	Reporting Month
Salt used during reporting period	
Actual salt stocks held at the end of the reporting period	
Salt orders placed and deliveries received during reporting period	
Salt orders expected during next reporting period (include imports, dates deliveries expected & tonnage expected)	
Forecast usage during next reporting period	
Any other items to report (such as reduced treatment networks, any notable arrangements with local authorities, etc.)	

SCOTTISH MINISTERS' REQUIREMENTS

SCHEDULE 7 PART 3

INCIDENT RESPONSE

CONTENTS **Page No.**

1.	**INTRODUCTION**	**1**
1.1	General	1
1.2	Incident Response Services	2
1.3	Multi Agency Response Team	2
2.	**CLASSIFICATION OF INCIDENTS**	**3**
2.1	Major Incidents	3
2.2	Critical Incidents	3
2.3	Minor Incidents	4
3.	**DISRUPTION RISK MANAGEMENT PLAN**	**4**
3.1	General	4
3.2	Disruption Risk Management Plan	5
4.	**INCIDENT RESPONSE PLAN**	**6**
4.1	General	6
4.2	Scope of the Incident Response Plan	6
4.3	Liaison Arrangements	8
4.4	Coordination with other Incident Responders	9
4.5	Review of the Incident Response Plan	9
4.6	Amendments to Incident Response Plan	9
4.7	Incident Response Resource Classification	9
4.8	The Incident Liaison Officers	10
4.9	Arrangements for Full-Time Cover	11
4.10	Contact Arrangements	12
4.11	Resource Mobilisation and Deployment	12
4.12	Offices and Depots	12
4.13	Operating Company's Incident Communications	12
5.	**INCIDENT RESPONSE OPERATIONS**	**13**
5.1	Core and Ordered Incident Response Operations	13
5.2	Scope of Incident Response Operations	13
5.3	Standard Incident Diversion Routes	14
6.	**TRUNK ROAD INCIDENT SUPPORT SERVICE**	**15**
6.1	General	15
6.2	Primary and Secondary Functions of Trunk Road Incident Support Service	15
6.3	Hours of Operations	16
6.4	Geographical Coverage and Response Times	16
6.5	Resource Requirements, Competence and Training	17
6.6	Vehicle and Equipment	18
6.7	Airwave Communications	19
6.8	The Trunk Road Incident Support Service Plan	19

6.9	Communication with the Traffic Scotland National Control Centre	20
7.	**INCIDENT SUPPORT UNITS**	**20**
7.1	General	20
7.2	Primary and Secondary Functions of the Incident Support Units	20
7.3	Resource Requirements, Competence and Training	21
7.4	Vehicles and Equipment	23
7.5	Incident Support Units Plan	23
7.6	Reporting to the Incident Liaison Officers	24
8.	**VEHICLE RECOVERY SERVICE**	**24**
8.1	General	24
8.2	Primary Function of the Vehicle Recovery Service	24
8.3	Hours of Operation	24
8.4	Response Times	25
8.5	Resource Requirements, Competence and Training	25
8.6	Vehicles	26
8.7	Radio Communications	26
8.8	Vehicle Recovery Service Plan	26
8.9	Reporting to the Incident Liaison Officers	27
9.	**PARTICULAR REQUIREMENTS IN RESPECT OF FOOTPATH AND CYCLE TRACK CLOSURE ON THE FORTH ROAD BRIDGE DURING SEVERE WEATHER**	**27**
9.1	General	27
10.	**PARTICULAR REQUIREMENTS IN RESPECT OF SPILLAGE AND DEPOSIT OF HAZARDOUS OR SENSITIVE MATERIAL**	**27**
10.1	General	27
11.	**PARTICULAR REQUIREMENTS IN RESPECT OF STRUCTURES**	**28**
11.1	General	28
12.	**REPORTING OF INCIDENTS**	**29**
12.1	Critical and Major Incidents	29
12.2	Minor Incidents	30
12.3	Road Traffic Incidents Involving Fatalities	30
13.	**POST INCIDENT DEBRIEFING**	**31**
13.1	General	31
14.	**INCIDENT DATA**	**31**
14.1	General	31

ANNEX 7.3/A – Notification of Incidents **34**

ANNEX 7.3/B – Designated Trunk Road Incident Support Service Routes **37**

ANNEX 7.3/C – Daily Record Sheet **41**

ANNEX 7.3/D – Fatal Accident Notification **47**

ANNEX 7.3/F – Vehicle Recovery Service – Breakdown Statistics 57

SCOTTISH MINISTERS' REQUIREMENTS

SCHEDULE 7 PART 3

INCIDENT RESPONSE

1. INTRODUCTION

1.1 General

1.1.1 This Part identifies the requirements for the Operating Company in relation to:

(i) planning its Incident Response Operations for Incidents,

(ii) executing its Incident Response Operations,

(iii) minimising the duration of Incidents, including the impact that any Incidents may have on the operation of the Unit, and

(iv) identifying and executing mitigating actions to prevent the occurrence of Incidents.

1.1.2 The Operating Company shall attend to all Incidents in a prompt and efficient manner through the planned and coordinated use of the Incident Response Resources.

1.1.3 The Operating Company's planning activities for Incident Response shall include as a minimum the development and use of management plans, processes and systems. The Operating Company shall undertake such activities to enhance its capability to deliver the response to, and minimise the duration of, Incidents.

1.1.4 The Incident Response Operations shall commence immediately after the Operating Company has been notified of an Incident. Such Operations shall include as a minimum:

(i) responding to all Incidents within the response times stated in the Specification,

(ii) providing sufficient Incident Response Resources undertaking repair work within the Unit to restore safe access and use of the Trunk Road for all users, and

(iii) undertaking recovery Operations to restore the Unit to normal operation.

The Operating Company shall undertake the Incident Response planning and Incident Response Operations in accordance with the Incident Response Plan. This plan shall be prepared and maintained by the Operating Company as stated in paragraph 4 of this Part.

1.1.5 The Operating Company's Incident mitigation activities shall be carried out in such a manner as minimises or, where practicable eliminates, the risks associated with Incidents. Such mitigation activities shall include as a minimum disruption risk management activities relating to Incidents. The Operating Company shall undertake such activities in accordance with the Disruption Risk Management Plan as such plan shall be prepared and maintained by the Operating Company as stated in paragraph 3 of this Part.

1.1.6 The Operating Company shall ensure that all staff involved in Incident Response Operations are suitably trained and its vehicles are sufficiently equipped to deal with all Incidents.

1.2 Incident Response Services

1.2.1 The Trunk Road Incident Support Service and Incident Support Units shall attend to all Incidents in accordance with the response times stated in the Specification.

1.2.2 The Operating Company's Vehicle Recovery Service shall attend all breakdowns on the Forth Road Bridge from Commencement of Service Date 1 and additionally on the Queensferry Crossing from Commencement of Service Date 2 in accordance with the response times stated in the Specification.

1.3 Multi Agency Response Team

1.3.1 "Multi Agency Response Team" means the team comprising partner organisations working with Transport Scotland in the deployment of resources to manage Incidents or events that are deemed in the first instance by the Director to:

(i) have a high risk of severe disruption to road or rail journeys with potential safety risks for the travelling public,

(ii) have a significant potential impact for large parts of the strategic transport network, and

(iii) require a multi agency response.

1.3.2 The need to deploy the Multi Agency Response Team will be decided upon by the Director in dialogue with the Multi Agency Response Team. The decision making will be based on professional judgement and use the best intelligence available to the group. Participation by and deployment of the Multi Agency Response Team will be proportionate and defined by the nature, scale and potential impact of the Incident or event.

1.3.3 The Operating Company shall maintain a list of suitably trained staff who are able to work in the Multi Agency Response Team when it is in operation. These nominated individuals shall be available at short notice, able to attend the Traffic Scotland National Control Centre when required and have a full understanding of the objectives of the Multi Agency Response Team and their role in its operation. Such staff must be available to attend any training events that may be organised in relation to Multi Agency Response Team operations.

1.3.4 No later than 30 Days prior to Commencement of Service Date 1, the Operating Company shall produce and thereafter maintain up to date until the Service End Date its own Multi Agency Response Team information folder which shall contain key information such as contacts, record logs and the like and which shall be handed over at each shift change when the Multi Agency Response Team is in operation. This information folder will remain available for inspection by others throughout the Contract Period.

1.3.5 The Multi Agency Response Team partner organisations will vary over the Contract Period and are likely to include:

(i) Transport Scotland,

(ii) the Traffic Scotland Operations and Infrastructure Services Contractor,

(iii) other operating companies,

(iv) Network Rail,

(v) First Scotrail,

(vi) the Meteorological Office, and

(vii) Police Scotland.

2. CLASSIFICATION OF INCIDENTS

2.1 Major Incidents

2.1.1 "Major Incident" means any unplanned event that requires the implementation of special arrangements by one or more of the Category 1 responders in accordance with the requirements of the Civil Contingencies Act 2004 and the Civil Contingencies Act 2004 (Contingency Planning) (Scotland) Regulations 2005 for:

(i) the rescue and transport of a large number of casualties,

(ii) the involvement, either directly or indirectly, of large numbers of people,

(iii) the handling of a large number of enquiries likely to be generated both from the public and the news media, usually to the police,

(iv) the large scale combined resources of the Category 1 responders to cater for the threat of death, serious injury or homelessness to a large number of people, or

(v) “Category 1 responders” has the meaning given to it in the *Civil Contingencies Act 2004.*

2.1.2 The police and other Category 1 responders are responsible for declaring a Major Incident and shall immediately notify the Director and the Traffic Scotland Operations and Infrastructure Services Contractor when a Major Incident has been declared.

2.1.3 When requested by the Director, the Operating Company shall support Category 1 responders with dealing with Major Incidents.

2.2 Critical Incidents

2.2.1 "Critical Incident" means any unplanned event that includes any one or more of the following:

(i) any Incidents and Severe Weather events that result in significant disruption to the operation of the Unit,

(ii) road traffic accidents on a Trunk Road involving fatalities, serious injuries, or dangerous substances,

(iii) partial or full closure of a Trunk Road due to weather or road conditions,

(iv) road traffic accidents involving crossover of a vehicle from one carriageway of a Trunk Road to another,

(v) road traffic accidents on a Trunk Road resulting in serious or potentially serious damage to a Structure necessitating road closures,

(vi) any Incidents causing full or partial closures of a Trunk Road due to road traffic accidents, equipment failure, security alerts of criminal or terrorist activities or any other significant event,

(vii) any Incident of public sensitivity,

(viii) Incidents resulting in damage to the infrastructure of the Unit,

(ix) environmental Incidents of significant importance, and

(x) any Incident not on the Trunk Road that meets any of the above criteria and which may affect the Trunk Road.

2.2.2 The Operating Company shall declare an Incident to be a Critical Incident for its own and the Director's management purposes.

2.2.3 The Operating Company's notification requirements for Critical Incidents are stated in Annex 7.3/A of this Part.

2.2.4 Where the Operating Company considers Critical Incidents to have escalated, or are likely to escalate, to a Major Incident, the Operating Company shall undertake the notification requirements for Critical Incidents as stated in Annex 7.3/A of this Part.

2.3 Minor Incidents

2.3.1 "Minor Incident" means any unplanned event on the Unit that is not considered by the Operating Company to be a Major Incident or a Critical Incident.

2.3.2 The Operating Company shall declare an Incident to be a Minor Incident for its own and the Director's management purposes.

2.3.3 The Operating Company's notification requirements for Minor Incidents are stated in Annex 7.3/A of this Part.

2.3.4 The Director will change the classification of a Minor Incident to Critical Incident where other information that is available to the Director indicates that such a classification change is required.

2.3.5 Where the Operating Company considers Minor Incidents to have escalated, or are likely to escalate, to a Critical Incident, the Operating Company shall immediately undertake the notification requirements for Critical Incidents as stated in Annex 7.3/A of this Part.

3. DISRUPTION RISK MANAGEMENT PLAN

3.1 General

3.1.1 Disruption risk management shall refer to the activities undertaken by the Operating Company that are aimed at improving journey time reliability by minimising or eliminating the risk of unplanned disruption to the operation of the Unit. The Operating Company shall develop and implement its disruption risk management activities in accordance with Transport Scotland's *Manual for the Management of the Risk of Unplanned Network Disruption* to:

(i) collect, store and analyse data on Incidents to identify locations on the Unit with a pattern of, or potential for, disruption Incidents,

(ii) undertake a risk assessment at each Disruption Risk Site using a standard approach to be provided by the Director to identify Disruption Risk Sites with high and very high risk level,

(iii) develop and submit a Statement of Intent, for consent by the Director, for appropriate risk management actions at Disruption Risk Sites identified as having a high and very high risk level. Such actions include as a minimum capital investment projects, development and implementation of a management plan and further investigation of specific Disruption Risk Sites, and

(iv) when consented to by the Director, implement approved risk management actions where a bid for funding has been successful.

3.1.2 The Disruption Risk Management Plan for the Unit shall contain details of its arrangements for implementing its disruption risk management activities.

3.2 Disruption Risk Management Plan

3.2.1 The Disruption Risk Management Plan shall combine the details and requirements of other management plans and Records required by this Contract that contribute to the management of disruption risk. Such Records and plans shall include as a minimum:

(i) the Incident Response Plan,

(ii) the Winter Service Plan,

(iii) the Trunk Road Incident Support Service plan,

(iv) the Incident Support Unit plan,

(v) the Standard Incident Diversion Routes,

(vi) the wind management plans,

(vii) the flooding management plans,

(viii) the landslide management plans,

(ix) the Vehicle Recovery Service plan,

(x) disruption risk Records,

(xi) Disruption Risk Sites,

(xii) the Statement of Intent requests for risk management action, and

(xiii) any other management plans and risk records related to potential disruption risk.

3.2.2 No less than 30 days prior to Commencement of Service Date 1, the Operating Company shall submit to the Director for his written consent, a draft Disruption Risk Management Plan (which shall include all the plans listed at paragraph 3.2.1 of this Part) covering the full extent of the Unit and shall update the said Plan to take account of Network 2 and submit it to the Director for his written consent no less than 30 days prior to Commencement of Service Date 2. The Disruption Risk Management Plan shall be developed in accordance with Transport Scotland's *Manual for the Management of the Risk of Unplanned Network Disruption* and shall

include where relevant all historic data supplied by the Director and shall be continuously maintained, updated and improved by the Operating Company.

3.2.3 The Operating Company shall update the Disruption Risk Management Plan and re-issue it to the Director for consent, or issue a statement that the plan has been reviewed and that no update is required no later than 10 Working days prior to the end of each Annual Period.

4. INCIDENT RESPONSE PLAN

4.1 General

4.1.1 No less than 30 days prior to Commencement of Service Date 1, the Operating Company shall submit an Incident Response Plan to the Director for his written consent and shall update the said Plan to take account of Network 2 and submit it to the Director for his written consent no less than 30 days prior to Commencement of Service Date 2.

4.2 Scope of the Incident Response Plan

4.2.1 The Incident Response Plan shall ensure a prompt and efficient response to Incidents including as a minimum:

(i) road traffic collisions,

(ii) vehicle breakdown,

(iii) deposit and spillage of debris, waste or animal carcasses,

(iv) damaged infrastructure on the Unit,

(v) flooding and scour of roads and Structures,

(vi) Incidents other than vehicle damage that put Structures at risk,

(vii) spillage of fuels, chemicals, noxious substances, body fluids and other sensitive material,

(viii) landslides and rock falls,

(ix) subsidence,

(x) damaged electrical apparatus including where live elements may be exposed,

(xi) Severe Weather events affecting any part of the Unit excluding the clearance of ice and snow in accordance with the Winter Service Plan, and

(xii) any other circumstances involving an Incident.

4.2.2 The Incident Response Plan shall demonstrate the adequacy and availability of the Incident Response Resources and arrangements to implement all necessary Incident Response Operations and meet the response times referred to in the Specification.

4.2.3 The Incident Response Plan shall include as a minimum the:

(i) management arrangements including the named resources of the Operating Company and other relevant organisations,

(ii) management arrangements to ensure the provision of out of hours Incident Response as referred to in the Specification,

(iii) management communication and instruction arrangements to provide the response referred to in this Part,

(iv) arrangements for notifying the Emergency Services of the contact details for the Incident Liaison Officers,

(v) arrangements with operating companies in other units for the use of additional Incident Response Resources in exceptional circumstances,

(vi) communication methods including as a minimum a dedicated direct telephone number available to the Emergency Services to contact the Operating Company and the Operating Company's method of informing the Emergency Services of the direct telephone number and any changes to it,

(vii) communication resilience arrangements for ensuring availability of communications in the event of failure of electricity supplies, mobile telephone services and landline telephone services, radio communication services, or any other service on which the Incident Response Operations depend,

(viii) arrangements for collaborative working with the Traffic Scotland Operations and Infrastructure Services Contractor, such including as a minimum co ordinating the management, maintenance and operation of Traffic Scotland Equipment on the Principal Crossings,

(ix) communication between Operating Company vehicles, offices, depots, sites of Incidents, Emergency Services and other Operational Partners,

(x) when and as required by the Director, arrangements for attending, participating and supporting Transport Scotland’s Incident management forum,

(xi) availability of Operating Company and other resources and their locations, supply chain management arrangements, emergency contact details and mobilisation arrangements for labour, plant, and materials to implement all potential Incident Response Operations,

(xii) management arrangements for Incidents other than vehicle damage that put Structures at risk,

(xiii) arrangements for the provision of Mutual Aid,

(xiv) management arrangements for the availability of the Incident Liaison Officers both during and outwith Normal Working Hours,

(xv) arrangements for post Incident debriefing and reporting to the Director of Critical or Major Incidents, Incidents involving spillage or deposit of hazardous or sensitive materials, Incidents involving Structures and any Incident where the requirements of this Contract have not been met,

(xvi) arrangements for liaison with all appropriate organisations referred to in this Part,

(xvii) arrangements for coordination with other Category 1 responders referred to in this Part,

(xviii) arrangements for dealing with spillage and deposit of hazardous or sensitive material referred to in this Part,

(xix) arrangements for dealing with Structures including unsafe or potentially unsafe Structures referred to in this Part,

(xx) arrangements for dealing with suicides or potential suicides,

(xxi) arrangements for dealing with bomb warnings/threats,

(xxii) arrangement for dealing with footway/cycle track closures on the Forth Road Bridge from Commencement of Service Date 1,

(xxiii) arrangements for dealing with closures on the Forth Road Bridge from Commencement of Service Date 1,

(xxiv) arrangements for dealing with closures on the Queensferry Crossing from Commencement of Service Date 2; this shall include the requirement of being able to open up the Forth Road Bridge to general traffic within 30 minutes of the police requesting such,

(xxv) arrangements for dealing with the closure of both the Forth Road Bridge and the Queensferry Crossing,

(xxvi) arrangements/procedures for dealing with full evacuation of the work force on the Forth Road Bridge from Commencement of Service Date 1 and or the Queensferry Crossing from Commencement of Service Date 2,

(xxvii) arrangements/procedures for dealing with an Incident related evacuation that requires the evacuation of members of the public from the Forth Road Bridge from Commencement of Service Date 1 and or the Queensferry Crossing from Commencement of Service Date 2 that clearly demarcates responsibilities between the police and Operating Company staff,

(xxviii) the management process for obtaining specialist advice to determine the safety and stability of damaged or at risk Structures and the Design for temporary work, remedial and strengthening measures for Structures, and

(xxix) arrangements for complying with the liaison requirements of Schedule 3 Part 7.

4.3 Liaison Arrangements

4.3.1 In developing its Incident Response Plan, the Operating Company shall:

4.3.2 Identify all relevant Operational Partners that have involvement in dealing with an Incident:

(i) agree the communication arrangements between itself and the relevant Operational Partners in the event of an Incident, and

(ii) ensure mutual understanding of the roles and responsibilities of the Operating Company and the relevant Operational Partners in the event of an Incident.

Details of all relevant Operational Partners, the agreed communication arrangements and the roles and responsibilities for dealing with Incidents shall be incorporated within the Incident Response Plan.

4.3.3 The Operating Company shall maintain close working relationships with all relevant Operational Partners through regular meetings to review and update the communication arrangements and enable the integration of communication systems and technology.

4.3.4 The Emergency Services, in conjunction with local authorities and central government departments, undertake regular contingency planning and Incident planning meetings and conduct contingency and Incident exercises. The Operating Company shall participate in all meetings and exercises to which it is invited by such parties, including meetings of all local contingency planning forums whose areas cover any part of the Unit.

4.4 Coordination with other Incident Responders

4.4.1 The Operating Company shall ensure all Emergency Services, Statutory Authorities, and other appropriate Operational Partners are advised of its arrangements for initiating Incident Response Operations.

4.4.2 The Operating Company shall provide all relevant Operational Partners with one Electronic Copy and paper copy of its current Incident Response Plan.

4.5 Review of the Incident Response Plan

4.5.1 The Operating Company shall keep the Incident Response Plan under continuous review and at intervals of no more than three months:

(i) update and re-issue such plan to the Director for consent, or

(ii) issue a statement to the Director declaring that the plan has been reviewed and that no update is required.

4.5.2 The continuous review shall include the adequacy and availability of the Incident Response Resources to implement all necessary Incident Response Operations, and where required, proposed changes to the arrangements identified through Incident de-briefings. The Operating Company's review procedures shall also ensure the accuracy of contact details is maintained.

4.6 Amendments to Incident Response Plan

4.6.1 The Operating Company shall not make amendments to the arrangements set out in the Incident Response Plan without the prior written consent of the Director, with the exception of changes to contact details.

4.6.2 When consented to by the Director, or when there is a change to contact details, the Operating Company shall immediately notify any amendments and or changes to the Incident Response Plan to all holders of copies of the plan and shall provide an Electronic Copy and a paper copy of the amendment and or change within one Working Day.

4.7 Incident Response Resource Classification

4.7.1 Incident Response Resources shall be classified, as initial, secondary or back-up Incident Response Resources.

4.7.2 The Operating Company shall ensure that:

(i) initial and secondary Incident Response Resources are available during and outwith Normal Working Hours to comply with the response times for attendance at an Incident as stated in the Specification, and

(ii) arrangements are established such that the Operating Company can deliver the back-up Incident Response Resources to the site of the Incident as soon as possible and no later than 24 hours from the time when the need for the back-up Incident Response Resources has been identified.

4.7.3 The Incident Response Resources identified in the Specification are the minimum provision and shall not be construed as being all the resources required by the Operating Company to fulfil its obligations for Incident Response Operations.

4.8 The Incident Liaison Officers

4.8.1 The Operating Company shall appoint suitably qualified personnel to undertake the role of Incident Liaison Officers in accordance with the requirements of Schedule 5 Part 4. No later than 30 days prior to Commencement of Service Date 1, the Operating Company shall notify in writing to the Director the names, contact information and back up mobile telephone contact numbers for all Incident Liaison Officers. The Operating Company shall include details of the cover arrangements during periods of absences or unavailability.

4.8.2 The Incident Liaison Officers shall be responsible for the management and delivery of the Incident Response Operations and shall have the information and the authority to provide an Incident Response. The Incident Liaison Officer shall be available during and outwith Normal Working Hours and be based within the Operating Company’s office(s).

4.8.3 The Incident Liaison Officers shall act as the first point of contact within the Operating Company's organisation for all Incidents. When requested by the Director, the Incident Liaison Officers shall undertake duties from the Traffic Scotland National Control Centre.

4.8.4 The Incident Liaison Officers shall be available to receive notification of an Incident from:

(i) the Traffic Customer Care Line Operator,

(ii) the Emergency Services,

(iii) the Traffic Scotland Operations and Infrastructure Services Contractor,

(iv) local authorities,

(v) the public,

(vi) the Operating Company's personnel, and

(vii) any other sources.

4.8.5 The duties of the Incident Liaison Officers include as a minimum:

(i) notifying all parties, including as a minimum the Emergency Services, the Traffic Scotland Operations and Infrastructure Services Contractor and the Director of Incidents in accordance with the requirements specified in Annex 7.3/A of this Part,

(ii) mobilising the initial Incident Response Resources,

(iii) maintaining contact with and keeping informed the Emergency Services, the Traffic Scotland Operations and Infrastructure Services Contractor, local authorities and other affected parties as necessary during the Incident,

(iv) managing and coordinating the Incident Response,

(v) managing the Trunk Road Incident Support Service to meet the requirements of this Part,

(vi) managing the Vehicle Recovery Service to meet the requirements of this Part,

(vii) when necessary, providing the required support to the Emergency Services,

(viii) determining the need for secondary and back-up Incident Response and mobilising where necessary,

(ix) subject to an Order, the provision of Mutual Aid,

(x) determining the need for obtaining specialist advice from the Bridges Manager and making contact as appropriate,

(xi) ensuring all Standard Incident Diversion Routes are reviewed prior to Commencement of Service Date 1 and again prior to Commencement of Service Date 2,

(xii) the review and update of existing Standard Incident Diversion Routes in full consultation with relevant Operational Partners,

(xiii) developing new Standard Incident Diversion Routes in accordance with Transport Scotland's *Development Procedures for Operating Companies*,

(xiv) making an initial assessment as to whether the Incident is already, or has the potential to escalate to, a Critical or Major Incident,

(xv) preparing Incident reports for submission to the Director in accordance with requirements of this Part,

(xvi) attending Incident debriefs and supporting Transport Scotland's Incident management forum,

(xvii) being trained in all aspects of Incident management and taking a proactive role in planning resources so that Incidents are cleared up at the earliest opportunity, and

(xviii) actively planning for getting the relevant part of the Unit open at the earliest opportunity in the instance of a road closure by consulting with the relevant parties at the scene of the Incident.

4.8.6 The Operating Company shall provide all necessary resources needed by the Incident Liaison Officers to coordinate, mobilise, deploy and supervise Incident Response Resources and Incident Response Operations.

4.9 Arrangements for Full-Time Cover

4.9.1 Incident Response Resources shall be available both during and outwith Normal Working Hours from the Commencement of Service Date 1 to the Service End Date.

4.9.2 The Operating Company shall prepare rotas of trained operatives able to attend Incidents and implement appropriate measures or actions. The Operating Company

shall prepare such rotas at least 30 days prior to Commencement of Service Date 1 and thereafter at least 10 Working Days prior to 1 April and 1 October in each Annual Period and at least 30 days prior to Commencement of Service Date 2. The rotas shall detail the availability of the Incident Liaison Officers and Incident Response personnel for each six month period commencing 1 April and 1 October in each Annual Period. Such rotas shall be issued to the Director and all relevant Operational Partners.

The rotas shall include a list of named Operating Company staff with relevant contact information including line management details. The rotas shall be updated when the staff identified on the rotas cease to be available or when changes are proposed by the Operating Company. The Director and all relevant Operational Partners shall be notified immediately of any changes to issued rotas.

4.9.3 The Operating Company shall train and supervise all personnel who may be involved in any aspect of Incident Response to ensure they are familiar with the types of Incident that may occur including as a minimum any special procedures to be followed outwith Normal Working Hours.

4.10 Contact Arrangements

4.10.1 The Operating Company's Incident Response personnel shall be contactable both during and outwith Normal Working Hours throughout the duration of each Annual Period.

4.11 Resource Mobilisation and Deployment

4.11.1 For all Incidents the Incident Liaison Officers shall mobilise and deploy:

(i) initial Incident Response Resources as soon as possible to meet the response times stated in the Specification,

(ii) secondary Incident Response Resources as soon as possible to meet the response times stated in the Specification whenever the need for them is identified, and

(iii) back-up Incident Response Resources as soon as possible and no later than 24 hours from when the need for them is identified.

4.12 Offices and Depots

4.12.1 The Operating Company shall make available offices and depots as stated in Schedule 5 Part 7 and in the Specification to provide support for Incident Response.

4.13 Operating Company's Incident Communications

4.13.1 The Operating Company shall ensure that communication is maintained with other Operational Partners at all times.

4.13.2 Within 10 minutes of receipt of information relating to an Incident, the Operating Company shall disseminate such information to relevant Operational Partners.

5. INCIDENT RESPONSE OPERATIONS

5.1 Core and Ordered Incident Response Operations

5.1.1 The Operating Company shall undertake Incident Response Operations where the value of the Incident Response Operations at each Incident is less than or equal to £10,000.

5.1.2 The Operating Company shall undertake Incident Response Operations where the value of the Incident Response Operations at each Incident is above £10,000. Such Incident Response Operations shall be subject to an Order issued retrospectively.

5.2 Scope of Incident Response Operations

5.2.1 Incident Response Operations include as a minimum:

(i) providing assistance to the Emergency Services,

(ii) traffic management for hard shoulder closures, closures of Lanes , road closures and other closures instructed within the carriageway,

(iii) arranging for and implementing traffic diversions including those necessary for carriageways, footways, cycleways and rights of way,

(iv) making safe and protecting any part of the Unit infrastructure,

(v) making safe and protecting infrastructure located on or adjacent to the Unit that is not the property of the Scottish Ministers and arranging with the owner of such infrastructure for its repair or replacement,

(vi) making safe, protecting and when necessary removing unsafe and fallen trees and branches,

(vii) cleaning and sweeping,

(viii) removal and disposal of general debris, animal carcasses and other obstructions in the road,

(ix) containment, removal and disposal of debris and waste including as a minimum chemicals, noxious substances, body fluids and other hazardous and sensitive material,

(x) repairing and replacing any part of the Trunk Road infrastructure where necessary or where otherwise determined by the Director for a particular Incident as part of the Incident Response Operations,

(xi) alleviating and averting flooding,

(xii) checking and making safe any electrical apparatus involved in an Incident,

(xiii) where required, the initial assessment of a Structure involved in an Incident to determine its continued safe use,

(xiv) lifting and propping bridges, other Structures and other parts of the Trunk Road infrastructure,

(xv) over-spanning bridge decks, supports at bridges and other Structures that are unsafe due to failure or are damaged due to any cause and, where possible, enabling such bridges and Structures to remain in service,

(xvi) removal and disposal of debris arising from landslides and rock falls,

(xvii) dealing with subsidence,

(xviii) dealing with Severe Weather events,

(xix) subject to an Order, the provision of Mutual Aid, and

(xx) providing regular Incident status updates to relevant Operational Partners in addition to complying with the liaison requirements of Schedule 3 Part 7.

5.3 Standard Incident Diversion Routes

5.3.1 The Operating Company shall manage and implement all existing Standard Incident Diversion Routes and related Incident Response Operations.

5.3.2 The Operating Company shall ensure that signing on all diversion routes is installed to current standards and is maintained as required throughout the period of the Incident. At the conclusion of the Incident, all such signing shall be immediately removed and returned to storage.

5.3.3 The Operating Company will consider the effectiveness of each Standard Incident Diversion Route after each operational use and will advise the Director of any changes or improvements that may be required.

5.3.4 The Operating Company shall undertake a review of all Standard incident Diversion Routes 30 days prior to each of Commencement of Service Date 1 and Commencement of Service Date 2 and shall in addition undertake an annual review in each Annual Period to confirm suitability and identify any changes or potential improvements. This review must be of suitable rigour to ensure that any changes that may be detrimental to the operation of the route are identified, ensure that the route remains suitable to all classes of vehicle and confirm that signing remains adequate. This may require a driven survey of some or all routes. The review will be submitted to the Director for his written consent.

5.3.5 Amendments to a Standard Incident Diversion Route shall be subject to an Order, and the Operating Company shall make all changes or improvements in full consultation with relevant Operational Partners.

5.3.6 Where the Operating Company is instructed in accordance with paragraph 5.3.5 of this Part to make amendments or improvements to any Standard Incident Diversion Routes, it shall:

(i) produce revised documentation in both hard copy and an Electronic Copy,

(ii) maintain Records of amendments and distribution, and

(iii) submit final documentation to the Director for approval and distribution via the Traffic Scotland Operations and Infrastructure Services Contractor.

5.3.7 Where a Standard Incident Diversion Route is unavailable for implementation when required, the Operating Company shall liaise with appropriate Emergency Services and appropriate Operational Partners to implement a suitable alternative diversion route where available.

6. TRUNK ROAD INCIDENT SUPPORT SERVICE

6.1 General

6.1.1 The Trunk Road Incident Support Service shall be integrated with the Traffic Scotland Control National Centre as stated in this Part.

6.1.2 The Trunk Road Incident Support Service shall be fully operational from Commencement of Service Date 1.

6.1.3 The Traffic Scotland Operations and Infrastructure Services Contractor will coordinate and control the dispatch of the Trunk Road Incident Support Service, including the dispatching of Trunk Road Incident Support Service resources to respond to Incidents and the real time monitoring of the location and deployment status of all Trunk Road Incident Support Service vehicles.

6.1.4 The Operating Company shall ensure that all Trunk Road Incident Support Service personnel are appointed only after the Operating Company has completed satisfactorily a disclosure process through Disclosure Scotland as stated in Schedule 3 Part 1.

6.2 Primary and Secondary Functions of Trunk Road Incident Support Service

6.2.1 The primary functions which shall be undertaken by the Operating Company in delivering the Trunk Road Incident Support Service are:

(i) responding to notifications of Incidents received from the Traffic Scotland Operations and Infrastructure Services Contractor. The Operating Company shall also respond to Incidents reported by the police and other Operational Partners after first notifying the Traffic Scotland Operations and Infrastructure Services Contractor,

(ii) making Incidents safe through the application of temporary traffic management,

(iii) relieving congestion and removing hazards by the clearance of debris from Lanes,

(iv) arranging for immediate repairs where the Trunk Road infrastructure is damaged as a result of an Incident,

(v) assessing the scene and securing the attendance of additional or specialist resources where the task is beyond the Trunk Road Incident Support Service team's capabilities,

(vi) providing a communications link between the Site, the Traffic Scotland Operations and Infrastructure Services Contractor and the Operating Company's Incident Liaison Officers, which meets the requirements of the Director,

(vii) reporting abandoned or broken down vehicles to the Operating Company's Incident Liaison Officers,

(viii) offering assistance to broken down vehicles, including assisting in removing them to safe locations and offering fuel,

(ix) providing high visibility patrols on the routes,

(x) monitoring and reporting unusual or unexpected activity, disruption and or congestion on the Unit caused by Incidents and events to the Traffic Scotland Operations and Infrastructure Services Contractor and the Operating Company's Incident Liaison Officers,

(xi) providing Incident Response Operations, to Incidents on all routes,

(xii) liaising with the Traffic Scotland Operations and Infrastructure Services Contractor and police control rooms. Liaison with the police control rooms shall be via the Traffic Scotland Operations and Infrastructure Services Contractor and the Emergency Services at Incidents as required,

(xiii) participating in and contributing to working groups relevant to the Trunk Road Incident Support Service, and

(xiv) Safety Patrols, Safety Inspections and making safe or repairing Category 1 Defects in accordance with the requirements of Schedule 7 Part 1.

6.2.2 Where the Trunk Road Incident Support Service personnel are not engaged with the delivery of its primary functions, the Trunk Road Incident Support Service personnel may undertake the following secondary functions:

(i) Safety Patrols and Safety Inspections, and

(ii) making safe or repairing Category 1 Defects,

in accordance with Schedule 7 Part 1.

6.2.3 The Operating Company shall not utilise the Trunk Road Incident Support Service for other additional secondary functions without the prior consent of the Director.

6.2.4 Due to the high profile and service oriented nature of the Trunk Road Incident Support Service, Trunk Road Incident Support Service personnel shall not engage in any general duties that may compromise the image of the service.

6.3 Hours of Operations

6.3.1 The Trunk Road Incident Support Service shall utilise the Trunk Road Incident Support Service vehicle to patrol designated routes systematically in accordance with the provisions of this Part, as follows:

(i) Vehicle 1 – between 06:30 hours and 18:30 hours, seven days a week.

Shift patterns shall allow for handover time between shifts, appropriate time for breaks and appropriate time for administration tasks at either end of the operational day.

The Director reserves the right to review and change the Trunk Road Incident Support Service patrol route without changing the number of vehicles as stated in this Part.

6.4 Geographical Coverage and Response Times

6.4.1 The Trunk Road Incident Support Service vehicle shall patrol the designated strategic routes detailed in Annex 7.3/B of this Part. The response times for each route or part thereof are stated in the Specification.

6.4.2 Where the Trunk Road Incident Support Service patrol is required to cover a secondary route, the response times for such routes shall be as stated in the Specification.

6.4.3 Where the Trunk Road Incident Support Service patrol is required by the Traffic Scotland Operations and Infrastructure Services Contractor to attend Incidents outwith its designated patrol routes or Unit in order to provide assistance to the police and other Operating Companies, the Trunk Road Incident Support Service patrol shall respond in accordance with the requirements of this Part. The Operating Company shall accommodate trunk road incident support service patrols from other units. Such circumstances shall be recorded and excluded from the relevant Performance Indicators.

6.4.4 Where the Trunk Road Incident Support Service patrol is unable to respond to an Incident, both within and outwith the Unit, the Operating Company shall immediately notify the Traffic Scotland Operations and Infrastructure Services Contractor and Director of such circumstances.

6.5 Resource Requirements, Competence and Training

6.5.1 Sufficient, suitably qualified and experienced personnel shall be available seven days a week, during the hours of operation to undertake the Trunk Road Incident Support Service and maintain the high public profile and integrity of this service. The Trunk Road Incident Support Service shall be provided by a minimum of two personnel in each vehicle.

6.5.2 The Trunk Road Incident Support Service personnel shall possess appropriate qualifications in road maintenance and traffic management.

6.5.3 Prior to Commencement of Service Date 1, all Trunk Road Incident Support Service personnel shall be suitably trained in appropriate areas, including as a minimum:

(i) driver training,

(ii) vehicle and equipment checks and vehicle familiarisation,

(iii) network and route familiarisation,

(iv) understanding of the Trunk Road network,

(v) roles and responsibilities of relevant Operational Partners including as a minimum the Traffic Scotland Operations and Infrastructure Services Contractor, Emergency Services, Trunk Road Incident Support Service, trunk road incident support units of other operating companies Incident Support Units,

(vi) legal responsibilities and powers,

(vii) Airwave,

(viii) emergency traffic management,

(ix) knowledge of hazardous materials,

(x) operational response strategies and scenarios,

(xi) road traffic collisions training ,

(xii) carriageway clearance training,

(xiii) Safety Inspections and Safety Patrols,

(xiv) scene preservation and Incident management,

(xv) broken down and abandoned vehicles – Vehicle Recovery Service,

(xvi) administrative procedures,

(xvii) preparation of health and safety risk assessments and dynamic risk assessments,

(xviii) communication skills,

(xix) first aid,

(xx) conflict resolution, and

(xxi) general maintenance Operations and procedures.

The scope, standards and provision of such training shall be agreed in writing by the Director prior to Commencement of Service Date 1.

6.5.4 The Trunk Road Incident Support Service patrol staff shall participate in joint training exercises with relevant Operational Partners.

6.5.5 Trunk Road Incident Support Service personnel shall carry at all times photographic identification cards provided by the Operating Company, the details of which shall be subject to the written consent of the Director. The cards shall display as a minimum full name, company, position and employee number.

6.5.6 Trunk Road Incident Support Service personnel shall be professionally attired including appropriately badged, uniform style clothing which will be subject to the written consent of the Director in accordance with Appendix 32/1 of the Specification.

6.6 Vehicle and Equipment

6.6.1 The type of vehicle and the equipment to be provided within the vehicle to be provided by the Operating Company shall be as stated in the Specification.

6.6.2 The Trunk Road Incident Support Service vehicle shall have a global positioning system that provides the Incident Liaison Officers with a "live" location and identification facility to enable the effective tasking of resources and monitoring of Operations. The Operating Company shall provide the Traffic Scotland Operations and Infrastructure Services Contractor with a live feed to this data and all necessary supporting information to allow this live feed to be integrated into the Traffic Scotland Service systems.

6.6.3 The Trunk Road Incident Support Service vehicle shall use the Trunk Road Incident Support Service Type 1 vehicle requirements as detailed in the Specification. Any temporary vehicles engaged for the service shall be clearly identified as such by the use of temporary markings complying with the Type 2 vehicle requirements as detailed in the Specification.

6.6.4 The Operating Company shall provide a communications link between the Trunk Road Incident Support Service personnel, the Traffic Scotland Operations and Infrastructure Services Contractor, the police and the Incident Liaison Officers which provides a swift and reliable means for the notification of Incidents.

6.7 Airwave Communications

6.7.1 The Operating Company shall use Airwave for the Trunk Road Incident Support Service vehicle. The Operating Company shall utilise this system as a dedicated communication system between Trunk Road Incident Support Service personnel, the Traffic Scotland National Control Centre, the Incident Liaison Officers and the police.

6.7.2 In order to carry out the services required, the Operating Company shall apply for, acquire and operate a TETRA Encryption Algorithm 2 sub-user licence for use of Airwave and be solely responsible for the procurement of this licence and conforming to any conditions of the licence.

6.7.3 The Operating Company shall comply with all codes of practice that apply to this type of licence. These codes, guidance on the Airwave sharers list and TETRA Encryption Algorithm 2 licensing are available from the Ofcom website at http://licensing.ofcom.org.uk/radiocommunication-licences/business-radio/guidance-for-licensees/airwave-emergency-services/airwave/ or its equivalent.

6.7.4 The Operating Company shall prepare and submit a method statement for the use of Airwave in compliance with *Traffic Scotland Airwave Users Guide/Operating Protocols and Procedures.*

6.7.5 The Operating Company shall indemnify the Director in respect of any claims made against the Scottish Ministers and or Transport Scotland arising as a result of negligence or any other action on the part of the Operating Company or those for whom they are responsible, relating to the use and or, storage of Airwave equipment and the Operating Company's TETRA Encryption Algorithm 2 sub-user licence and or any non-compliance with the codes of practice and method statement.

6.8 The Trunk Road Incident Support Service Plan

6.8.1 The Operating Company shall prepare and submit a Trunk Road Incident Support Service plan to the Director as part of the Incident Response Plan and shall comply with the timescales set out in this Part for production and updating of the Incident Response Plan as if such provisions referred to the Trunk Road Incident Support Service plan.

The Operating Company's procedures and method statements contained within the Management System shall take account of the requirement to work within the public transport corridors on the Unit and cover:

(i) traffic management,

(ii) traffic delay monitoring and reduction,

(iii) assistance in the removal of vehicles and provision of fuel for stranded vehicles,

(iv) repair of Defects, and

(v) removal of objects and debris causing a hazard.

6.8.2 The Trunk Road Incident Support Service plan shall be separate from, but suitably integrated with, the Incident Response Plan and be cross referenced where required with the procedures contained in the Incident Response Plan. The Trunk Road Incident Support Service plan shall include the following headings as a minimum:

(i) Operating Company management structure,

(ii) communication systems,

(iii) police and Traffic Scotland Operations and Infrastructure Services Contractor liaison and key contacts,

(iv) schedule of resources and staff rotas,

(v) vehicle and equipment log including locations,

(vi) resource training and performance appraisal, and

(vii) reporting and evaluation.

The Operating Company shall continuously review its Trunk Road Incident Support Service plan and at intervals not exceeding three months, shall submit the plan to the Director for written consent.

6.9 Communication with the Traffic Scotland National Control Centre

6.9.1 On reaching the scene of an Incident, the Trunk Road Incident Support Service patrol shall report the time of arrival, the nature of Incident and its estimated duration to the Traffic Scotland National Control Centre and Incident Liaison Officers.

6.9.2 Once the Incident is cleared, the patrol shall report the time of departure off-task and confirm the nature of the Incident to the Traffic Scotland National Control Centre and Incident Liaison Officers.

6.9.3 If the Incident is expected to last more than 30 minutes, the patrol shall provide regular updates to the Traffic Scotland National Control Centre, the relevant police control rooms and Incident Liaison Officers. Such information shall be supplied within 10 minutes of receipt of information.

7. INCIDENT SUPPORT UNITS

7.1 General

7.1.1 Incident Support Units shall provide the Incident Response within the Unit. When required, the Incident Support Units shall provide an Incident Response service on those routes patrolled by the Trunk Road Incident Support Service.

7.1.2 The Incident Support Units shall be managed and operated by the Operating Company to provide Incident Response Operations:

(i) on all sections of the Unit outwith the Trunk Road Incident Support Service geographical coverage,

(ii) on all Trunk Road Incident Support Service geographical coverage areas outwith the hours stated in paragraph 6.3.1 of this Part, and

(iii) on all Trunk Road Incident Support Service routes during operational hours when required.

7.2 Primary and Secondary Functions of the Incident Support Units

7.2.1 The primary functions of Incident Support Units are is:

(i) under police instruction, making Incidents safe through the application of temporary traffic management,

(ii) relieving congestion and removing hazards to safety by clearance of debris from traffic Lanes and hard shoulders,

(iii) where Trunk Road infrastructure is damaged as a result of an Incident, undertaking immediate repairs in accordance with the requirements of Schedule 7 Part 1,

(iv) assessing the scene and securing the attendance of additional or specialist resources where the task is beyond the Incident Support Unit's capabilities,

(v) providing a communications link between the Incident site and the Incident Liaison Officers,

(vi) reporting abandoned or broken down vehicles to the Incident Liaison Officers,

(vii) offering assistance to broken down vehicles including assisting in removing broken down vehicles to safe locations and offering fuel, and

(viii) liaising with the Incident Liaison Officers and with police control rooms and the Traffic Scotland Operations and Infrastructure Services Contractor, and individual police officers at Incidents as required.

7.2.2 Subject to there being no impact on the provision of the primary functions, the Incident Support Units may undertake secondary functions as part of the Operations including as a minimum:

(i) Safety Patrols and Safety Inspections, and

(ii) making safe or repairing Category 1 Defects,

in accordance with the requirements of Schedule 7 Part 1.

7.2.3 When the Incident Support Units are required to attend Incidents outwith the Unit in order to render assistance to the police, and or to other operating companies, the Incident Support Units shall respond in accordance with the requirements of this Part.

7.2.4 The Incident Liaison Officers shall keep Records of all occasions where incident support units from other units respond to Incidents on this Unit. Such Incidents shall be excluded from all relevant Performance Indicators.

The Incident Liaison Officers shall ensure instances are recorded where the Incident Support Units are not able to attend Incidents outwith the Unit.

7.2.5 Where the Incident Support Unit patrols are unable to respond to an Incident, both within and outwith the Unit, the Operating Company shall immediately notify the Director of such circumstances.

7.3 Resource Requirements, Competence and Training

7.3.1 Sufficient, suitably qualified and experienced personnel shall be available at all times to carry out the Incident Support Units' duties.

7.3.2 The Incident Support Units personnel shall possess appropriate qualifications in road maintenance and traffic management.

7.3.3 Prior to Commencement of Service Date 1, the Operating Company shall provide sufficient training for Incident Support Units' personnel on its plans and procedures for delivery of the requirements of this Part. Such training shall cover as a minimum:

(i) driver training,

(ii) vehicle and equipment checks and vehicle familiarisation,

(iii) network and route familiarisation,

(iv) understanding of the Trunk Road network,

(v) roles, responsibilities and scope of Incident Support Units service,

(vi) roles and responsibilities of relevant Operational Partners including as a minimum the Traffic Scotland Operations and Infrastructure Services Contractor, Emergency Services, Trunk Road Incident Support Service and Incident Support Units,

(vii) legal responsibilities and powers,

(viii) Airwave emergency traffic management,

(ix) hazardous materials training,

(x) operational response strategies and scenarios,

(xi) road traffic collisions training,

(xii) carriageway clearance training,

(xiii) Safety Inspections and Safety Patrols,

(xiv) scene preservation and incident management,

(xv) broken down and abandoned vehicles – Vehicle Recovery Service,

(xvi) administrative procedures,

(xvii) preparation of health and safety risk assessments and dynamic risk assessments,

(xviii) communication skills,

(xix) first aid,

(xx) conflict resolution, and

(xxi) general maintenance Operations and procedures.

The scope standards and provision of such training shall be agreed in writing by the Director prior to Commencement of Service Date 1 and shall be in line with the standards agreed by the Director.

7.3.4 The Incident Support Units personnel shall participate in joint training exercises with relevant Operational Partners.

7.3.5 Incident Support Units personnel shall carry at all times photographic identification cards provided by the Operating Company, the details of which shall be subject to the written consent of the Director. The cards shall display as a minimum full name, company, position and employee number.

7.4 Vehicles and Equipment

7.4.1 The type of vehicles and the equipment to be provided within the vehicles by the Operating Company shall be as stated in the Specification.

7.4.2 Incident Support Units' vehicles shall have a global positioning system that provides the Incident Liaison Officers with a "live" location and identification facility to enable the effective tasking of resources and monitoring of Operations. The Operating Company shall provide to the Traffic Scotland Operations and Infrastructure Services Contractor with a live feed to this data and all necessary supporting information to allow this live feed to be integrated into the Traffic Scotland Service systems if requested by the Director.

7.4.3 Incident Support Units' vehicles shall use the Trunk Road Incident Support Service Type 1 vehicle requirements as detailed in the Specification. Any temporary vehicles engaged for the service shall be clearly identified as such by the use of temporary markings complying with the Type 2 vehicle requirements as detailed in the Specification.

7.5 Incident Support Units Plan

7.5.1 The Operating Company shall prepare and submit to the Director an Incident Support Units plan as part of the Incident Response Plan and shall comply with the timescales set out in this Part for production and updating of the Incident Response Plan as if such provisions referred to the incident Support Units plan.

The Operating Company's procedures and method statements contained within the Management System shall take account of the requirement to work within the public transport corridors on the Unit and shall cover:

(i) traffic management,

(ii) traffic delay monitoring and reduction,

(iii) assistance in the removal of vehicles and provision of fuel for stranded vehicles,

(iv) repair of Defects, and

(v) removal of objects and debris causing a hazard.

7.5.2 The Incident Support Units plan shall be separate from, but suitably integrated with the Incident Response Plan and be cross referenced where required with the procedures contained in the Incident Response Plan. The plan shall include the following headings as a minimum:

(i) Operating Company management structure,

(ii) communication systems,

(iii) police and Traffic Scotland Operations and Infrastructure Services Contractor liaison and key contacts,

(iv) schedule of resources and staff rotas,

(v) vehicle and equipment log including locations,

(vi) resource training and performance appraisal, and

(vii) reporting and evaluation.

7.6 Reporting to the Incident Liaison Officers

7.6.1 On reaching the scene of an Incident, the Incident Support Unit shall report the time of arrival, the nature of Incident and its estimated duration to the Incident Liaison Officers.

7.6.2 Once the Incident is cleared, the Incident Support Unit shall report the time of departure off-task and confirm the nature of the Incident to the Incident Liaison Officers.

7.6.3 If the Incident is expected to last more than 30 minutes, the Incident Support Unit shall provide regular updates to the Incident Liaison Officers. Such information shall be supplied to the relevant Operational Partners within 10 minutes of receipt of information.

8. VEHICLE RECOVERY SERVICE

8.1 General

8.1.1 The Operating Company shall provide a Vehicle Recovery Service which operates separately from its Trunk Road Incident Support Service and Incident Support Units. The Vehicle Recovery Service shall be fully operational and provide vehicle recovery of vehicles on the Forth Road Bridge from Commencement of Service Date 1 until the Service End Date and on the Queensferry Crossing from Commencement of Service Date 2 until the Service End Date.

8.1.2 The Vehicle Recovery Service during Service Period 2 shall not include heavy recovery vehicles.

8.1.3 The Operating Company shall coordinate and control the dispatch of the Vehicle Recovery Service.

8.1.4 The Operating Company shall ensure that all Vehicle Recovery Service personnel are appointed only after the Operating Company has completed satisfactorily a disclosure process through Disclosure Scotland as stated in Schedule 3 Part 1.

8.2 Primary Function of the Vehicle Recovery Service

8.2.1 The primary functions of the Vehicle Recovery Service are:

(i) to provide vehicle recovery for broken down, abandoned or damaged vehicles to an agreed safe location, unless the driver opts to have the vehicle removed by its own recovery service if it can be done within 15 minutes, and

(ii) to provide a communications link between the Incident and or breakdown site and the Incident Liaison Officers.

8.2.2 The Vehicle Recovery Service will not include roadside vehicle repair or storage of vehicles.

8.3 Hours of Operation

8.3.1 The Vehicle Recovery Service shall be operational 24 hours a day, seven days a week during each Annual Period.

8.4 Response Times

8.4.1 The response times for the Vehicle Recovery Service are stated in the Specification.

8.4.2 Where the Vehicle Recovery Service is unable to respond to an Incident or breakdown, the Operating Company shall immediately notify the police, Traffic Scotland Operations and Infrastructure Services Contractor and the Director of such circumstances.

8.5 Resource Requirements, Competence and Training

8.5.1 Sufficient, qualified and experienced personnel shall be available at all times to undertake Vehicle Recovery Service duties.

8.5.2 The Vehicle Recovery Service personnel shall possess appropriate qualifications, certification and training in vehicle recovery for the vehicles and ancillary equipment to be used to provide this service. The training and certification shall include all appropriate modular courses or National Occupational Standards in a certified training and certification scheme approved by the Institute of Vehicle Recovery and specified by the National Highways Sector Scheme.

8.5.3 Prior to Commencement of Service Date 1, all Vehicle Recovery Service personnel shall be suitably trained in appropriate areas, including as a minimum:

(i) driver training,

(ii) roadside assessment,

(iii) vehicle and equipment checks and vehicle familiarisation,

(iv) roles and responsibilities of the Traffic Scotland Operations and Infrastructure Services Contractor, Emergency Services, Trunk Road Incident Support Service, Incident Support Units and Vehicle Recovery Service,

(v) legal responsibilities and powers,

(vi) emergency traffic management,

(vii) operational response strategies and scenarios,

(viii) vehicle recovery - broken down, abandoned or damaged vehicles,

(ix) ancillary equipment,

(x) administrative procedures,

(xi) health and safety including preparation of risk assessments and dynamic risk assessments,

(xii) communication skills, and

(xiii) first aid.

8.5.4 No later than one year after the Commencement of Service Date 1 the Operating Company shall ensure that the Vehicle Recovery Service is provided by an organisation which is certified to the National Highways Sector Scheme 17/17B.

8.5.5 The Vehicle Recovery Service staff shall participate in joint training exercises with relevant Operational Partners.

8.5.6 Vehicle Recovery Service personnel shall carry at all times photographic identification cards provided by the Operating Company, the details of which shall be subject to the written consent of the Director. The cards shall display as a minimum full name, company, position and employee number.

8.6 Vehicles

8.6.1 The Operating Company shall provide a Vehicle Recovery Service that utilises appropriate vehicles for the safe and efficient recovery of vehicles, provides emergency traffic management, and meets the timescales stated in the Specification. The Operating Company shall apply the livery and branding set out in the Specifications and in the *Transport Scotland Identity Guidelines* to all Operating Company vehicles utilised in the delivery of the Vehicle Recovery Service.

8.7 Radio Communications

8.7.1 The Operating Company shall use radio communications for the Vehicle Recovery Service vehicles. The Operating Company shall utilise this equipment as a dedicated communication system between Vehicle Recovery Service personnel and Incident Liaison Officers.

8.8 Vehicle Recovery Service Plan

8.8.1 The Operating Company shall prepare and submit to the Director a Vehicle Recovery Service plan which shall be part of the Incident Response Plan and shall comply with the timescales set out in this Part for production and updating of the Incident Response Plan as if such provisions refer to the Vehicle Recovery Service plan. In the production of the Vehicle Recovery Service plan the Operating Company shall liaise with the police and take into account all requirements outlined by the police in the operation of the Vehicle Recovery Service.

The Operating Company's procedures and method statements contained within the Management System shall take account of the requirement to work within the public transport corridors on the Unit and shall cover:

(i) traffic management,

(ii) traffic delay monitoring and reduction, and

(iii) assistance in the removal of vehicles – abandoned, damaged or broken down.

8.8.2 The Vehicle Recovery Service plan shall be separate from, but suitably integrated with the Incident Response Plan and be cross referenced where required with the procedures contained in the Incident Response Plan. The plan shall include the following headings as a minimum:

(i) Operating Company management structure,

(ii) operational procedures,

(iii) communication systems,

(iv) police and Traffic Scotland Operations and Infrastructure Services Contractor liaison and key contacts,

(v) schedule of resources and staff rotas,

(vi) vehicle and equipment log including locations,

(vii) resource training and performance appraisal, and

(viii) reporting and evaluation.

8.9 Reporting to the Incident Liaison Officers

8.9.1 On reaching the scene of an Incident or break down, the Vehicle Recovery Service shall report the time of arrival, the nature of Incident or break down and its estimated duration to the Incident Liaison Officers.

8.9.2 Once the Incident or break down is cleared, the Vehicle Recovery Service shall report the time of departure off-task and confirm the nature of the Incident or break down to the Incident Liaison Officers.

8.9.3 If the Incident / break down recovery time is expected to last more than 30 minutes, the Vehicle Recovery Service shall provide regular updates to the Incident Liaison Officers. Such information shall be supplied to the relevant Operational Partners within 10 minutes of receipt of information.

9. PARTICULAR REQUIREMENTS IN RESPECT OF FOOTPATH AND CYCLE TRACK CLOSURE ON THE FORTH ROAD BRIDGE DURING SEVERE WEATHER

9.1 General

9.1.1 The Operating Company shall maintain the historic arrangement for a shuttle service for cyclists and pedestrians wishing to cross the Forth Road Bridge during periods of Severe Weather when footpaths and cycle tracks are closed. The Operating Company shall manually operate the pedestrian barriers to reinforce closure of the Forth Road Bridge footpaths and cycle tracks.

10. PARTICULAR REQUIREMENTS IN RESPECT OF SPILLAGE AND DEPOSIT OF HAZARDOUS OR SENSITIVE MATERIAL

10.1 General

10.1.1 The following allocation of responsibilities applies to all Incidents involving the spillage or deposit of hazardous or sensitive material:

(i) the Emergency Services have the primary responsibility for establishing a safe situation at an Incident site involving the deposit of hazardous or sensitive materials,

(ii) the Emergency Services shall have primary responsibility for co-ordinating the removal of body parts,

(iii) the Emergency Services will have the primary responsibility for identification of chemicals, noxious substances and other hazardous or sensitive material to ensure the safety of the public and the personnel dealing with the Incident. If the Emergency Services consider the Incident site to be low risk due to the nature, quantity and location of such spillages or deposits, the Operating Company shall undertake the identification and safe removal of any chemicals, noxious substances and other hazardous or sensitive material under the supervision of the Emergency Services including any body fluids not removed by the Emergency Services,

(iv) the Operating Company shall not enter an area containing chemicals, noxious substances, body fluids, body parts, and other hazardous or sensitive material until such time as the Emergency Services have confirmed that they require assistance and that it is safe to do so,

(v) the Operating Company shall deploy suitably trained resources to deal with spillages or deposit of chemicals, noxious substances, body fluids or other hazardous or sensitive materials onto the Unit,

(vi) the Incident Response Resources shall include facilities for the identification, management, removal and disposal of chemicals, noxious substances, body fluids and other hazardous and sensitive material,

(vii) the Operating Company shall liaise as necessary with the Scottish Environmental Protection Agency to ensure that identification, management, removal and disposal of waste materials is undertaken in accordance with current best practice guidance to minimise risk to the environment, and

(viii) the Operating Company shall ensure Pollution control measures in accordance with *Pollution Prevention Guideline 22* issued by the Scottish Environmental Protection Agency are available for use.

11. PARTICULAR REQUIREMENTS IN RESPECT OF STRUCTURES

11.1 General

11.1.1 For any Incident affecting Structures outwith the responsibility of the Director, the Operating Company shall liaise with and, subject to an Order, provide support to relevant Operational Partners.

11.1.2 The Incident Response Operations relating to Incidents involving Structures shall, in accordance with the Specification, include as a minimum:

(i) temporary props,

(ii) supports,

(iii) barriers,

(iv) diversion signs,

(v) trench crossing units, and

(vi) steel plates.

11.1.3 The Operating Company shall liaise with Transport Scotland and the Traffic Scotland Operator as detailed in Annex 7.3/A of this Part.

11.1.4 The Operating Company shall have access to secondary and back-up Incident Response Resources for temporary bridging, temporary bridge propping, heavy craneage, temporary barriers, demolition, access platforms and diving.

11.1.5 Following the provision of initial Incident Response Resources, the Operating Company shall provide secondary and back-up Incident Response Resources in respect of Structures to:

(i) assess the safety and stability of a damaged Structure,

(ii) assess whether its use or stability is put at risk and if the safety of the public is endangered,

(iii) arrange and implement footway and cycleway diversions,

(iv) make safe damaged parapets and barriers,

(v) clear detached non structural elements where there is a risk of them falling to the carriageway, footway, cycleway or navigable watercourse below,

(vi) install traffic barriers to prevent vehicular access to and across Structures following a Critical or Major Incident that renders the Structure potentially unsafe,

(vii) make safe electrical supplies to Structures including damaged signs, gantries, high mast lights and other Structures,

(viii) fence to prevent public access to damaged Structures,

(ix) fence damaged parapets and walls,

(x) install temporary barriers to achieve the appropriate containment following damage to parapets and safety fence,

(xi) provide special access to investigate damaged or unsafe Structures,

(xii) implement weight or traffic restrictions to certain vehicle types on Structures,

(xiii) set up signing for short or long term diversion routes, and

(xiv) alleviate and avert flooding to Structures and take measures to prevent further damage due to scour.

11.1.6 Where Incidents require:

(i) Design for remedial measures,

(ii) the assessment of damage, its effect on load carrying capacity and the ability to remain in service, or

(iii) Design of temporary work for existing Structures,

these Operations shall be subject to an Order except where such Operations are Core Operations as set out in Clause 4.5.1 and Clause 9.2.4 of Schedule 1 Part 1.

12. REPORTING OF INCIDENTS

12.1 Critical and Major Incidents

12.1.1 The names, contact telephone numbers and e-mail details of the Director's, Traffic Scotland Operations and Infrastructure Services Contractor and Performance Audit Group’s staff to be contacted will be notified to the Operating Company in writing by the Director during Mobilisation Period 1 and will include outwith Normal Working Hours telephone numbers where applicable.

12.1.2 All data and other relevant information collected by the Operating Company in implementing its:

(i) Disruption Risk Management Plan,

(ii) Incident Response Plan,

(iii) Incident Response Operations,

(iv) Trunk Road Incident Support Service plan,

(v) Incident Support Units plan, and

(vi) Vehicle Recovery Service plan.

shall be stored within the Integrated Roads Information System database in accordance with the Instructions for Use of the Management of Incidents Function in IRIS excluding information relevant to the Vehicle Recovery Service. Where such Records are not captured electronically, the data required shall be manually logged into the Integrated Roads Information System within 24 hours of the data being collected by the Operating Company.

Records not required to be stored in the Integrated Roads Information System shall maintained by the Operating Company in the format provided in Annex 7.3/C of this Part for both the Trunk Road Incident Support Service and the Incident Support Units activities. The Vehicle Recovery Service activities shall be summarised in a table provided in the format of Annex 7.3/F.

12.2 Minor Incidents

12.2.1 On becoming aware of a Minor Incident that has the potential to escalate to a Critical Incident, cause significant delay or cause risk to the public or workers, the Operating Company shall notify the relevant Operational Partners as stated in Annex 7.3/A of this Part.

12.3 Road Traffic Incidents Involving Fatalities

12.3.1 In addition to the reporting requirements stated in Annex 7.3/A of this Part for Major and Critical Incidents, where an Incident involves fatalities, the Incident Liaison Officers shall immediately notify the staff stated in Annex 7.3/D of this Part, providing brief details of the Incident.

12.3.2 Within 24 hours of any fatal Incident, the Operating Company shall submit a detailed report by Electronic Copy using part 1 of the fatal accident notification form detailed in Annex 7.3/D of this Part to the appropriate Director's staff referred to in the Annex 7.3/D of this Part.

12.3.3 A joint site observation at the location shall be undertaken by the Operating Company, the Director and the police, within 28 days of the Incident. Within five Working Days of the site visit having been carried out, the Operating Company shall submit a detailed report using part 2 of the fatal accident notification form detailed in Annex 7.3/D of this Part to the Director within five Working Days. The report shall include all correspondence relating to the Incident and potential causal factors including the maintenance, historic site data, weather conditions and any other information relevant to the location of the Incident.

12.3.4 In the event of a fatal Incident inquiry being held, the Operating Company shall, subject to an Order:

(i) assist the Director,

(ii) provide all available information, and

(iii) attend the inquiry to be examined on matters of fact.

13. POST INCIDENT DEBRIEFING

13.1 General

13.1.1 No later than 30 days after each Critical or Major Incident, the Operating Company shall:

(i) review its Disruption Risk Management Plan and propose improvements to the Director,

(ii) coordinate debriefing activities with relevant Operational Partners as required, and

(iii) coordinate debriefing activities with other operating companies as required.

13.1.2 No later than 25 Working Days after the commencement of each Annual Period, the Operating Company shall submit an annual report reviewing the impact of Incidents on the Unit for the previous Annual Period.

14. INCIDENT DATA

14.1 General

14.1.1 The Incident Liaison Officer shall ensure that all data stated within this Part is collected, maintained and updated at all times.

14.1.2 All data and other relevant information collected by the Operating Company in implementing its:

(i) Disruption Risk Management Plan,

(ii) Incident Response Plan,

(iii) Incident Response Operations,

(iv) Trunk Road Incident Support Service plan,

(v) Incident Support Units plan, and

(vi) Vehicle Recovery Service plan.

shall be stored within the Integrated Roads Information System in accordance with the template provided in Annex 7.3/E of this Part excluding information relevant to the Vehicle Recovery Service. Where such Records are not captured electronically, the data required shall be manually logged into the Integrated Roads Information System within 24 hours of the data being collected by the Operating Company.

Records not required to be stored in the Integrated Roads Information System shall be retained in accordance with Schedule 5 Part 2. The daily record sheet to be maintained by the Operating Company shall be in the format provided in Annex 7.3/C of this Part for both the Trunk Road Incident Support Service's and the

Incident Support Units' activities. The Vehicle Recovery Service activities shall be summarised in a table provided in the format of Annex 7.3/F.

This is Annex 7.3/A to Schedule 7 Part 3 referred to in the foregoing Agreement between Scottish Ministers and Amey LG Limited.

SCOTTISH MINISTERS' REQUIREMENTS

SCHEDULE 7 PART 3

INCIDENT RESPONSE

ANNEX 7.3/A – Notification of Incidents

SCOTTISH MINISTERS' REQUIREMENTS

SCHEDULE 7 PART 3

INCIDENT RESPONSE - ANNEX 7.3/A – NOTIFICATION OF INCIDENTS - NOTIFICATION OF MAJOR, CRITICAL AND MINOR INCIDENTS

		Major Incident			Critical Incident			Minor Incident		
Time of Day	**Who to contact**	**By Whom**	**How**	**When**	**By Whom**	**How**	**When**	**By Whom**	**How**	**When**
Normal Working Hours (Mon 0800 - Fri 1800)	CAT1	TRISS or ILO	Telephone	Immediately	TRISS or ILO	Telephone	Immediately			
	TSOp	TRISS or ILO	Telephone*	Immediately	TRISS or ILO	Telephone*	Immediately	TRISS or ILO	Telephone*	Immediately
	ILO	TRISS or ISU	Telephone	Immediately	TRISS or ISU	Telephone	Immediately	TRISS or ISU	Daily Record Sheet	End of shift
	TRT	ILO	Telephone	Immediately						
	TEM	ILO	Email	Immediately	ILO	Email	Immediately			
Outwith Normal Working Hours	CAT1	TRISS or ILO	Telephone	Immediately	TRISS or ILO	Telephone	Immediately			
	TSOp	TRISS or ILO	Telephone*	Immediately	TRISS or ILO	Telephone*	Immediately	TRISS or ILO	Telephone*	Immediately
	ILO	TRISS or ISU	Telephone	Immediately	TRISS or ISU	Telephone	Immediately	TRISS or ISU	Daily Record Sheet	End of shift
	TEM	ILO	Email	Immediately	ILO	Email	Immediately			

Note: In addition to the notification of Major, Critical and Minor Incidents above, the Operating Company must also follow and implement the guidance provided in Annex 7.3/D in the notification of road traffic Incidents involving fatalities.

Type of Service or Role
CAT1 – Category 1 responder in accordance with the Civil Contingencies Act 2004
TSOp – Traffic Scotland Operator
ILO – Incident Liaison Officer
TRT – Transport Resilience Team - The primary purpose of the TRT is to support the operational response by the Operating Company and report to the Scottish Ministers on the issues and actions taken.
TEM – Transport Emergencies Mailbox – Mailbox used to provide information to Transport Scotland staff alerting them to issues or possible situations to enable them to respond accordingly – TransportEmergencies@transport.gov.scot

Contact Mode
Telephone* – TRISS personnel contact the TSOp via Airwave Radio
Daily Record Sheet – see Annex 7.3/C

This is Annex 7.3/B to Schedule 7 Part 3 referred to in the foregoing Agreement between Scottish Ministers and Amey LG Limited.

SCOTTISH MINISTERS' REQUIREMENTS

SCHEDULE 7 PART 3

INCIDENT RESPONSE

ANNEX 7.3/B – Designated Trunk Road Incident Support Service Routes

SCOTTISH MINISTERS' REQUIREMENTS

SCHEDULE 7 PART 3

INCIDENT RESPONSE

ANNEX 7.3/B – Designated Trunk Road Incident Support Service Routes

Forth Bridges Unit

Patrol Area 1 (Commencement of Service Date 1 to Commencement of Service Date 2)

M90 between M9J1a and A90 Scotstoun Junction

A90 between Dalmeny and Ferrytoll Junction including Forth Road Bridge

M90/A90 between Ferrytoll Junction and Halbeath Junction

A823(M) Pitreavie Spur

Patrol Area 1a (from Commencement of Service Date 2)

M90 (A90) between M9J1a and Halbeath Junction 3 including Queensferry Crossing

A90 between Dalmeny and Scotstoun Junction

A9000 between Scotstoun and Ferrytoll Junction including Forth Road Bridge (southbound includes the Public Transport Corridor between Echline and the A90 at Scotstoun, and northbound includes the slip road on to the Forth Road bridge from Echline and the slip from the A90 to the B800)

A823(M) Pitreavie Spur.

This is Annex 7.3/C to Schedule 7 Part 3 referred to in the foregoing Agreement between Scottish Ministers and Amey LG Limited.

SCOTTISH MINISTERS' REQUIREMENTS

SCHEDULE 7 PART 3

INCIDENT RESPONSE

ANNEX 7.3/C – Daily Record Sheet

SCOTTISH MINISTERS' REQUIREMENTS

SCHEDULE 7 PART 3

INCIDENT RESPONSE

ANNEX 7.3/C – Daily Record Sheet

Patrol Routes: ……

Date: …… Day: ……..

Operative Names: …….

1. No. of Incidents attended (Line out for each attended)

1	2	3	4	5	6	7	8	9	10	11	12	15	14	15
16	17	18	19	20	21	22	23	24	25	26	27	28	29	30
31	32	33	34	35	36	37	38	39	40	41	42	43	44	45

2. Incident Call Outs - Insert Reference Number

1.	6.
2.	7.
3.	8.
4.	9.
5.	10.

3. Incident(s) of Note - Insert Reference Number

1.	2.
3.	4.

4. Defect Identification - Insert Reference Number

1.	**5.**
2.	**6.**
3.	**7.**
4.	**8.**

5. Roadside Assistance to Public

Route and Location	Nature	Time Spent (Minutes)
1.		
2.		
3.		
4.		

6. Assistance Rendered to Police (other than Incident Call Outs)

Route and Location	Nature	Time Spent (Minutes)
1.		
2.		
3.		
4.		

7. Safety Patrol(s)

Route	Duration	No. of Faults/Issues
1.		
2.		
3.		
4.		

8. Updates for the Traffic Scotland Operations and Infrastructure Services Contractor and other agencies

(for example - required Lane closures, Severe Weather, excess surface water)

Time(s)	Route and Location	Nature
1.		
2.		
3.		
4.		

9. Any other information not shown previously (continue overleaf if required).

Completed Daily Logs shall be forwarded to the Operating Company at the end of each shift.

This is Annex 7.3/D to Schedule 7 Part 3 referred to in the foregoing Agreement between Scottish Ministers and Amey LG Limited.

SCOTTISH MINISTERS' REQUIREMENTS

SCHEDULE 7 PART 3

INCIDENT RESPONSE

ANNEX 7.3/D – Fatal Accident Notification

SCOTTISH MINISTERS' REQUIREMENTS

SCHEDULE 7 PART 3

INCIDENT RESPONSE

ANNEX 7.3/D – Fatal Accident Notification

FATAL ACCIDENT NOTIFICATION (PART 1)

ACCIDENT REFERENCE

ACCIDENT DETAILS

Locus					
Route No and c/way type		**Grid Reference**			
Time		**Day**		**Date**	
Council Area		**Police Area**		**Police Ref No**	
Weather		**Road Condition**			
Road Works		**Light condition**			

DESCRIPTION OF CIRCUMSTANCES

VEHICLE DETAILS

CASUALTY DETAILS

Prepared by: **Date**

Sent to: **TS Area Manager**

TS Strategic Road Safety Officer

*The Operating Company shall inform Transport Scotland's area manager, network manager, area network manager and strategic road safety officer immediately by email after the Incident and submit this form within 24 hours.

**At an appropriate time after the Incident, ordinarily within 28 days, the Operating Company should arrange a suitable date to visit the site with representatives from Transport Scotland's accident investigation team and the Police to record the nature of the locus and establish whether any further details have come to light. The site visit is intended to ascertain at that time whether an AIP investigation is worthwhile. Following the site visit, Part 2 of this form shall be completed and submitted electronically to Transport Scotland.

FATAL ACCIDENT NOTIFICATION

LOCATION PLAN

PHOTOGRAPHS

No of photos at OC's discretion	
	No of photos at OC's discretion

FATAL ACCIDENT NOTIFICATION

DETAILS OF EMERGENCY RESPONSE OPERATIONS UNDERTAKEN BY THE OPERATING COMPANY

ADDITIONAL NOTES

FATAL ACCIDENT NOTIFICATION (PART 2)

JOINT SITE OBSERVATIONS

ACCIDENT REFERENCE

ACCIDENT DETAILS

Locus					
Route No and c/way type			**Grid**		
Time		**Day**		**Date**	
Council		**Police Area**		**Police Ref No**	
Weather			**Road**		
Road Works			**Light**		

SITE VISIT DETAILS

Day/Date and time of inspection			
Weather at time of site		**Road**	
Attendees at meeting			

OVERALL DESCRIPTION OF THE LOCUS AND SITE OBSERVATIONS

C/Way type and width		**Road Surface**	
Speed Limit		**Road Studs**	
Is kerbing present?		**Drainage type**	
Is footway present?		**Verge width**	
Carriageway markings		**Street Lighting**	
Road signs or safety barrier present		**Other street furniture**	
Pedestrian Crossing		**Vehicle hit object off c/way**	

3 YEAR ACCIDENT HISTORY (IF APPLICABLE)

FATAL ACCIDENT REPORT FORM SUPPLEMENTARY PHOTOGRAPHS

SUMMARY

As a result of discussions and information gathered from the site visit as well as consideration given to the concentration and level of accidents throughout the network it is suggested that:

Tick as appropriate

a) An accident investigation report is undertaken as part of the current year's programme.	☐
b) An accident investigation study is not required at this time.	☐
c) A copy of the Police fatal accident report is obtained when it becomes available.	☐

Prepared by: _____ **Date** _____

Sent to: _____ **TS Area Manager**

_____ **TS Strategic Road Safety Officer**

- A copy of the form should be retained by the OC and copies submitted to TS and the Police.

FATAL ACCIDENT PROCEDURES GUIDE

The Operating Company shall notify the following personnel within Transport Scotland in the case of an Incident involving a fatality **immediately by e-mail:**

Area Manager

Network Manager

National Network Manager

Strategic Road Safety Officer (strategicroadsafety@transportscotland.gsi.gov.uk)

A detailed report using Part 1 of this form shall be submitted to the Area Manager and Strategic Road Safety Officer by Electronic Copy within **24 hours** of the incident. It shall include, but not be limited to, the following information:

- Location (preferably with plan)
- Brief description of the circumstances
- Photographs of the location if possible
- Details of casualties and vehicles involved
- Details of road conditions
- Information such as weather, roadworks, and furniture
- Outline of the emergency response undertaken
- Information about the deceased or the Police incident reference number

A joint site observation at the locus should be undertaken by the Operating Company's AIP representative, Transport Scotland's Strategic Road Safety Officer and the Police, ordinarily within 28 days, of the incident.

A detailed report using Part 2 of the incident reporting procedure shall be submitted to the Area Manager and Strategic Road Safety Officer within **5 Working Days** of the site visit having been carried out.

This is Annex 7.3/F to Schedule 7 Part 3 referred to in the foregoing Agreement between Scottish Ministers and Amey LG Limited.

SCOTTISH MINISTERS' REQUIREMENTS

SCHEDULE 7 PART 3

INCIDENT RESPONSE

ANNEX 7.3/F – Vehicle Recovery Service – Breakdown Statistics

SCOTTISH MINISTERS' REQUIREMENTS

SCHEDULE 7 PART 3

INCIDENT RESPONSE

ANNEX 7.3/F – Vehicle Recovery Service – Breakdown Statistics

BREAKDOWN STATISTICS

YEAR _____

	Category of Breakdown/Recovery (Light Recovery Vehicles)										TOTAL LIGHT RECOVERY		MONTHLY TOTAL
	MECHANICAL		ACCIDENT		PUNCTURE		FIRE		FUEL				
MONTH	FRB	QC	FRB	QC	FRB	QC	FRB	QC	FRB	QC	FRB	QC	
JAN													
FEB													
MAR													
APR													
MAY													
JUN													
JUL													
AUG													
SEP													
OCT													
NOV													
DEC													
TOTAL													

	Category of Breakdown/Recovery (Heavy Recovery Vehicles)										TOTAL HEAVY RECOVERY		MONTHLY TOTAL
	MECHANICAL		ACCIDENT		PUNCTURE		FIRE		FUEL				
MONTH	FRB	QC	FRB	QC	FRB	QC	FRB	QC	FRB	QC	FRB	QC	
JAN													
FEB													
MAR													
APR													
MAY													
JUN													
JUL													
AUG													
SEP													
OCT													
NOV													
DEC													
TOTAL													

SCOTTISH MINISTERS' REQUIREMENTS

SCHEDULE 7 PART 4

LANDSCAPE DEVELOPMENT PROCESS AND DELIVERABLES

CONTENTS **Page No.**

1.	**LANDSCAPE DEVELOPMENT PROCESS**	**1**
1.1	General	1
1.2	Landscape Strategy	1
1.3	Landscape Development Plan	2
1.4	Schedule of Landscape Opportunities	3
1.5	Landscape Scheme Implementation Information	4
1.6	Annual Landscape Management Report	5

ANNEX 7.4/A – Grassland Report **9**

ANNEX 7.4/B – NOT USED **13**

ANNEX 7.4/C – Deer Management Plan **17**

ANNEX 7.4/D – Landscape Development Deliverables Annual Timetable **21**

SCOTTISH MINISTERS' REQUIREMENTS

SCHEDULE 7 PART 4

LANDSCAPE DEVELOPMENT PROCESS AND DELIVERABLES

1. LANDSCAPE DEVELOPMENT PROCESS

1.1 General

1.1.1 No later than 30 days after the start of the Mobilisation Period, the Director will provide the Operating Company with a copy of the current landscape management information including the:

(i) landscape strategy,

(ii) landscape inventory,

(iii) landscape maintenance plan,

(iv) Landscape Development Plan, and

(v) annual landscape management report.

1.1.2 The Operating Company shall ensure the landscape inventory, including detailed inspection records and maintenance requirements, are complete and kept up to date at all times.

1.1.3 The Operating Company's Landscape Architect shall be responsible for the preparation and delivery of:

(i) the landscape strategy,

(ii) the Landscape Development Plan, and

(iii) the annual landscape management report.

1.1.4 The Operating Company shall continuously update the landscape inventory in the routine maintenance and management function of the Integrated Roads Information System and ensure the landscape inventory is complete and accurate at all times.

1.1.5 The Operating Company shall submit one hard copy and one Electronic Copy with drawings in portable document format (pdf) to the Director of the:

(i) landscape strategy,

(ii) Landscape Development Plan, and

(iii) annual landscape management report,

at the timescales detailed within this Part.

1.1.6 The Operating Company's Landscape Architect shall attend all landscape and environmental progress meetings arranged with the Director. The Landscape Architect shall also attend as necessary meetings with others, including the Director's staff and any third party organisations or individuals, concerning landscaping issues related to the Unit.

1.2 Landscape Strategy

1.2.1 During the first Annual Period, the Operating Company shall prepare a detailed landscape strategy for the Unit which takes full account of the landscape strategy

developed by the previous operating company. The detailed landscape strategy shall be submitted for the Director's consent no later than 50 Working Days before the end of the first Annual Period.

1.2.2 The Operating Company shall annually review and update the landscape strategy and submit this for the Director's consent no later than 25 Working Days prior to the end of the second Annual Period. For subsequent Annual Periods the Operating Company shall comply with the annual timetable outlined in Annex 7.4/D of this Part.

1.2.3 The landscape strategy shall be produced on a Route by Route basis and shall identify and describe in detail the specific landscape character of the Route. This shall include the relevant features and elements within and adjacent to each Route.

1.2.4 The landscape strategy shall comply with Transport Scotland's mandatory landscape policy, *Fitting Landscapes – Securing more sustainable landscapes*, and include:

(i) clear cross-referencing to the landscape inventory,

(ii) Ordnance Survey based location plans clearly showing the Routes and areas under review,

(iii) brief descriptions of the Routes and areas under review, highlighting the general character of the extent of the Route, the appearance and value of the landscape, comments on the quality of the landscape and any ecological elements which may impact on, or be affected by, the maintenance and management of the Trunk Road soft estate,

(iv) a range of photographs depicting the various character zones,

(v) the perceived main issues relating to the continued management of the Trunk Road soft estate in this location, taking into account topics such as safety, visual aspects, general amenity and biodiversity. This may also require consideration of the interests and elements of land immediately adjacent to, but outwith, the Trunk Road boundary,

(vi) consideration of any relevant, related studies, plans or strategies for the location, including Route action plans and Route accident reduction plans,

(vii) general proposals for the future development of the environment related to the Trunk Road, and

(viii) any other issues that may be relevant to the landscape strategy, including information and advice from third parties such as Scottish Natural Heritage and relevant National Park Authority.

1.3 Landscape Development Plan

1.3.1 The Operating Company shall take account of the landscape strategy and the annual landscape management report in preparing the Landscape Development Plan. The Landscape Development Plan shall be developed to ensure compliance with the Specification and take account of the opportunities identified in the schedule of landscape opportunities referred to in this Part.

1.3.2 No later than 50 Working Days before the end of the first Annual Period, the Operating Company shall prepare and submit a Landscape Development Plan for the second Annual Period for the Director's consent.

1.3.3 The Operating Company shall review, revise and update the Landscape Development Plan during each subsequent Annual Period. For subsequent Annual Periods the Operating Company shall comply with the annual timetable outlined in Annex 7.4/D of this Part.

1.3.4 When developing the Landscape Development Plan, the Operating Company shall ensure compliance with Transport Scotland's mandatory landscape policy *Fitting Landscapes – Securing more sustainable landscapes*

1.3.5 When developing the Landscape Development Plan, the Operating Company shall take account of Transport Scotland's commitment to the protection and enhancement of biodiversity through all relevant legislation and documents including:

(i) the Scottish Government's biodiversity strategy *Scotland's Biodiversity – It's in your hands*.

(ii) *the 2020 Biodiversity Challenge Document*

1.3.6 The Landscape Development Plan shall include:

(i) recommendations in accordance with the landscape strategy,

(ii) recommendations resulting from the annual landscape management report, and

(iii) recommendations resulting from the Operating Company's landscape opportunities inspections referred to in this Part.

1.3.7 For each potential landscape scheme and intervention identified in the schedule of landscape opportunities, the Landscape Development Plan shall include:

(i) Route number,

(ii) Scheme name,

(iii) location reference,

(iv) outline details of the proposed Operations,

(v) justification for selection,

(vi) cost estimate, and

(vii) priority rating (high, medium and low) with relevant justification.

1.4 Schedule of Landscape Opportunities

1.4.1 The Operating Company's Landscape Architect shall prepare and maintain a schedule of landscape opportunities and use this in the preparation of the Landscape Development Plan. The schedule of landscape opportunities may be requested by the Director and shall be informed by the results of the regular landscape opportunities inspections and by ad hoc inspections and visits to the network by the Landscape Architect and through discussion with other relevant operatives.

1.4.2 The landscape opportunities inspections shall be undertaken by the Landscape Architect regularly at intervals not exceeding 12 months throughout the Unit to identify potential opportunities to improve the landscape associated with the Trunk Road network.

1.4.3 The schedule of landscape opportunities shall:

(i) record potential landscape schemes and interventions, and

(ii) identify Landscape Areas which could be improved by changing the maintenance requirements detailed in Schedule 7 Part 1

The Operating Company shall provide an Estimated Bid Value for all potential landscaping schemes and interventions as well as cost estimates for improvements to maintenance requirements.

1.4.4 Both of the categories identified in paragraph 1.4.3 of this Part shall also be considered and developed in terms of:

(i) general amenity,

(ii) more efficient and more appropriate maintenance,

(iii) road safety and reliability,

(iv) improved biodiversity and nature conservation,

(v) sustainability and climate change, and

(vi) any other issues identified as significant by the Landscape Architect.

1.4.5 When identified within the schedule of landscape opportunities, the Operating Company shall submit to the Director as part of the Landscape Development Plan a report detailing the proposed changes to the maintenance requirements for Landscape Areas. The report shall include a full description of the benefits of the proposed change and any cost savings or cost increases associated with undertaking the alternative maintenance activities. Subject to an Order and when consented to by the Director, the Operating Company shall implement the proposed changes to the maintenance requirements.

1.5 Landscape Scheme Implementation Information

1.5.1 The Operating Company shall meet with the Director following submission of the Landscape Development Plan to review each potential landscape scheme and intervention identified. The Director shall determine which of the proposed landscape Schemes or management variations shall be developed further and inform the Operating Company.

1.5.2 The Operating Company shall prepare a Statement of Intent and Value for Money Assessment for those potential Schemes, interventions and alterations to maintenance Operations approved in principle by the Director for further consideration as part of the Landscape Development Plan.

1.5.3 The Statement of Intent shall include the following information:

(i) description of the proposal,

(ii) large scale plan showing the context of the area,

(iii) more detailed plans and drawings with supporting sketches or photographs illustrating the specific proposal,

(iv) written description of the relevant objectives,

(v) demonstration of the proposal's relationship to the landscape strategy for the relevant Route or section of Route,

(vi) detailed cost estimate,

(vii) details and justification of the priority rating given, and

(viii) Design and construction programme.

1.5.4 Subject to an Order, the Operating Company shall design and execute landscape Schemes and interventions.

1.5.5 The Operating Company shall provide and maintain throughout each Annual Period, a detailed programme for all landscape Schemes and interventions that have been ordered. The detailed programme shall include the:

(i) period of construction,

(ii) activities to be undertaken, and

(iii) estimated completion dates.

This programme shall be submitted to the Director in accordance with the requirements of Schedule 4 Part 1.

1.6 Annual Landscape Management Report

1.6.1 The Operating Company shall submit an annual landscape management report to the Director in accordance with the annual timetable outlined in Annex 7.4/D of this Part. The report shall provide a review of all landscaping Operations undertaken within the Unit during that Annual Period.

1.6.2 The annual landscape management report shall correspond to the various Routes within the Unit as described in the routine maintenance and management function of the Integrated Roads Information System.

1.6.3 The annual landscape management report shall record:

(i) the general condition of the Landscape Areas within the Unit including a short statement for each Route,

(ii) details of the effectiveness of maintenance Operations undertaken,

(iii) details of the effectiveness of the changes consented to by the Director, that have been made to the maintenance Operations as stated in paragraph 1.4.5 of this Part,

(iv) a summary of all Operations undertaken as part of the Landscape Development Plan including a statement on the progress of all approved schemes,

(v) details of the additional Landscape Areas added into the Operating Company's maintenance programme resulting from the completion of Schemes undertaken by others working on behalf of the Director,

(vi) the performance of any contractors and sub-contractors responsible for landscape Operations within the Unit,

(vii) a statement advising the Director on the progress on delivering the requirements of the landscape strategy,

(viii) the Operating Company's achievement of the requirements of the pesticide plan referred to in this Part, specifying the general level of pesticide use throughout the Unit and noting locations subjected to significant

applications. If requested by the Director, pesticide record forms that are produced by the Operating Company in accordance with the landscape specification shall be included as an annex to the annual landscape management report,

(ix) details of the Operations undertaken in support of enhancing biodiversity and nature conservation, including works associated with creating, repairing or improving any wildlife mitigation measures within the Unit,

(x) a statement from the Operating Company detailing any problems or specific unforeseen issues that have affected the delivery of the landscaping requirements which may have arisen during the period covered by the annual report and recommendations for action required,

(xi) details of any significant amendments made by the Operating Company to the landscape inventory in the routine maintenance and management function of the Integrated Roads Information System,

(xii) a grassland report to include the activities identified in Annex 7.4/A of this Part, setting out the Operating Company's achievements and any concerns and opportunities for the grassed areas in each section of Route identified within the landscape strategy,

(xiii) an injurious species report referring to the approved injurious species management plan required by this Part, detailing the location, nature and extent of the injurious species infestations that can be found within the Unit and the success or otherwise of the measures taken by the Operating Company to reduce the area and extent of the known infestations, and

(xiv) a summary report of road kill records within the Unit recorded in the routine maintenance and management function of the Integrated Roads Information System and details of the impact of the species identified within the report.

1.6.4 As part of its annual landscape management report, the Operating Company shall prepare and submit a pesticide plan including targets for the potential reduction of pesticide usage through the use of alternative, but equally effective, proposals. The pesticide plan shall take account of the relevant requirements contained within the Specification.

1.6.5 As part of its annual landscape management report, the Operating Company shall prepare and submit an injurious species management plan. The injurious species management plan shall include:

(i) details contained within the injurious species report of infestations within Unit,

(ii) proposals for achieving a reduction in infestation during the next Annual Period, and

(iii) proposed targets for reducing infestations during the next Annual Period.

The Director shall consider the report and confirm the Operating Company's targets for reducing infestations during the next Annual Period. All areas of infestation shall be recorded within routine maintenance and management function of the Integrated

Roads Information System and updated annually before the end of each Annual Period.

1.6.6 As part of its annual landscape management report, the Operating Company shall prepare and submit a deer management plan including the activities indentified in Annex 7.5/C of this Part, setting out the Operating Company's achievements in respect of deer management and its strategy and future proposals for the next Annual Period.

This is Annex 7.4/A to Schedule 7 Part 4 referred to in the foregoing Agreement between Scottish Ministers and Amey Highways Limited.

SCOTTISH MINISTERS' REQUIREMENTS

SCHEDULE 7 PART 4

LANDSCAPE DEVELOPMENT PROCESS AND DELIVERABLES

ANNEX 7.4/A – Grassland Report

SCOTTISH MINISTERS' REQUIREMENTS

SCHEDULE 7 PART 4

LANDSCAPE DEVELOPMENT PROCESS AND DELIVERABLES

ANNEX 7.4/A – Grassland Report

1.1 Grassed areas, in the various categories recorded, make up the largest single landscape element within the Trunk Road boundary and the management and maintenance of these areas requires the commitment of a considerable level of resource during each Annual Period. The intention of the grassland report is for the Operating Company's Landscape Architect to identify the general condition of the grassed areas within the Unit and ensure that the appropriate maintenance operations undertaken meet the objectives of the area as recorded in the Landscape Strategy.

1.2 As well as any location specific objectives which may have been determined, other more general objectives could include:

(i) safety,

(ii) integration with the wider landscape,

(iii) encouragement of ecological diversity, and

(iv) visual interest and amenity.

1.3 It is not intended that the report will record every individual area of grass under each category but rather provide an overview of the broad condition of the grass within defined character zones and in response to specific areas of interest, such as junctions, settlements and the like.

The grassland report shall include:

(i) general description of existing grassland within unit,

(ii) specific Route grassland areas,

(iii) current maintenance regime,

(iv) issues arising from current maintenance regime,

(v) high amenity grass areas,

(vi) amenity grass areas,

(vii) general grass,

(viii) rough grass,

(ix) specific issues,

(x) sward health,

(xi) sight line areas,

(xii) weed content,

(xiii) erosion/over-run,

(xiv) bulbs, and

(xv) specific opportunities for amending grass maintenance regimes.

This is Annex 7.4/B to Schedule 7 Part 4 referred to in the foregoing Agreement between Scottish Ministers and Amey Highways Limited.

SCOTTISH MINISTERS' REQUIREMENTS

SCHEDULE 7 PART 4

LANDSCAPE DEVELOPMENT PROCESS AND DELIVERABLES

ANNEX 7.4/B – NOT USED

SCOTTISH MINISTERS' REQUIREMENTS

SCHEDULE 7 PART 4

LANDSCAPE DEVELOPMENT PROCESS AND DELIVERABLES

ANNEX 7.4/B – NOT USED

This is Annex 7.4/C to Schedule 7 Part 4 referred to in the foregoing Agreement between Scottish Ministers and Amey Highways Limited.

SCOTTISH MINISTERS' REQUIREMENTS

SCHEDULE 7 PART 4

LANDSCAPE DEVELOPMENT PROCESS AND DELIVERABLES

ANNEX 7.4/C – Deer Management Plan

SCOTTISH MINISTERS' REQUIREMENTS

SCHEDULE 7 PART 4

LANDSCAPE DEVELOPMENT PROCESS AND DELIVERABLES

ANNEX 7.4/C – Deer Management Plan

The Code of Practice for Deer Management ("the Code") was introduced by the *Wildlife and Natural Environment (Scotland) Act 2011* (WANE Act). The Code applies to all land owners and managers of land where wild deer are found which includes areas within the Trunk Road boundary.

The Code advises that there is a difference between collaboration in the deer management planning process and cooperation in sharing practical deer management tasks. While some direct action may be required by the Operating Company in order to meet its requirements in accordance with this Part, this will be subject to the normal controls and approvals under this Contract.

The fundamental objective of the Code is to set out recommended action for sustainable deer management and to make provision for collaboration between landowners and managers, thereby ensuring that any negative impacts of deer on the public interest are minimised as far as practicable and deer welfare is safeguarded.

The Operating Company's annual deer management plan shall be prepared as part of its annual landscape management report. The deer management plan shall be prepared in accordance with this Annex and the provisions of the Code. The Operating Company shall structure its deer management plan on the following basis:

(i) strategy – a broad strategy covering the general approach adopted by the Operating Company to managing deer across the Unit. This section should identify the general areas within the Unit where wild deer may come into conflict with the road network (specifying the area and Routes involved); include good practice proposals for collaborating in deer management planning with adjacent landowners or other interested parties and recommend methods to be employed for meeting the requirements of the Code,

(ii) part A – this shall form a record of works undertaken and achievements made by the Operating Company over the preceding Annual Period in respect of deer management within the Unit. This may include the planned installation or maintenance of specific deer mitigation facilities, liaison with adjacent landowners or other interested parties, action to resolve Incidents or reports received concerning deer accessing the Unit and general comment on the efficacy of current mitigation measures in place across the Unit, and

(iii) part B – proposals and actions intended to be implemented during the following Annual Period in accordance with the Operating Company's deer management plan strategy. This may include areas and Routes to be targeted for deer management, details of deer mitigation proposals and the likely actions involved and proposals for future liaison and collaboration with adjacent landowners and other interested parties.

In terms of possible organisations with whom collaboration or liaison may be required in respect of deer management, the Operating Company may need to consider approaching the local Deer Management Group(s) (if applicable), Scottish Natural Heritage, The Forestry Commission, National Trust for Scotland, local authorities and the like in addition to any relevant local individual landowners or estates, although this should not be considered an exhaustive list.

This is Annex 7.4/D to Schedule 7 Part 4 referred to in the foregoing Agreement between Scottish Ministers and Amey Highways Limited.

SCOTTISH MINISTERS' REQUIREMENTS

SCHEDULE 7 PART 4

LANDSCAPE DEVELOPMENT PROCESS AND DELIVERABLES

ANNEX 7.4/D – Landscape Development Deliverables Annual Timetable

Table 7.4.D.1 - Landscape Development Deliverables Annual Timetable

Latest Date	Action
31 May	Operating Company to submit draft annual landscape management report
30 June	Director to provide feedback on draft annual landscape management report
31 July	Operating Company to submit finalised annual landscape management report and revised landscape strategy
15 August	Operating Company to submit draft Landscape Development Plan for review by the Director
15 September	Meeting to take place between the Director and the Operating Company to provide feedback on the Landscape Development Plan and agree which proposals should be further developed along with an outline programme and to agree outline programme
15 November	Operating Company to submit Statements of Intent for each agreed proposal together with a detailed delivery programme for final approval. Each approved intervention will then follow as a detailed bid.

SCOTTISH MINISTERS' REQUIREMENTS

SCHEDULE 7 PART 5

NEW ROADS AND STREET WORKS ACT 1991

CONTENTS **Page No.**

1.	**DEFINITIONS**	**1**
1.1	General	1
2.	**DELEGATED FUNCTIONS**	**1**
2.1	Operating Company Obligations	1
3.	**GENERAL REQUIREMENTS**	**1**
3.1	Coordination and Monitoring	1
4.	**THE SCOTTISH ROAD WORKS REGISTER**	**2**
4.1	Establishing and Maintaining the Register	2
5.	**THE NATIONAL STREET GAZETTEER**	**2**
5.1	Establishing and Maintaining the Gazetteer	2
6.	**DESIGNATIONS**	**3**
6.1	Review and Updating of Designations	3
7.	**INSPECTIONS, INVESTIGATORY WORK AND THE NATIONAL CORING PROGRAMME**	**4**
7.1	Requirements	4
8.	**DUTIES AS ROAD WORKS AUTHORITY AND BRIDGE AUTHORITY**	**6**
8.1	Requirements	6
9.	**PRIVATE APPARATUS**	**7**
9.1	Operating Company Obligations	7
10.	**OTHER DUTIES**	**8**
10.1	Liaison, Monitoring and Performance Reporting	8
10.2	Enforcement	9

ANNEX 7.5/A – Statutory Functions and Other Services **11**

SCOTTISH MINISTERS' REQUIREMENTS

SCHEDULE 7 PART 5

NEW ROADS AND STREET WORKS ACT 1991

1. DEFINITIONS

1.1 General

1.1.1 Where the term “Working Days” is used, for the purposes of paragraph 8 of this Part only, the definition of Working Day will be that contained in the *New Roads and Street Works Act 1991*.

1.1.2 Items in the Statutory Functions column marked # in Annex 7.5A of this Part are in the *Secretary of State's Trunk Road Functions (Contracting Out) (Scotland) Order 1996*. Items marked #* in Annex 7.5A of this Part will be additions to the new Contracting Out Order due to commence before Commencement of Service Date 1. Once the new Contracting Out Order commences such items marked insert #* shall be treated as Statutory Functions. In the event of the new Contracting Out Order not commencing before Commencement of Service Date 1, the sections so marked will be treated as "Services in relation to Scottish Ministers functions" until such time as the new Contracting Out Order commences.

2. DELEGATED FUNCTIONS

2.1 Operating Company Obligations

2.1.1 The Statutory Functions of Scottish Ministers under the *New Roads and Street Works Act 1991* that are delegated to, and shall be undertaken by, the Operating Company are listed in Annex 7.5/A of this Part.

2.1.2 In addition to those Statutory Functions, the Operating Company shall carry out the functions described in paragraphs 4 to 10 of this Part and the services in relation to the Scottish Ministers’ functions listed in Annex 7.5/A of this Part.

2.1.3 The Operating Company shall comply with all codes of practice, advice notes, good practice and *guidance* that are issued by any authorised body in relation to work on the Trunk Road within the Unit, as are applicable from time to time.

3. GENERAL REQUIREMENTS

3.1 Coordination and Monitoring

3.1.1 The Operating Company shall coordinate the execution of work of all kinds affecting the Unit or part of the Unit, including all Undertakers' work activities, and shall monitor the performance of all Undertakers to fulfil the requirements of section 118 sub-sections (1), (2), (2A), (3) and (3A) of the *New Roads and Street Works Act 1991.*

4. THE SCOTTISH ROAD WORKS REGISTER

4.1 Establishing and Maintaining the Register

4.1.1 The Operating Company shall employ competent persons to populate the SRWR and keep the SRWR up to date at all times in accordance with the requirements of Section 122A, 112B and 126A of the *New Roads and Street Works Act 1991*.

The Director will pay any prescribed fees required under section 112A of the *New Roads and Street Works Act 1991* arising from use of the Scottish Road Works Register.

4.1.2 No later than 30 days prior to Commencement of Service Date 1, the Operating Company shall provide and thereafter maintain until the Service End Date the necessary telecommunication links and three suitable computer terminals, loaded with the appropriate software, permissions and logins, to provide a connection to the SRWR.

After the Operating Company has completed the connection to the SRWR, the Operating Company shall have access to a copy of the SRWR for the Unit.

4.1.3 During the period of 30 days prior to Commencement of Service Date 1, the Operating Company shall:

(i) become fully familiar with the operation of the SRWR, and

(ii) liaise daily with the previous operating company and FETA and attend meetings in relation to any Undertakers' work which are due to continue into, or commence during, the first Annual Period.

4.1.4 No later than 15 days prior to Commencement of Service Date 1, the Operating Company shall collect any *New Roads and Street Works Act 1991* Historical Records from the previous operating company and FETA.

4.1.5 No later than five Working Days after Commencement of Service Date 1 and again no later than five Working Days after Commencement of Service Date 2, the Operating Company shall bring the SRWR up to date in compliance with section 112B of the *New Roads and Street Works Act 1991* and shall keep it continuously up to date until the Service End Date. At the Service End Date, or as otherwise requested in writing by the Director, the Operating Company shall pass any paper information from the SRWR pertaining to the Unit to the Director.

4.1.6 The Director and the Performance Audit Group shall be entitled to have access to the SRWR for the Unit at any time.

5. THE NATIONAL STREET GAZETTEER

5.1 Establishing and Maintaining the Gazetteer

5.1.1 The National Street Gazetteer is a database of all the roads in Scotland held in the SRWR. Each local roads authority is responsible for producing the gazetteer of roads within its area, including Transport Scotland's Trunk Road and motorway network. Each local roads authority's data consists of two files:

(i) the gazetteer file, referred to as the "base gazetteer", which includes the Trunk Road network; amendments to this file can only be carried out by the local roads authority, and

(ii) the associated data file which the local roads authority populates only for its own network; the Operating Company is responsible for populating and maintaining the information relating to the roads within the Unit contained in this data file.

5.1.2 The local roads authorities hold area gazetteer group meetings regularly. The Operating Company shall attend these meetings to communicate any changes necessary to the "base gazetteer" to the local roads authorities.

5.1.3 No later than 60 Working Days after Commencement of Service Date 1, the Operating Company shall complete a review of:

(i) data held in the National Street Gazetteer which relates to the roads within the Unit,

(ii) gazetteer data published in the SRWR by the local roads authorities, and

(iii) the associated data for the roads within the Unit.

5.1.4 Within this review period, the Operating Company shall:

(i) update the National Street Gazetteer, or arrange for it to be brought up to date by the relevant local roads authorities,

(ii) provide the necessary information to the local roads authorities to enable updating of the National Street Gazetteer where they are to carry this function out on behalf of the Operating Company, and

(iii) ensure that the associated data for the roads within the Unit in the SRWR is up to date.

5.1.5 Prior to Commencement of Service Date 2, the Operating Company shall:

(i) update the National Street Gazetteer, or arrange for it to be brought up to date by the relevant local roads authorities for Network 2,

(ii) provide the necessary information to the local roads authorities to enable updating of the National Street Gazetteer where they are to carry this function out on behalf of the Operating Company for Network 2, and

(iii) ensure that the associated data for the roads within the Unit in the SRWR is up to date for Network 2.

5.1.6 The Operating Company shall thereafter keep both the National Street Gazetteer and the SRWR up to date until the Service End Date, liaising with the local roads authority as required.

6. DESIGNATIONS

6.1 Review and Updating of Designations

6.1.1 No later than 30 days prior to Commencement of Service Date 1, the Operating Company shall access the existing associated data relating to the roads within the Unit which is held in the SRWR. This associated data includes as a minimum:

(i) the designation of traffic sensitive roads,

(ii) the designation of roads and structures with special engineering difficulties,

(iii) the designation of protected roads,

(iv) the reinstatement categories, and

(v) all non-statutory designations.

6.1.2 The Operating Company shall create the associated data where it is missing, submit it to the SRWR and thereafter maintain the data and keep it under review and up to date until the Service End Date.

6.1.3 No later than 60 Working Days after Commencement of Service Date 1 and at quarterly intervals thereafter, the Operating Company shall provide a report to the Director recommending any changes required to the associated data. The Operating Company shall obtain the written consent of the Director before adding, removing or amending any associated data.

The Operating Company shall carry out all the requirements of the *New Roads and Street Works Act 1991* and any other necessary procedures for making, amending and withdrawing associated data relating to any part of the Roads within the Unit.

7. INSPECTIONS, INVESTIGATORY WORK AND THE NATIONAL CORING PROGRAMME

7.1 Requirements

7.1.1 In accordance with the requirements of sections 131 and 134 of the *New Roads and Street Works Act 1991* and paragraph 7.1.2 of this Part, and prior to carrying out any inspections and investigatory work, the Operating Company shall prepare and submit to the Director for his written consent:

(i) its processes for, and anticipated work programme of, inspections, based on historical volumes of Undertakers' work, and

(ii) its processes for, and anticipated work programme of, investigatory work, coring and testing, based on historical failure rates for reinstatements of Roads within the Unit carried out by Undertakers.

A draft programme for the Trunk Road network within the Unit shall be provided to the Director no later than 15 Working Days prior to Commencement of Service Date 1 and no later than 25 Working Days prior to the end of each Annual Period thereafter.

A final programme for the Trunk Road network within the Unit shall be provided to the Director no later than 15 Working Days after the start of each Annual Period.

The programme for the first Annual Period shall be prepared by the Operating Company in consultation with the previous operating company for the Trunk Road network within the Unit.

7.1.2 The Operating Company shall ensure that the reinstatements carried out by Undertakers do not materially affect the structure of the Trunk Road network within the Unit. The Operating Company shall carry out additional inspections and additional investigatory work to that identified in paragraph 7.1.1 of this Part.

The purpose of such additional inspections and investigatory work is to ensure that, as a minimum, the Operating Company shall undertake the following:

(i) a detailed inspection during the initial reinstatement process of all reinstatements which have not previously been inspected in accordance with paragraphs 2.1.1, 2.1.3 and 7.1.1 of this Part, thus ensuring that 100 percent of reinstatements within the Unit are inspected during the initial reinstatement process,

(ii) a further detailed inspection within 25 calendar days of the date on which the excavation commenced, and

(iii) subject to an Order, coring of reinstatements where any Defects are observed.

7.1.3 In addition to these inspections and investigatory work, the Director may require the Operating Company to undertake further inspections and investigatory work, subject to an Order.

7.1.4 The Operating Company shall provide a report on, and analysis of, the results of all inspections and investigatory work as part of the quarterly report required in accordance with paragraph 10 of this Part, in a format consented to by the Director. These reports shall be retained in a register which the Operating Company shall establish and thereafter maintain and keep up to date at all times until the Service End Date.

7.1.5 The national coring programme is carried out periodically throughout Scotland and is intended to ensure compliance with standards and to achieve continual improvement in the quality of reinstatement in accordance with section 131 of the *New Roads and Street Works Act 1991*.

7.1.6 The Local RAUC(s) manage the coring programme within each area. One local roads authority is designated as lead authority with responsibility for appointing one coring contractor and to coordinate the coring and report back to the RAUC(S).

7.1.7 The Operating Company shall liaise with the:

(i) local roads authorities,

(ii) the lead authority as agreed by the RAUC(S), and

(iii) relevant Undertakers,

regarding the national coring programme.

7.1.8 The Operating Company shall submit proposals for a coring programme to assist the national coring programme to the Director. The Director will consider the coring programme submitted by the Operating Company and issue an Order for any necessary coring.

One Electronic Copy and one paper copy of the results of the coring programme executed by the Operating Company shall be forwarded to the local roads authorities carrying out the national coring programme and the Performance Audit Group. A final report on each annual programme shall be submitted by the Operating Company to the Director no later than 15 Working Days after the end of each Annual Period and no later than 25 Working Days before the Service End Date.

7.1.9 Where Defects in reinstatements carried out by Undertakers are identified as a result of inspections and investigatory work, the Operating Company shall pursue the

relevant Undertaker and require it to rectify such Defects within the period set out in the relevant codes of practice, or if no period is set out, within 25 days.

If the Undertaker fails to rectify the Defect within the required time, the Operating Company shall advise the Director and provide written recommendations for resolving the matter.

7.1.10 The Operating Company shall be responsible for identifying, and pursuing on behalf of the Director, all sums due to be paid by Undertakers to the Scottish Ministers, including inspections fees, charges and penalties for which Undertakers are liable under the *New Roads and Street Works Act 1991*.

8. DUTIES AS ROAD WORKS AUTHORITY AND BRIDGE AUTHORITY

8.1 Requirements

8.1.1 The Operating Company shall undertake the following duties to enable the Scottish Ministers to comply with their obligations as road works authority and bridge authority as conferred by sections 122 and 147 of the *New Roads and Street Works Act 1991*:

(i) liaising with Undertakers about plans and sections of proposed work associated with Structures on the Unit identified as having special engineering difficulties,

(ii) submitting the designs and specifications for such work, with recommendations regarding approval, for the Director's consent,

(iii) no later than three Working Days after receipt, referring the Undertaker's proposals, together with the Operating Company's related recommendations, to the Director for his written consent.

The Director will communicate his decision on such matters to the Operating Company in writing:

(a) within two Working Days of receipt for work relating to a service pipe, service line, overhead electric lines or telecommunication apparatus, and

(b) within 10 Working Days of receipt for any other case.

(iv) in accordance with the timescales stated in section 122 and section 7(2) of Schedule 6 of the *New Roads and Street Works Act 1991*, Undertaker's proposals have to be considered and replied to as follows:

(a) within seven Working Days of receipt of the original application for work relating to a service pipe, service line, overhead electric lines, or telecommunication apparatus, or

(b) within one month of receipt of the original application in any other case.

The Operating Company shall ensure that the period between receipt of Undertakers' proposals and its subsequent written communication of the Director's decision to the Undertakers does not exceed these timescales. In accordance with the *New Roads and Street Works Act 1991*, the plan and section of work is deemed to have been accepted if a response is not made within these timescales,

(v) monitoring the progress of the Undertaker's work in, on, or adjacent to, Structures on the Trunk Road forming part of the Unit at all stages and reporting to the Director when the Operating Company considers that:

(a) progress is not in accordance with the programme, or

(b) work is not being carried out in accordance with the designs and specifications consented to by the Director.

and,

(vi) updating the structures management function of the Integrated Roads Information System and obtaining as-built records of all work from the Undertaker, which shall be stored in the Operating Company's Records for the relevant Structure.

9. PRIVATE APPARATUS

9.1 Operating Company Obligations

9.1.1 No later than 30 days prior to Commencement of Service Date 1, the Operating Company shall liaise with the previous operating company and FETA and collect details of any existing private apparatus installed in accordance with the permission to execute road works under section 109 of the *New Roads and Street Works Act 1991,* section 61 of the *Roads (Scotland) Act 1984* or under any other agreement with the Scottish Government or Scottish Ministers.

9.1.2 A driver information system is operated by third party operator under a licence from the Scottish Ministers to install, maintain, operate, alter and upgrade equipment used for monitoring traffic conditions on Trunk Roads within the Unit; such third party to whom such a licence has been granted being called for the purposes of this Part a "licensed operator". The equipment consists of sensors fixed to bridge parapets over the carriageway or located in verges and transmission boxes at the side of roads.

The licensed operator is required to give a minimum of six weeks' notice to the Director of the installation of additional equipment. The Director will notify the Operating Company of such notice within three Working Days of receipt.

If the Operating Company requires the removal or protection of the licensed operator's equipment by the licensed operator in order to allow the maintenance of, or alteration to, any part of the Unit, the Operating Company shall issue a written instruction to the licensed operator giving 25 Working Days' notice of the requirement for such removal or protection to be arranged.

If the licensed operator fails to adequately remove or protect its equipment, the Operating Company shall take all necessary measures to remove or protect the equipment and shall seek to recover all those costs incurred by the Operating Company from the licensed operator which the licensed operator is due to pay where it does not so remove or protect its equipment.

The Operating Company shall notify the Director in writing of any such failures by the licensed operator and any failure by the licensed operator to meet such costs.

Any such unrecovered Operating Company costs shall be paid by the Scottish Ministers in accordance with the other provisions of this Contract.

9.1.3 As at Operations Commencement Date 1 the licensed operator is TrafficMaster. The Director shall advise the Operating Company of any change in the identity of the licensed operator.

10. OTHER DUTIES

10.1 Liaison, Monitoring and Performance Reporting

10.1.1 The Operating Company shall attend the meetings of the Area RAUC(s) and local RAUC(s), which are relevant to the Trunk Roads within the Unit.

These meetings are held four times per year. The Operating Company shall attend these meetings to ensure the effective coordination of Operations, Works and work by authorised contractors and Undertakers on the Unit and or the execution of Operations.

10.1.2 No later than 30 days prior to Commencement of Service Date 1, the Operating Company shall make recommendations for the Director's consent on the liaison arrangements required between itself, other operating companies and agencies of the Scottish Government to deliver the requirement of the *New Roads and Street Works Act 1991.*

10.1.3 No later than 30 days prior to Commencement of Service Date 1, in liaison with the Director and the other operating companies, the Operating Company shall:

(i) devise common Monitoring Indicators for the Undertakers' work, and

(ii) devise common Performance Indicators for its own work,

and obtain the Director's written consent to them. Following receipt of the Director's consent, the Operating Company shall add the relevant indicators to the appropriate lists in Schedule 5 Part 6, Annexes 5.6/A and 5.6/B.

10.1.4 The Operating Company shall follow the principles that underpin the Performance Indicators and Monitoring Indicators listed in Schedule 5 Part 6 when devising the new common indicators, which shall be designed to demonstrate the Operating Company's performance, and that of the Undertakers, in relation to their obligations under the *New Roads and Street Works Act 1991* and relevant codes of practice and best practice guidance documents and advice notes as referred to in this Part.

10.1.5 The Operating Company shall use these common Monitoring Indicators and Performance Indicators and the Scottish Road Works Commissioner's indicators to provide monitoring information and performance assessment reports to the Director on a quarterly and annual basis.

10.1.6 The Operating Company shall provide a report on the performance of the Operating Company against the Scottish Road Works Commissioner’s indicators on an annual basis. The request for such a report will be received by the Director from the Scottish Road Works Commissioner and passed to the Operating Company within seven Working Days of receipt. The Operating Company shall propose any amendments and additions which are necessary to improve the indicators and which will assist in the improvement of its performance, for the Director's consent, within the timescale stipulated by the Director.

10.1.7 The Operating Company shall attend quarterly meetings and one annual meeting to discuss the quarterly and annual reports respectively and any other meetings that are

necessary in order to coordinate and ensure compliance with the SRWR and the Scottish Road Works Commissioner's requirements.

10.1.8 The Operating Company shall provide the annual report no later than 50 Working Days after the end of each Annual Period. The annual report shall:

(i) include a review of the effectiveness of the Monitoring Indicators in measuring the performance of the Undertakers,

(ii) include a review of the effectiveness of the Performance Indicators in measuring its own performance,

(iii) include a review of the performance of the Operating Company against the Scottish Road Works Commissioner's indicators, and

(iv) propose any amendments and additions which are necessary to improve the indicators and which will assist in the improvement of both its own and the Undertakers' performance, for the Director's consent.

10.1.9 When consented to in writing by the Director, the Operating Company shall implement the additional and revised Monitoring Indicators or Performance Indicators and the lists in Schedule 5 Part 6, Annexes 5.6/A and 5.6/B shall be updated accordingly.

10.1.10 Commencing 75 Working Days after the start of the first Annual Period and thereafter throughout until the Service End Date, the Operating Company shall provide the Director with a quarterly report not later than 25 Working Days after the end of each quarter. The quarterly report shall include the amounts due from each Undertaker during the preceding three month period, together with any necessary information to support the reason for the fees, charges and penalties.

10.2 Enforcement

10.2.1 The Operating Company shall monitor the SRWR for potential fixed penalty notices.

10.2.2 The Operating Company shall, on a set of dates to be confirmed in writing with the Director, on a monthly basis:

(i) discuss potential fixed penalty notices with the Director,

(ii) provide the necessary background,

(iii) make recommendations to the Director for their issue or retention,

(iv) on receipt of consent from the Director to the recommendations, notify the relevant party of the intention to pursue a fixed penalty notice and manage the process up to the point of issuing the penalty, and

(v) make recommendations to the Director for the final fixed penalty issue or retention.

10.2.3 The Operating Company shall provide support to the Director at any hearings held in connection with disputed notices.

10.2.4 The Operating Company shall also create potential fixed penalties, where appropriate, for notices which have not been identified automatically by the SRWR.

10.2.5 The issuing of fixed penalty notices shall be undertaken by the Director.

This is Annex 7.5/A to Schedule 7 Part 5 referred to in the foregoing Agreement between Scottish Ministers and Amey LG Limited.

SCOTTISH MINISTERS' REQUIREMENTS

SCHEDULE 7 PART 5

NEW ROADS AND STREET WORKS ACT 1991

ANNEX 7.5/A – Statutory Functions and Other Services

SCOTTISH MINISTERS' REQUIREMENTS

SCHEDULE 7 PART 5

NEW ROADS AND STREET WORKS ACT 1991

ANNEX 7.5/A – Statutory Functions and Other Services

Table 7.5.A.1 ***New Roads and Street Works Act 1991***

Section of NRSWA	Provision	Statutory Functions	Services in relation to Scottish Ministers functions	Operating Company 's Duties
109	Permission to Execute Road Works		#	Advise the Scottish Ministers on conditions to be attached to permission, payment of fees, withdrawal of permission and or removal of apparatus
		#		Exercise the functions conferred on the Scottish Ministers as road works authority by this section except for the power to grant permissions which must not be exercised without the prior consent of the Scottish Ministers
			#	Assist the Scottish Ministers, as requested by the Scottish Ministers

Table 7.6.A.1 *New Roads and Street Works Act 1991*

Section of NRSWA	Provision	Statutory Functions	Services in relation to Scottish Ministers functions	Operating Company 's Duties
110	Prohibition of unauthorised road works		#	Advise the Scottish Ministers of any offences committed, with details and recommendations for further actions
				Assist the Scottish Ministers, as requested by the Scottish Ministers
112B	Duty to enter information on the Scottish Road Works Register	#*		Carry out the functions of the Scottish Ministers as road works authority or as roads authority under section 112B(5) and section 112B(7)
113(1)	Advance notice of certain works and compliance with requirements imposed by the roads authority		#	Monitor the Scottish Road Works Register for notices of Undertakers' work on the network and processing any such notices
113 (4)		#*		Carry out the functions of the Scottish Ministers as road works authority under section 113(4)
113(5)			#	Advise the Scottish Ministers of any offences committed with details and recommendations for further actions
				Assist the Scottish Ministers, as requested by the Scottish Ministers
114(1)	Notice of starting date of works and prohibition on starting works without notice except with consent of road works authority		#	Monitor the Scottish Road Works Register for notices of undertakers works on the network and processing any such notices
114(4)		#*		Carry out the functions of the Scottish Ministers as road works authority under section 114(4)
114(5) and (6)			#	Advise the Scottish Ministers of any offences committed with details and recommendations for further actions
				Assist the Scottish Ministers, as requested by the Scottish Ministers

Table 7.5.A.1 *New Roads and Street Works Act 1991*

Section of NRSWA	Provision	Statutory Functions	Services in relation to Scottish Ministers functions	Operating Company 's Duties
115(1) and (4)	Power to give directions as to timing of road works and duty to have regard to code of practice in exercising power	#		Exercise the functions conferred on the Scottish Ministers as road works authority by this section
115(1A)	Power to give directions as to timing of subsisting road works and duty to have regard to code of practice in exercising power	#*		Exercise the functions conferred on the Scottish Ministers as road works authority by this section
115(2A) (3)			#	Advise the Scottish Ministers of any appeals against directions or offences committed, with details and recommendations for further actions
				Assist the Scottish Ministers, as requested by the Scottish Ministers
115A(1) (3)	Powers to give direction as to placing apparatus	#*		Exercise the functions conferred on the Scottish Ministers as road works authority by this section Advise the Scottish Ministers of any disputes
115A (5) (6)			#	Advise the Scottish Ministers of any appeals or offences committed, with details and recommendations for further actions
				Assist the Scottish Ministers, as requested by the Scottish Ministers
116	Notice of emergency works		#	Monitor the SRWR for notices of Undertakers' work on the network and process any such notices Advise the Scottish Ministers of any offences committed, with details and recommendations for further actions
				Assist the Scottish Ministers, as requested by the Scottish Ministers

Table 7.5.A.1 *New Roads and Street Works Act 1991*

Section of NRSWA	Provision	Statutory Functions	Services in relation to Scottish Ministers functions	Operating Company 's Duties
117(1) to (3) (7) and (9)	Restriction on works following substantial works for road purposes	#		Exercise the functions conferred on the Scottish Ministers as road works authority by this section
			#	Advise the Scottish Ministers of any disputes regarding withholding consent
117(6)			#	Advise the Scottish Ministers of any offences committed, with details and recommendations for further actions
				Assist the Scottish Ministers, as requested by the Scottish Ministers
118	General duty of roads works authority to co-ordinate works	#		Exercise the functions conferred on the Scottish Ministers as road works authority by this section
119(1)	General duty of Undertakers to co-operate with respect to the execution of road works	#*		Exercise the functions conferred on the Scottish Ministers as road works authority by this section
119A	Enforcement of S118 S119 : imposition of penalties		#	Advise the Scottish Ministers of any offences committed, with details and recommendations for further actions
				Assist the Scottish Ministers, as requested by the Scottish Ministers

Table 7.5.A.1 *New Roads and Street Works Act 1991*

Section of NRSWA	Provision	Statutory Functions	Services in relation to Scottish Ministers functions	Operating Company 's Duties
120 (1)	Protected roads	#*		Exercise the functions conferred on the Scottish Ministers as road works authority by this section except for the power to designate which must not be exercised without the prior consent of the Scottish Ministers
120 (1)(4) and (6)			#	Advise the Scottish Ministers of the details of any proposed consents under this section and any disputes regarding consents
120(3)	Protected roads		#	Advise the Scottish Ministers of any fees recoverable from Undertakers, with details and recommendations for further actions Advise the Scottish Ministers of any recommendation to designate a road
120 (3)(5) and (6)			#	Assist the Scottish Ministers, as requested by the Scottish Ministers Advise the Scottish Ministers of any expenses he may agree to contribute to Undertakers, or disputes notified to him

Table 7.5.A.1 *New Roads and Street Works Act 1991*

Section of NRSWA	Provision	Statutory Functions	Services in relation to Scottish Ministers functions	Operating Company 's Duties
121(2) to (4)	Supplementary provisions as to designation of protected roads		#	Assist the Scottish Ministers, as requested by the Scottish Ministers
			#	Advise the Scottish Ministers in respect of these subsections, with details and recommendations for further actions. Prepare appropriate directions to Undertakers for use by the Scottish Ministers
		#*		On consent from the Director, exercise the functions conferred on the Scottish Ministers as road works authority by this section
121(5)			#	Assist the Scottish Ministers, as requested by the Scottish Ministers
121 (6)		#*		Carry out the functions of the Scottish Ministers as roads authority under section 121(6)
122(1)	Roads with special engineering difficulties	#		Exercise the functions conferred on the Scottish Ministers as road works authority by this section except the power to designate which must not be exercised without the prior consent of the Scottish Ministers
122(6)		#		Carry out the functions of the Scottish Ministers as roads authority under section 122(6)

Table 7.5.A.1 *New Roads and Street Works Act 1991*

Section of NRSWA	Provision	Statutory Functions	Services in relation to Scottish Ministers functions	Operating Company 's Duties
123(2)	Traffic-sensitive roads		#	Assist the Scottish Ministers, as requested by the Scottish Ministers
123(4)		#		Exercise the functions conferred on the Scottish Ministers as road works authority by this section except the power to designate without the consent of the Scottish Ministers
		#		Carry out the functions of the Scottish Ministers as roads authority under section 123(4)
124(2)	Undertaker to comply with directions given by traffic authority	#*		Make directions where appropriate for the Scottish Ministers as traffic authority under this section
124(5)	Road works authority power to take steps where Undertaker has failed to comply	#*		Take appropriate steps on behalf of the Scottish Ministers as roads authority under this section except insofar as they relate to the power to recover costs without the consent of the Scottish Ministers
124(4) and (6)	Summary conviction		#	Advise the Scottish Ministers of any costs recoverable from Undertakers, with details and recommendations for further actions
				Assist the Scottish Ministers, as requested by the Scottish Ministers
				Advise the Scottish Ministers of any offences committed, with details and recommendations for further actions

Table 7.5.A.1 *New Roads and Street Works Act 1991*

Section of NRSWA	Provision	Statutory Functions	Services in relation to Scottish Ministers functions	Operating Company 's Duties
125(3) and (4)	Power to give notices to Undertaker to mitigate and discontinue obstruction and to take necessary steps		#	Assist the Scottish Ministers, as requested by the Scottish Ministers
		#*		Serve notices as appropriate on behalf of the Scottish Ministers as road works authority under this section
			#	Advise the Scottish Ministers of any non- compliance with a notice, and make recommendations for further action
125(2)	Summary Conviction		#	Advise the Scottish Ministers of any costs recoverable from Undertakers, with details and recommendations for further actions
				Assist the Scottish Ministers, as requested by the Scottish Ministers
				Advise the Scottish Ministers of any offences committed, with details and recommendations for further actions
126 (1A) (2A)	Qualifications of supervisors and operatives:- Notification of names		#	Assist the Scottish Ministers, as requested by the Scottish Ministers
				Advise the Scottish Ministers of any instances where these powers should be used, with details and recommendations for further actions
126(3)	Qualifications of supervisors and operatives		#	Advise the Scottish Ministers of any offences committed, with details and recommendations for further actions

Table 7.5.A.1 *New Roads and Street Works Act 1991*

Section of NRSWA	Provision	Statutory Functions	Services in relation to Scottish Ministers functions	Operating Company 's Duties
126A	Duty to ensure competence of employees		#	Assist the Scottish Ministers, as requested by the Scottish Ministers
				Assist the Scottish Ministers in ensuring that only competent employees are used for this function
127(1)	Undertaker to afford reasonable facilities to the road works authority	#*		Exercise the functions conferred on the Scottish Ministers as road works authority by this section
127(2)	Summary conviction		#	Advise the Scottish Ministers of any offences committed, with details and recommendations for further actions
129(3) and (4)	Undertaker to inform road works authority of completion of interim and permanent reinstatement		#	Assist the Scottish Ministers, as requested by the Scottish Ministers
129(6)	Summary conviction		#	Advise the Scottish Ministers of any offences committed, with details and recommendations for further actions
130(5)	Offence relating to materials, workmanship and standard of reinstatement		#	Assist the Scottish Ministers, as requested by the Scottish Ministers
				Advise the Scottish Ministers of any offences committed under any part of section 130, with details and recommendations for further actions

Table 7.5.A.1 *New Roads and Street Works Act 1991*

Section of NRSWA	Provision	Statutory Functions	Services in relation to Scottish Ministers functions	Operating Company 's Duties
131(1)	Powers of road works authority in relation to reinstatement	#		Exercise the functions conferred on the Scottish Ministers as road works authority by this section
131(2)		#		Exercise the functions conferred on the Scottish Ministers as road works authority by this section and pass all costs received that are fixed fees in section 131(2) to the Scottish Ministers
131(3) and (4)		#		Exercise the functions conferred on the Scottish Ministers as road works authority by this section, except insofar as they relate to the power to recover costs
131(3) and (4)			#	Advise the Scottish Ministers of any costs recoverable from Undertakers, with details and recommendations for further actions
132A	Powers of road works authority to require Undertakers to resurface		#	Assist the Scottish Ministers, as requested by the Scottish Ministers
		#*		Exercise the functions conferred on the Scottish Ministers as road works authority or bridge authority by this section and the regulations referred to
134	Inspection fees	#*		Exercise the functions conferred on the Scottish Ministers as roads works authority by this section and pass all fees received to the Scottish Ministers
135	Liability for cost of temporary traffic regulations		#	Advise the Scottish Ministers of any costs recoverable from Undertakers, with details and recommendations for further actions

Table 7.5.A.1 *New Roads and Street Works Act 1991*

Section of NRSWA	Provision	Statutory Functions	Services in relation to Scottish Ministers functions	Operating Company 's Duties
137	Contributions to costs of making good long-term damage.		#	Assist the Scottish Ministers, as requested by the Scottish Ministers
				Advise the Scottish Ministers as road works authority or relevant authority of any costs recoverable from Undertakers, with details and recommendations for further actions
139	Duty to inform Undertakers of location of apparatus		#	Assist the Scottish Ministers, as requested by the Scottish Ministers
140	Duty to maintain apparatus	#*		Exercise the functions conferred on the Scottish Ministers as road works authority or relevant authority by this section except insofar as they relate to the power to recover costs
141(1)	Liability for damage or loss caused		#	Advise the Scottish Ministers as road works authority or relevant authority of any costs recoverable from Undertakers, with details and recommendations for further actions
				Assist the Scottish Ministers, as requested by the Scottish Ministers
				Advise the Scottish Ministers of any compensation recoverable from Undertakers, with details and recommendations for further actions
		#*		On consent from the Scottish Ministers, exercise the functions conferred on the Scottish Ministers as road works authority or bridge authority by this section

Table 7.5.A.1 *New Roads and Street Works Act 1991*

Section of NRSWA	Provision	Statutory Functions	Services in relation to Scottish Ministers functions	Operating Company 's Duties
142(2)	Works for road purposes likely to affect apparatus in the road		#	Assist the Scottish Ministers, as requested by the Scottish Ministers
		#*		Exercise the functions conferred on the Scottish Ministers as road works authority or bridge authority by this section
142(3)	Summary conviction		#	Advise the Scottish Ministers of any offences committed by the Scottish Ministers with details and recommendations for further actions
143(1)	Undertaker and bridge or roads authority to take steps where apparatus is affected by major works		#	Assist the Scottish Ministers, as requested by the Scottish Ministers
		#*		Exercise the functions conferred on the Scottish Ministers as road works authority or bridge authority by this section
143(3)(4)	Requirement to pay compensation in certain circumstances		#	Advise the Scottish Ministers of any compensation recoverable from, or due to, Undertakers, with details and recommendations for further actions
				Assist the Scottish Ministers, as requested by the Scottish Ministers

Table 7.5.A.1 *New Roads and Street Works Act 1991*

Section of NRSWA	Provision	Statutory Functions	Services in relation to Scottish Ministers functions	Operating Company 's Duties
144(1)	Sharing of costs of necessary measures		#	Advise the Scottish Ministers of allowable costs to be borne by the Scottish Ministers
		#*		On consent from the Scottish Ministers, exercise the functions conferred on the Scottish Ministers as road works authority or bridge authority by this section
144 (2)		#*		Exercise the functions conferred on the Scottish Ministers as road works authority or bridge authority by this section and the regulations referred
144(3)			#	Advise the Scottish Ministers of any costs recoverable from Undertakers, with details and recommendations for further actions
				Assist the Scottish Ministers, as requested by the Scottish Ministers
147(4) and (5)	Consultation with bridge authority prior to execution of certain works, provision of reasonable facilities for bridge authority to monitor works, and compliance with directions of bridge authority	#*		Exercise the functions conferred on the Scottish Ministers as bridge authority by this section
147(6)			#	Advise the Scottish Ministers of any offences committed, with details and recommendations for further actions

Table 7.5.A.1 *New Roads and Street Works Act 1991*

Section of NRSWA	Provision	Statutory Functions	Services in relation to Scottish Ministers functions	Operating Company 's Duties
149(2) and (3)	Provisions as to reinstatement of sewers, drains or tunnels		#	Assist the Scottish Ministers, as requested by the Scottish Ministers
		#*		Exercise the functions conferred on the Scottish Ministers by these sections, except insofar as they relate to the power to recover costs without the prior consent of the Scottish Ministers
154	Offences		#	Advise the Scottish Ministers of any costs recoverable from Undertakers, with details and recommendations for further actions
				Assist the Scottish Ministers, as requested by the Scottish Ministers
				Advise the Scottish Ministers on further offences, with details and recommendations for further actions
154A	Fixed penalties offences for some section of part IV as shown in schedule 6A		#	Assist the Scottish Ministers, as requested by the Scottish Ministers
				Advise the Scottish Ministers when a fixed penalty notice may be issued
162(3)	Former controlled land		#	Advise the Scottish Ministers on failure to pay fixed penalty notices and recommendations for further actions
				Advise the Scottish Ministers in respect of indemnities, with details and recommendations for further actions
				Assist the Scottish Ministers, as requested by the Scottish Ministers

SCOTTISH MINISTERS' REQUIREMENTS

SCHEDULE 7 PART 6

MANAGEMENT AND MAINTENANCE OF STRUCTURES

CONTENTS **Page No.**

1.	**INTRODUCTION**	**1**
1.1	General	1
2.	**MAINTENANCE MANAGEMENT**	**1**
2.1	Structures Management	1
2.2	The Structures Management Function of the Integrated Roads Information System	2
2.3	Structures Maintenance Schedule	2
2.4	Maintenance and Operations Manuals and Health and Safety Files	3
3.	**INSPECTION REQUIREMENTS**	**4**
3.1	General	4
3.2	Structures Safety Inspections	5
3.3	General Inspections	6
3.4	Principal Inspections	7
3.5	Scour Inspections and Assessments	7
3.6	Special Inspections	8
3.7	Weather Resistant Steel Bridge Monitoring	8
4.	**MONITORING REQUIREMENTS**	**9**
4.1	General	9
5.	**REQUIREMENTS FOR MAINTENANCE OF STRUCTURES**	**9**
5.1	General	9
5.2	Substructures and Superstructures	10
5.3	Expansion Joints	10
5.4	Drainage Systems	10
5.5	Parapets and Pedestrian Protection on Structures	10
5.6	Bearings and Bearing Shelves	10
5.7	Structures Over or Conveying Watercourses	10
5.8	Sign and or Signal Gantries, High Mast Lighting and other Masts	10
5.9	Non-structural Items	11
5.10	Underpasses and Culverts also used by Pedestrians and Cyclists	12
5.11	Retaining Walls	12
6.	**REQUIREMENTS FOR STRUCTURAL MAINTENANCE**	**12**
6.1	General	12
6.2	Maintenance Files	13
6.3	Structural Maintenance Programme	13
6.4	Value Management of Structural Maintenance Programme	14
6.5	Structures Scheme Cost Estimating	15
7.	**STRUCTURAL ASSESSMENTS**	**15**
7.1	General	15

7.2	Structural Assessment Process	16
7.3	Structural Assessments in Progress	16
8.	**MANAGEMENT OF SUB-STANDARD STRUCTURES AND STRUCTURES WITH KNOWN DEFECTS**	**16**
8.1	General	16
8.2	Interim Measures and Monitoring	17
8.3	Strengthening and Replacement	17
9.	**ACCESS SYSTEMS**	**18**
9.1	General	18
9.2	Construction Design and Management	19
9.3	Temporary Access Systems	19
9.4	General and Principal Inspections of Access Systems	20
9.5	Access System Operations	20
10.	**THE TECHNICAL APPROVAL AND DEPARTURE FROM STANDARD PROCESS FOR STRUCTURES**	**21**
10.1	General	21
11.	**MANAGEMENT AND MAINTENANCE OF STRUCTURES WHERE AGREEMENTS EXIST WITH THIRD PARTIES**	**22**
12.	**BRIDGES WITH SIGNED LOW HEADROOM AND THOSE SUBJECT TO BRIDGE STRIKES BY OVERHEIGHT VEHICLES**	**22**

ANNEX 7.6/A – Maintenance Schedule Pro forma **23**

ANNEX 7.6/B – List of Structures Requiring Principal Inspections **29**

ANNEX 7.6/C – List of Structures Over or Carrying Watercourses which have been subject to a Stage 1 Scour Assessment **37**

ANNEX 7.6/D – List of Structures Over or Carrying Watercourses which have been subject to a Stage 2 Scour Assessment **41**

ANNEX 7.6/E – List of Structures subject to Assessment and Upgrading of Vehicle Parapets to Transport Scotland Interim Amendment No 25 **45**

ANNEX 7.6/F – List of Structures Subject to Identification of 'Particularly at Risk' Supports to Transport Scotland Interim Amendment No 29 **49**

ANNEX 7.6/G – Technical Approval Procedures for Assessment of Structures in Scotland **53**

ANNEX 7.6/H – List of Sub-Standard Structures with Structural Assessments in Progress **57**

ANNEX 7.6/I – List of Sub-Standard Structures **61**

ANNEX 7.6/J – List of Structures with Known Defects Requiring Monitoring which are Sub-Standard **65**

ANNEX 7.6/K – List of Structures with Known Defects Requiring Monitoring that are not Sub-Standard **69**

ANNEX 7.6/L – Strengthening and Replacement Programme for the Sub-Standard Structures **73**

ANNEX 7.6/M – Structures with Bridge Access Gantries and or Runway Beams **77**

ANNEX 7.6/N – List of Agreements with Third Parties that Affect Existing and Future Management, Maintenance and Replacement of Structures **81**

ANNEX 7.6/O – List of Bridges with Signed Low Headroom **85**

ANNEX 7.6/P – List of Structures subject to Frequent Bridges Strikes with dates of Incidents Since 2001 **89**

SCOTTISH MINISTERS' REQUIREMENTS

SCHEDULE 7 PART 6

MANAGEMENT AND MAINTENANCE OF STRUCTURES

1. INTRODUCTION

1.1 General

1.1.1 Transport Scotland's management and maintenance of Structures requirements follow the asset management principles set out in *Management of Highway Structures: A Code of Practice* and Transport Scotland's *Asset Management Plan.*

1.1.2 Details of all Structures for which the Director is responsible are contained in the structures management function of the Integrated Roads Information System.

1.1.3 This Part details the inspection and maintenance requirements to be undertaken by the Operating Company to:

(i) maintain Structures in good and safe repair,

(ii) ensure Structures are safe for use, fit for purpose and can carry current traffic loads, and

(iii) facilitate the planning and prioritisation of maintenance Operations and Special Inspections.

1.1.4 The requirements of this Part apply to Structures for which the Director is responsible as detailed in paragraph 1.1.2 of this Part.

1.1.5 The Operating Company shall include documented procedures in the Management System to deliver the requirements of this Part.

1.1.6 This Part covers the requirements for the management and maintenance of all Structures on the Unit, however Structures with particular requirements are further covered in Schedule 7 Part 7, which identifies these Structures and describes requirements for more particular or enhanced levels of management and maintenance.

2. MAINTENANCE MANAGEMENT

2.1 Structures Management

2.1.1 The Operating Company shall in accordance with the requirements of Schedule 5 Part 4 appoint:

(i) a Bridges Manager who shall be a member of the Operating Company's Core Management Team,

(ii) a Gantry Manager who shall report directly to the Bridges Manager to deliver the requirements of paragraph 9. *(Access Systems)* of this Part, and

(iii) a Major Bridge Manager (Forth Road Bridge) and a Major Bridge Manager (Queensferry Crossing) who shall report to the Bridges Manager as part of delivering the requirements of Schedule 7 Part 7.

2.2 The Structures Management Function of the Integrated Roads Information System

2.2.1 The structures management function of the Integrated Roads Information System is used to record the information and programmes relating to the management, monitoring and maintenance of existing and proposed Structures. The Operating Company shall use and update the structures management function of the Integrated Roads Information System in accordance with the procedures specified in the *Structures Management System user manual* and the *Transport Scotland Inspection Manual – Principal Inspections of Trunk Road Structures and Location System* as issued by the Director and as amended and re-issued by the Director from time to time. The structures management function of the Integrated Roads Information System shall be kept up to date by the Operating Company until the Service End Date.

2.2.2 The Operating Company shall update all data held in the structures management function of the Integrated Roads Information System, as follows:

(i) within three Working Days of becoming aware of any new data or changes to existing data, particularly after any inspections of Structures have been undertaken, and

(ii) within 28 days of existing Structures including sign gantries, having been:

(a) demolished or infilled,

(b) newly constructed,

(c) widened,

(d) maintained and subjected to remedial work, or

(e) strengthened and or improved.

2.2.3 The addition of Network 2 will require an expansion of the scope of updating activity for the structures management function of the Integrated Roads Information System. The Operating Company shall allow for this from Commencement of Service Date 2 onwards.

2.2.4 A separate and detailed location-based database or databases shall be produced and maintained by the Operating Company for the management and tracking of inspection Records, Defects and repairs on the Queensferry Crossing in accordance with the requirements of Schedule 7 Part 7.

2.3 Structures Maintenance Schedule

2.3.1 No later than 30 days prior to Commencement of Service Date 1, the Operating Company shall review the maintenance schedules of the previous operating company and the historical maintenance schedules of FETA to assist in the Operating Company's development of its own maintenance schedule for this Contract. Maintenance schedule duties shall be undertaken at least twice per year in each Annual Period as follows:

(i) at the end of the autumnal leaf fall (and no later than November), and

(ii) the beginning of summer (May or June),

and additionally when required.

2.3.2 No later than 30 days prior to Commencement of Service Date 1 and annually thereafter until 30 days prior to Commencement of Service Date 2, the Operating Company shall prepare a maintenance schedule and programme and submit them to the Director for written consent. The maintenance schedule shall itemise the maintenance requirements for each Structure and Access Systems associated with Network 1.

2.3.3 No later than 30 days prior to Commencement of Service Date 2 and annually thereafter until the Service End Date, the Operating Company shall prepare a maintenance schedule and programme and submit them to the Director for written consent. The maintenance schedule shall itemise the maintenance requirements for each Structure and Access Systems associated with Network 2.

2.3.4 The Operating Company shall ensure that it has sufficiently trained staff available to undertake the duties in the consented to maintenance schedule.

2.3.5 A summarised example of the maintenance schedule is provided in Annex 7.6/A of this Part and includes provisions for recording:

(i) the results of Structures Safety Inspections and tests,

(ii) the actions taken including the dates these were taken and completed,

(iii) the dates when maintenance is due to be carried out, and

(iv) the updates to the maintenance requirements until the Service End Date.

The maintenance schedule containing maintenance requirements for Structures, completion dates and changes to maintenance requirements throughout the Contract Period shall be held in the structures management function of the Integrated Roads Information System for monitoring and auditing purposes.

2.3.6 Until the Service End Date, the Operating Company shall update the maintenance schedule within five Working Days of undertaking any work with:

(i) the dates and details of the Structures Safety Inspections undertaken,

(ii) the dates and details of any tests carried out,

(iii) any other actions taken, and

(iv) the dates when further maintenance is required.

The Operating Company shall also update the maintenance schedule when changes to maintenance are required to comply with the requirements of this Part.

2.3.7 Before commencing maintenance activities identified in the maintenance schedule each year, the Operating Company shall submit a programme to the Director and the Performance Audit Group which identifies the number of maintenance activities which are programmed to be carried out each month.

2.4 Maintenance and Operations Manuals and Health and Safety Files

2.4.1 The Operating Company shall review and update annually all maintenance and operations manuals, maintenance procedures, inspection procedures and health and safety files for Structures. This review and update shall ensure all maintenance and operations manuals and health and safety files for Structures comply with current Legislation and safe working practices and contain any changes to the maintenance requirements of the Structures in respect of health and safety.

The Operating Company shall prepare a report detailing the findings and changes made as part of the annual review. This report shall be submitted to the Director within three Working Days of the completion of the review.

2.4.2 The Operating Company shall notify the Director of missing maintenance and operations manuals and missing health and safety files for Structures which should be available. Subject to an Order the Operating Company shall rectify such occurrences in accordance with the requirements of the Order.

2.4.3 No later than 15 Working Days after completion of any work to new or existing Structures by the Operating Company or by a Works Contractor, the Operating Company shall submit to the Director new and amended as-built Records, including as a minimum maintenance and operations manuals and health and safety files required by the *Design Manual for Roads and Bridges.*

2.4.4 The Operating Company shall develop maintenance, inspection and operation procedures for the Structures handed over as a part of Network 2 in accordance with the *Transport Scotland Interim Amendment No33 - General and Principal Inspections for Trunk Road Structures*. These shall be submitted to the Director for consent no later than 60 days before Commencement of Service Date 2.

3. INSPECTION REQUIREMENTS

3.1 General

3.1.1 The Operating Company shall undertake:

(i) Structures Safety Inspections,

(ii) General Inspections,

(iii) Principal Inspections,

(iv) Scour Inspections and Scour Assessments, and

(v) Special Inspections.

All inspections shall be undertaken in accordance with the standards and advice notes contained in the *Design Manual for Roads and Bridges* and the following Transport Scotland documents:

(i) *Transport Scotland Inspection Manual – Principal Inspections of Trunk Road Structures and Location System*,

(ii) *Structures Management System user manual*, and

(iii) *Inspections Further Data Collection Requirements*.

The inspection programme for a given Structure shall be determined by the timing of the previous inspections on the same Structure; new inspections shall be started in the sequence required and in time to provide inspection reports at the maximum interval specified in BD63, the *Transport Scotland Inspection Manual – Principal Inspection of Trunk Road Structures and Location System* and Schedule 7 Part 7.

Where the inspection of a Structure has to take place over more than one Annual Period, each annual programme shall be compiled in accordance with the timings of previous inspections while ensuring that the maximum interval for inspecting each structural element does not exceed the interval as determined in BD63 and Transport

Scotland Inspection Manual – Principal Inspection of Trunk Road Structures and Location System and Schedule 7 Part 7.

All Trunk Road Structures are subject to these inspection requirements, except where specifically excluded by the Director. All Principal Inspections of Structures with a span of greater than 10 metres shall be undertaken by a chartered civil or structural engineer.

Inspections for the Principal Crossings shall be carried out in accordance with the *Forth Road Bridge Engineering Manual* and the *Queensferry Crossing Inspection and Maintenance Manual* respectively, as described in Schedule 7 Part 7.

Inspections on Structures that are accommodation bridges for private users shall include the road surface on the Structure and for a further five metres beyond either end of the Structure, together with any provided surface water drainage. Vehicular restraint systems, where provided, shall be inspected for a minimum of 30 metres from each terminal or anchorage at the parapet interface.

3.1.2 No later than 30 days prior to Commencement of Service Date 1 and annually thereafter until 30 days prior to Commencement of Service Date 2, the Operating Company shall prepare an inspection schedule and programme and submit them to the Director for written consent. The maintenance schedule shall itemise the inspections for each Structure and Access Systems associated with Network 1.

3.1.3 No later than 30 days prior to Commencement of Service Date 2 and annually thereafter until the Service End Date, the Operating Company shall prepare an inspection schedule and programme and submit them to the Director for written consent. The inspection schedule shall itemise the maintenance requirements for each Structure and Access Systems associated with Network 2.

3.2 Structures Safety Inspections

3.2.1 Structures Safety Inspections shall be undertaken by the Operating Company at the same time as other inspection and maintenance duties.

Structures Safety Inspections shall be undertaken to identify any deficiencies which, if not rectified, represent or may result in:

(i) a danger to the public and which therefore require immediate or urgent action,

(ii) accidents,

(iii) deterioration or behaviours indicating a reduction in load carrying capacity, and

(iv) high repair costs.

3.2.2 The Operating Company shall undertake two types of Structures Safety Inspections:

(i) random, and

(ii) reactive.

The Operating Company shall undertake random Structures Safety Inspections during maintenance of Structures at intervals not exceeding 7 days. When undertaking the random Structures Safety Inspection the Operating Company shall:

(i) observe the Structure,

(ii) record any signs of problems or deficiencies, and

(iii) report them to the Bridges Manager.

The Operating Company shall undertake reactive Structures Safety Inspections after a problem or deficiency has been observed or reported by:

(i) any of the Operating Company's staff, or

(ii) the police or the public,

and report them to the Bridges Manager.

The Operating Company shall submit a monthly report to the Director's bridges manager detailing the findings of all random and reactive Structures Safety Inspections.

3.2.3 The Operating Company shall identify, classify and record Defects observed as either Category 1 or Category 2 Defects in accordance with the requirements of Schedule 7 Part 1. The Operating Company shall take action appropriate to the category and severity of such Category 1 or Category 2 Defects. This rating system is separate and different from the defects rating system in *Transport Scotland Inspection Manual – Principal Inspections of Trunk Road Structures and Location System*.

3.3 General Inspections

3.3.1 For Structures other than the Principal Crossings, the Operating Company shall undertake General Inspections at intervals not exceeding two years. This shall exclude any Structures on which a Principal Inspection has been carried out during the same Annual Period in which the General Inspection is due to be conducted.

3.3.2 The programme of General Inspections for each Structure shall be coordinated with the programme of Principal Inspections for each Structure using the following continuous six year inspection cycle:

(i) Principal Inspection,

(ii) General Inspection two years later,

(iii) General Inspection four years later, and

(iv) Principal Inspection six years later.

The Operating Company shall use the existing cycle of inspections undertaken by the previous operating company or historically by FETA as the basis for developing and implementing an inspection programme that shall meet these inspection requirements.

Before commencing General Inspections each year the Operating Company shall submit a programme which identifies the number of inspections which are programmed to be carried out each month to the Director and the Performance Audit Group.

3.3.3 When undertaking General Inspections, the Operating Company shall record the condition of every part of a Structure visible from the ground and deck level and, where necessary, access confined spaces including box girders and culverts.

General Inspections shall be recorded on a pro forma provided within the structures management function of the Integrated Roads Information System. For any Defects found, the Defect description and priority ranking used shall be in accordance with the requirements in *The Inspection Manual for Highways Structures Volume 1* and the

Transport Scotland Inspection Manual – Principal Inspections of Trunk Road Structures and Location System.

3.4 Principal Inspections

3.4.1 Structures for which Principal Inspections are required are listed within the structures management function of the Integrated Roads Information System and in Annex 7.6/B of this Part. Details of the year in which the next Principal Inspection is due for each Structure are provided in Annex 7.6/B of this Part where this is known.

The Operating Company shall undertake Principal Inspections during the specified year for Structures listed in Annex 7.6/B of this Part at intervals not greater than six years after the preceding Principal Inspection. Principal Inspections shall include access to confined spaces within relevant Structures including box girders and culverts. Unless requested otherwise by the Director, the result of a Principal Inspection shall be recorded within the structures management function of the Integrated Roads Information System.

Before commencing Principal Inspections each year the Operating Company shall submit a programme which identifies the number of inspections which are programmed to be carried out each month to the Director and the Performance Audit Group.

3.5 Scour Inspections and Assessments

3.5.1 For Structures over or carrying watercourses, checks for scour shall be carried out as part of a General Inspection and Principal Inspection in accordance with BD63 of the *Design Manual for Roads and Bridges*.

3.5.2 The Operating Company shall, in accordance with BD63 of the *Design Manual for Roads and Bridges*, check for scour as part of General Inspections and Principal Inspections for structures over or carrying watercourses. Prior to carrying out a Principal Inspection or General Inspection, the Operating Company shall review any previous stage 1 and stage 2 Scour Assessments undertaken in accordance with BD97 and or BA74 of the *Design Manual for Roads and Bridges* so that any changes in conditions can be identified during the Principal Inspection or General Inspection. Subject to an Order, the Operating Company shall revise previous stage 1 and stage 2 Scour Assessments to quantify any changes in condition. The Operating Company shall assess the potential for scour and record any observations as part of General Inspections and Principal Inspections. Details of scour observed at General Inspection or Principal Inspection shall be included in the General Inspection or Principal Inspection report.

3.5.3 Inspections for Scour Assessments shall be undertaken in accordance with BD97 of the *Design Manual for Roads and Bridges* and require a two stage approach to identify those Structures where the potential risk of scour is considered high. All Structures over or carrying watercourses are listed in Annex 7.6/C of this Part and have been identified for stage 1 assessment in accordance with BD97 and or BA74 of the *Design Manual for Roads and Bridges*.

In accordance with *Design Manual for Roads and Bridges,* the Operating Company shall ensure that the individual undertaking the inspection shall have the required knowledge and experience.

3.5.4 For Structures where a stage 1 Scour Assessment is required, the Operating Company shall undertake a Scour Inspection and collect the data regarding the Structure, its foundations, the river and any information on the history of the Structure and any previous scour history. Where a risk of scour is identified, a stage 2 Scour Assessment shall be required.

3.5.5 A stage 2 Scour Assessment shall involve a calculation of the potential scour depths and an assessment of priority rating. Existing Structures that have had a stage 2 Scour Assessment are listed in Annex 7.6/D of this Part.

3.5.6 The need for additional Scour Inspections to Structures after periods of heavy rainfall shall be assessed by the Operating Company as a reactive Structures Safety Inspection and, where required, a Special Inspection shall be undertaken.

3.5.7 In addition to the requirements of paragraph 3.5.3 of this Part, when required by BD97 of the *Design Manual for Roads and Bridges*, the Director shall issue an Order for the Operating Company to undertake stage 1 and stage 2 Scour Assessments of a Structure.

3.6 Special Inspections

3.6.1 The Operating Company shall undertake Special Inspections to investigate particular concerns rather than at programmed intervals. With the exception of the Special Inspections set out in paragraph 2.2.8 of Schedule 7 Part 7 undertaking Special Inspections shall be subject to an Order.

3.6.2 Special Inspections shall generally be undertaken by the Operating Company to investigate a Defect identified during a General Inspection or Principal Inspection. Additionally underwater inspections may, subject to an Order, be required for bridge foundations.

3.7 Weather Resistant Steel Bridge Monitoring

3.7.1 The Operating Company shall undertake the management and monitoring of Structures incorporating weather resistant steel in accordance with:

(i) the *Design Manual for Roads and Bridges*, and

(ii) the requirements for carrying out and reporting General and Principal Inspections referred to in paragraphs 3.3 and 3.4 of this Part.

3.7.2 Structures incorporating weather resistant steel which require monitoring are listed within the structures management function of the Integrated Roads Information System. The system contains data on the year in which the next Principal Inspection is due and the last year in which the steel thickness measurements were taken.

3.7.3 The Operating Company shall ensure that steel thickness measurement data is recorded, stored and presented in Principal Inspection reports in order that corrosion trends are apparent. Only certified calibrated gauges may be used. The structures management function of the Integrated Roads Information System contains data on the measurements, locations and previously measured steel thicknesses. The Operating Company shall use such data to monitor the corrosion trends and report on them in the relevant Principal Inspection reports.

3.7.4 The Operating Company shall measure, record, store and present the results of the actual steel thicknesses at the critical locations as in the Principal Inspection reports.

3.7.5 The Operating Company shall incorporate in its General Inspection procedures a visual inspection procedure of the critical areas where measurements are taken and areas prone to corrosion, particularly in the vicinity of all deck joints, at intervals not exceeding two years.

4. MONITORING REQUIREMENTS

4.1 General

4.1.1 The Operating Company shall on a 24 hour, 365 days per year basis undertake the monitoring of the following:

(i) The Supervisory Control and Data Acquisition System on the Queensferry Crossing including the information and reports generated,

(ii) The Structural Health Monitoring System on the Queensferry Crossing including the information and reports generated,

(iii) Fire alarm, CCTV and detection systems,

(iv) Access Systems,

(v) Lighting systems including navigation and obstruction lighting,

(vi) Building systems,

(vii) Security systems,

(viii) The de-humidification system for the main cables and deck box of the Forth Road Bridge including the information and reports generated,

(ix) The acoustic monitoring system for the main cables of the Forth Road Bridge including all information and reports generated,

(x) Other Structures with specific monitoring requirements not specifically related to Defects including, but not limited to, periodically checking the BP pipeline protection structures for stray currents, and

(xi) The architectural lighting system and the updating of zone and scene settings.

4.1.2 All monitoring activities shall be undertaken in accordance with the requirements set out in Schedule 7 Part 7.

5. REQUIREMENTS FOR MAINTENANCE OF STRUCTURES

5.1 General

5.1.1 The maintenance of Structures and any associated Access Systems comprises activities relating to servicing of the Structure. Maintenance shall be undertaken regularly or at pre-determined intervals in accordance with the relevant operations manual, log book or maintenance schedule.

The maintenance of Structures does not cover the repair or renewal of structural elements or components that have become unserviceable due to general wear and tear or which have deteriorated with time and usage or which have been damaged. Any requirement for such repair or renewal work shall be identified by the Operating Company during inspections and assessments and included in the structural maintenance programme detailed in paragraph 6 of this Part.

5.1.2 The Operating Company shall carry out maintenance of Structures as required, and at least twice per year, to meet the requirements of this Part.

5.1.3 All graffiti shall be dealt with in accordance with the requirements of Schedule 7 Part 1.

5.2 Substructures and Superstructures

5.2.1 The Operating Company shall undertake maintenance of substructures and superstructures in accordance with the Specification and the relevant maintenance manuals.

5.3 Expansion Joints

5.3.1 The Operating Company shall undertake maintenance of expansion joints in accordance with the Specification and the relevant maintenance manuals and in addition shall report any Category 1 Defects immediately to the Director for further investigation and repair.

5.4 Drainage Systems

5.4.1 The Operating Company shall undertake maintenance of drainage systems including carriageway drainage on or adjacent to Structures in accordance with the Specification and the relevant maintenance manuals and shall include clearing drainage outlet manholes and other drainage systems and facilities within the Unit. The Operating Company shall report any Category 1 Defects immediately to the Director for further investigation and repair.

5.5 Parapets and Pedestrian Protection on Structures

5.5.1 The Operating Company shall undertake maintenance of parapets and pedestrian protection on Structures in accordance with the Specification and the relevant maintenance manuals and in addition shall report any Category 1 Defects immediately to the Director for further investigation and repair.

5.6 Bearings and Bearing Shelves

5.6.1 The Operating Company shall undertake maintenance of bearings and bearing shelves in accordance with the Specification and the relevant maintenance manuals and in addition shall report any Category 1 Defects immediately to the Director for further investigation and repair.

5.7 Structures Over or Conveying Watercourses

5.7.1 The Operating Company shall undertake maintenance of Structures over or conveying watercourses in accordance with the Specification and the relevant maintenance manuals. It shall include all the requirements detailed in paragraphs 5.1 to 5.6 and 5.9 of this Part.

5.8 Sign and or Signal Gantries, High Mast Lighting and other Masts

5.8.1 The Operating Company shall undertake maintenance of the non electrical components of sign gantries, signal gantries, high mast lighting and other masts where not already covered by Schedule 7 Part 1, in accordance with the Specification and the relevant maintenance manuals and in addition shall report any Defects immediately to the Director for further investigation and repair.

5.9 Non-structural Items

5.9.1 Non-structural items exclude Access Systems associated with Structures. Non-structural items include as a minimum:

(i) access stairs,

(ii) access walkways,

(iii) access platforms,

(iv) hinges,

(v) doors,

(vi) deck drainage components and steelwork,

(vii) ladders,

(viii) pumps,

(ix) access chambers,

(x) sumps,

(xi) grills,

(xii) trash screens,

(xiii) access covers,

(xiv) watergates,

(xv) canopies,

(xvi) wrapping to cables,

(xvii) stay cable ducts,

(xviii) stay cable dampers,

(xix) CCTV camera systems,

(xx) Security systems,

(xxi) Aviation and aircraft warning lighting,

(xxii) Architectural lighting,

(xxiii) De-humidification equipment,

(xxiv) Acoustic monitoring equipment,

(xxv) Supervisory Control and Data Acquisition System,

(xxvi) Structural Health Monitoring System,

(xxvii) Other mechanical and electrical equipment,

(xxviii) ventilation ducts and grills, and

(xxix) ancillary lighting connected with the above.

5.9.2 The Operating Company shall undertake maintenance of non-structural items associated with Structures in accordance with Schedule 7 Part 7 and the Specification.

5.9.3 The Operating Company shall ensure that all non-structural items associated with Structures operate effectively.

5.10 Underpasses and Culverts also used by Pedestrians and Cyclists

5.10.1 The Operating Company shall undertake maintenance of underpasses and culverts used by pedestrians, cyclists and other road users in accordance with the Specification.

5.11 Retaining Walls

5.11.1 The Operating Company shall undertake maintenance of retaining walls in accordance with the Specification.

6. REQUIREMENTS FOR STRUCTURAL MAINTENANCE

6.1 General

6.1.1 Structural maintenance shall include the repair, renewal and replacement of structural elements or components that have become unserviceable through wear and tear or deteriorated with time and usage or which have been damaged.

6.1.2 Structural maintenance shall include the upgrading of Structures to bring specific elements and components of Structures up to current requirements, including safety and durability standards.

6.1.3 The Operating Company shall determine the structural maintenance requirements from the results of:

(i) Structures Safety Inspections,

(ii) General Inspections,

(iii) Principal Inspections,

(iv) Special Inspections,

(v) Scour Inspections,

(vi) Scour Assessments,

(vii) Bridge Assessments,

(viii) Reports and information relating to the Structural Health Monitoring System on the Queensferry Crossing,

(ix) Reports and information relating to the de-humidification system for the main cables of the Forth Road Bridge,

(x) Reports and information relating to the acoustic monitoring system of the Forth Road Bridge,

(xi) Reports and information for Structures with particular monitoring requirements,

(xii) Maintenance programmes historically undertaken by FETA and maintenance programmes undertaken by the previous Operating Company,

(xiii) the Transport Scotland Structures Workbank, as advised by the Director, and

(xiv) any other special programmes or assessments advised or subject to an Order including, but not limited, to, parapet and vehicle restraint system assessments and at-risk pier assessments.

6.1.4 Recommendations for structural maintenance Operations shall be submitted to the Director by the Operating Company as part of the annual Bids and programme process in accordance with the requirements of Schedule 4 Part 1.

6.2 Maintenance Files

6.2.1 The Bridges Manager shall keep structural maintenance files for each Structure at the Central Office. These shall be in paper and Electronic Copy and referenced by route name, the junctions between which they are located, and national Ordnance Survey grid coordinates.

Maintenance files for Structures shall contain:

(i) copies of all inspections together with details of structural maintenance and repair, and

(ii) Drawings and Records showing:

(a) location and extent of structural maintenance Operations and Works,

(b) materials employed,

(c) date of implementation,

(d) details of Works Contractors and subcontractors employed, and

(e) costs of Operations and Works.

6.3 Structural Maintenance Programme

6.3.1 The Bridges Manager shall review:

(i) inspection, assessment, special investigation and feasibility reports for Structures and Access Systems,

(ii) reports and information relating to the monitoring and management of sub-standard Structures,

(iii) monitoring requirements for Structures with known Defects,

(iv) test results and known strengthening and replacement requirements,

(v) Reports and information relating to the Supervisory Control and Data Acquisition System and its subsystems on the Queensferry Crossing,

(vi) Reports and information relating to the Structural Health Monitoring System on the Queensferry Crossing,

(vii) Reports and information relating to the de-humidification system for the main cables of the Forth Road Bridge,

(viii) Reports and information relating to the acoustic monitoring system of the Forth Road Bridge,

(ix) Reports and information for Structures with particular monitoring requirements,

(x) the Transport Scotland Structures Workbank,

(xi) special programmes,

(xii) previous maintenance programmes and procedures, and

(xiii) any other special programmes or assessments advised or subject to an Order,

and identify and prioritise:

(i) maintenance, strengthening and replacement Operations required for Structures, non structural items and any associated Access Systems,

(ii) Special Inspections, Scour Inspection and Scour Assessments,

(iii) at-risk pier assessments,

(iv) parapet and vehicle restraint system assessments,

(v) effectiveness of windshielding and noise barriers,

(vi) Structures assessments and interim and formal measures for sub-standard Structures,

(vii) additional monitoring over and above that identified in paragraph 4 of this Part and Schedule 7 Part 7,

(viii) Defect repair criteria and strategies,

(ix) monitoring requirements for Structures with known Defects, and

(x) any other special programmes or assessments advised or subject to an Order,

for inclusion in the annual Bids and programmes process.

6.4 Value Management of Structural Maintenance Programme

6.4.1 In addition to preparing the structural maintenance programme set out in paragraphs 5.1 to 5.3 of this Part, the Operating Company shall prioritise and rank all the Schemes in such programmes as well as Schemes with priority three and four work as designated in the *Transport Scotland Inspection Manual – Principal Inspections of Trunk Road Structures & Locations System*, Part A - A13 arising from Principal and General Inspections undertaken in an inspection year. This shall be done using the techniques described in *Maintenance and Making Better Use – Value Management of the Structures Renewal Programme – Amended for Transport Scotland*.

The output from the value management prioritisation as set out above shall be submitted to the Director for his written consent and form the basis of the following year's programme. The Director shall consider the output of the prioritisation along with any other Schemes to be included in the programme, which shall be prioritised and ranked. All programmes shall be submitted in accordance with the dates set out in the annual process described in Schedule 4 Part 1 as a stage 1 submission.

For the Principal Crossings, Scheme and maintenance ranking shall be done using the techniques and ratings systems described in the *Forth Road Bridge Engineering Manual* and the *Queensferry Crossing Inspection and Maintenance Manual*.

6.4.2 The Director may, from time to time and at his own discretion, review, change and re-prioritise the Schemes to be included in the consented to programme.

6.5 Structures Scheme Cost Estimating

6.5.1 All Structures Scheme cost estimates, shall be reviewed by the Operating Company and if required, revised prior to undergoing value management as set out in paragraph 6.4 of this Part.

6.5.2 All Structures Scheme cost estimates shall be developed in line with the requirements of this Contract. Where the scope of work changes, Scheme cost estimates shall be revised to ensure they reflect the change in scope and are accurate. The Operating Company shall, when requested, provide the Director with the current scope of work and accurate cost estimate to be used for value management as set out in paragraph 6.4 of this Part.

7. STRUCTURAL ASSESSMENTS

7.1 General

7.1.1 Structural assessments and the resulting required actions are essential in ensuring that all Structures remain in a safe and serviceable state. The Operating Company shall inform the Director immediately of any issue or deterioration identified as a result of a structural assessment that has a detrimental effect on the load carrying capacity of a Structure.

7.1.2 Subject to an Order, the Operating Company shall undertake:

(i) structural assessments required due to increases in vehicle loadings above those used in the design of a Structure,

(ii) assessment of a Structure or part of a Structure that is noted in an inspection to have deteriorated, and whose design or assessed load carrying capacity may have been reduced,

(iii) assessment of Structures without HB ratings,

(iv) assessment and upgrading of vehicle parapets in accordance with *Transport Scotland Interim Amendment No 25*,

(v) a two stage structural review and assessment of all Trunk Road Structures during this Contract for the purpose of establishing or confirming the validity of the latest assessment, or their original design if there has been no subsequent assessment,

(vi) identification and assessment of 'particularly at risk' supports in accordance with *Transport Scotland Interim Amendment No 29*, and

(vii) Assessment of the Queensferry Crossing or Forth Road Bridge as a result of an extreme loading event or as a result of an event identified by the Structural Health Monitoring System of the Queensferry Crossing.

7.1.3 The Operating Company shall assess a Structure or part of a Structure whenever it is damaged.

7.1.4 Structural reviews and assessments shall be undertaken on a six year cycle to coincide with a Principal Inspection, the requirements of Schedule 7 Part 7 or when subject to an Order.

7.1.5 Annexes 7.6/E and 7.6/F of this Part provide details on vehicle parapets and bridge supports with assessments in progress, or which require upgrading or which are under review and may require further detailed assessment.

7.2 Structural Assessment Process

7.2.1 The Operating Company shall follow the procedure referred to in Annex 7.6/G of this Part to obtain Technical Approval for structural assessments.

7.2.2 Subject to an Order, the Operating Company shall undertake structural assessments to level one to three as consented to by the Director in accordance with the assessment requirements in the *Design Manual for Roads and Bridges*.

7.2.3 The Director may, at his discretion and subject to an Order, require the Operating Company to undertake level four and five assessments that require specialist knowledge and expertise using appropriately experienced assessing engineers.

7.3 Structural Assessments in Progress

7.3.1 Subject to an Order, where a structural assessment is in progress at Commencement of Service Date 1, the Operating Company shall undertake the completion of the assessment to the level of assessment consented to by the Director.

7.3.2 The Operating Company shall inform the Director of any identified assessment that cannot be completed before the end of the final Annual Period prior to undertaking any work on the assessment. The Director shall decide:

(i) if the Operating Company is required to undertake the identified assessment, or

(ii) if he wishes to make alternative arrangements outwith the Operating Company's arrangements for undertaking the identified assessment.

7.3.3 Subject to the requirements in paragraph 6.3.2, the Operating Company shall complete all structural assessments in progress no later than the end of the final Annual Period. The Operating Company shall not initiate any new assessments that may continue beyond the end of the final Annual Period.

7.3.4 Annex 7.6/H of this Part lists sub-standard Structures with assessments in progress at the start of the first Annual Period or which are under review and may require structural assessment.

8. MANAGEMENT OF SUB-STANDARD STRUCTURES AND STRUCTURES WITH KNOWN DEFECTS

8.1 General

8.1.1 The Operating Company shall undertake the management of sub-standard Structures and the management of Structures with known Defects in order to:

(i) maintain public safety, and

(ii) enable sub-standard Structures to remain in service whilst further assessments are carried out and until any replacement or strengthening is completed or the Structure is no longer deemed sub-standard.

These obligations may change during the Contract Period and any additional obligations shall be subject to an Order.

The Operating Company shall manage sub-standard Structures in accordance with the requirements of the *Design Manual for Roads and Bridges.*

8.2 Interim Measures and Monitoring

8.2.1 All Structures that are sub-standard or require monitoring are listed within the structures management function of the Integrated Roads Information System. A summary of sub-standard Structures is also provided in Annex 7.6/I of this Part. Annex 7.6/J of this Part lists Structures with known Defects requiring monitoring which are sub-standard and Annex 7.6/K of this Part lists Structures with known Defects requiring monitoring that are not sub-standard.

8.2.2 The interim measures pro formas within BD79 of the *Design Manual for Roads and Bridges* shall be used by the Operating Company in relation to sub-standard Structures or Structures with known Defects. Details of the current assessments and monitoring, interim and permanent measures that have been or shall be applied to sub-standard Structures are recorded in the structures management function of the Integrated Roads Information System for each sub-standard Structure.

8.2.3 The Operating Company shall be responsible for ensuring that all sub-standard Structures and Structures with known Defects have appropriate assessment ratings, monitoring regimes and agreed interim and planned permanent measures in place.

8.2.4 The Operating Company shall review in each Annual Period each sub-standard Structure and its associated interim measures pro forma and each Structure with known Defects. The Operating Company shall undertake appropriate monitoring and maintain interim measures in place until appropriate work is implemented or the Structure is assessed as adequate or has been strengthened or replaced. The Operating Company shall submit proposals for monitoring and maintaining interim measures in accordance with paragraph 8.2.5 of this Part for the Director's consent. If, at any time, any Structure is categorised as an immediate risk Structure in accordance with the *Design Manual for Roads and Bridges*, the Operating Company shall inform the Director and shall implement the necessary safety and interim measures immediately.

8.2.5 The Operating Company shall submit all proposals and changes, including:

(i) any new monitoring and interim measures,

(ii) amendments to the existing monitoring measures,

(iii) where the existing structural assessment rating may no longer be valid and the Structure requires re-assessment in accordance with paragraph 6 of this Part,

(iv) strengthening and replacement work, and

(v) the cessation of monitoring,

for the written consent of the Director.

8.3 Strengthening and Replacement

8.3.1 The Director shall determine the programme and funding for strengthening and replacement of sub-standard Structures and Structures that are beyond their service life or Structures that require replacement for other reasons.

8.3.2 The proposed strengthening and replacement programme is provided in Annex 7.6/L of this Part. The programme is subject to the funding of competing priorities and is controlled by the Director.

Schemes arising from the strengthening and replacement programme are subject to the requirements of paragraphs 5.4 and 5.5 of this Part, which shall be undertaken by the Operating Company.

The Operating Company shall provide such advice as may be requested by the Director to enable him to prioritise this work.

9. ACCESS SYSTEMS

9.1 General

9.1.1 The Operating Company's Gantry Manager shall supervise the use of all Access Systems and carry out the duties referred to in this paragraph.

9.1.2 Structures listed in Table 7.6.M.1 of Annex 7.6/M of this Part have Access Systems which may be used by the Operating Company to gain access for inspection and maintenance Operations.

9.1.3 Structures listed in Table 7.6.M.2 of Annex 7.6/M of this Part have permanent bridge access gantries, runway beams and other Access Systems. The Operating Company shall ensure that they remain certified for use until the Service End Date unless that need is explicitly excluded in Schedule 7 Part 7, in which case certification shall be carried out according to need.

9.1.4 The Operating Company shall be responsible for the inspections, testing, maintenance and operation of any Access Systems, including those listed in Annex 7.6/M of this Part. The Operating Company shall ensure that prior to use, all Access Systems comply in all respects with manufacturer’s recommendations and maintenance manuals for those systems and with Legislation and standards including as a minimum:

(i) British Standard 6037: Code of practice for the planning, design, installation and use of permanently installed access equipment, or equivalent,

(ii) British Standard 5974: Temporary installed suspended scaffolds and access equipment or equivalent,

(iii) British Standard EN 1808: Safety requirements on suspended access equipment – design calculations, stability criteria, construction, or equivalent, and

(iv) All requirements and recommendations in *The Operation and Maintenance of Bridge Access Gantries and Runways*. *(Second Edition 2007)* published by the Institution of Structural Engineers.

9.1.5 The Operating Company shall be responsible for and provide:

(i) method statements for inspections, maintenance and testing,

(ii) certification, and

(iii) operations, maintenance and inspection logs and health and safety files,

in relation to all Access Systems.

9.1.6 Where available, the Director shall provide the Operating Company with operations and maintenance manuals and manufacturers' instructions in relation to Access Systems.

9.1.7 The Operating Company shall permit the use of Access Systems to allow Undertakers to inspect and maintain their plant and equipment where this is fixed to a Structure.

The Operating Company shall liaise with, supervise and accompany all:

(i) Statutory Authorities,

(ii) Undertakers,

(iii) authorised contractors, and

(iv) other interested third parties,

who are using the Access Systems.

9.1.8 The Operating Company shall ensure that routine inspection and testing and periodic electrical inspections and testing of the Access Systems including as a minimum testing of runway beams are carried out in accordance with the operations and maintenance manuals and manufacturer's recommendations. Certificates shall be held on the health and safety file for the work. The Operating Company shall also ensure that the gantry operations and maintenance manual is kept up to date with the following:

(i) design and check Certificates for access gantries and runway beams, which shall be signed by a chartered engineer,

(ii) an electrical installation completion Certificate in relation to any electrical work that is undertaken on the gantry in accordance with British Standard 7671: 1992,

(iii) periodic electrical inspections and testing carried out on existing installations, and

(iv) test Certificates for all lifting devices and the system as a whole.

9.1.9 The Operating Company shall undertake all inspection and testing as set out in paragraph 9.1.8 regardless of whether they intend to use the Access Systems or not unless a system is specifically exempted from permanent certification in Schedule 7 Part 7. Inspection and testing will still be necessary if exempted systems are to be used.

9.2 Construction Design and Management

9.2.1 In accordance with Schedule 6 Part 2 the CDM Co-ordinator appointed by the Operating Company shall ensure that a construction phase plan covering all Works or Operations relating to or requiring the use of any Access Systems is prepared.

The principal contractor appointed by the Operating Company for any Works or Operations utilising the Access System shall develop each construction phase plan and prepare a full and detailed method statements to cover the specific Operations involved on Site.

9.3 Temporary Access Systems

9.3.1 Where a temporary access platform is installed, or equipment supported or attached to the permanent Structure, the Operating Company shall satisfy itself regarding:

(i) the competence of the Designer and contractor for the Design, installation and operation of the temporary Access System and equipment, and

(ii) ensuring that the existing Structure has been assessed and certified as adequate to support all loading conditions resulting from the installation and operation of the temporary Access Systems.

9.3.2 Before any temporary Access System is used, the Operating Company shall ensure that the:

(i) Design, installation and required certification for the temporary Access System, and

(ii) the associated operations manual, incorporating all health and safety procedures,

is up to date and in accordance with current regulations and standards.

9.4 General and Principal Inspections of Access Systems

9.4.1 General and Principal Inspections shall be carried out on all Access Systems, whether they are gantries, cradles, shuttles or suspended scaffold installations. The inspections shall be reported separately but in the same format to those undertaken on the Structure at two year and six year intervals or as recommended in the appropriate document called up in 9.1.4 of this Part.

9.4.2 The Operating Company shall maintain an inspection regime and register for suspended scaffolding installations. This shall be placed on the health and safety file for the work and, where the scaffold is not temporary, added to the maintenance manual for the structure in question.

9.4.3 For new temporary or permanent access installations, or for existing systems that are brought back into use, the Operating Company shall provide the appropriate design and check Certificates which shall be placed on the relevant health and safety file. These shall be signed by a chartered civil or chartered structural engineer where they relate to any suspended Access System installation.

9.5 Access System Operations

9.5.1 The Operating Company shall ensure that its management procedures are in place at the commencement of service dates for each of Network 1 and Network 2 as appropriate and kept up to date for the operation and maintenance of all Access Systems. Such Access Systems are listed in Annex 7.6/M of this Part and shall be maintained in a certified and serviceable state whether mounted on the Structure or not. Details of operational, inspection and maintenance procedures and required staffing levels shall be included in each of the gantry operations and maintenance manuals and this information shall be updated regularly until the Service End Date. Procedures and the keeping of operating, inspection and maintenance Records shall be regularly reviewed in accordance with the requirements and recommendations of the document "*The Operation and Maintenance of Bridge Access Gantries and Runways*. *(Second Edition 2007)"* published by the Institution of Structural Engineers.

9.5.2 The Operating Company shall ensure that the Gantry Manager and gantry operators receive any training necessary for the management and operation of the existing Access Systems and for any new system that is commissioned. Other persons, including those not employed by the Operating Company, having a justifiable

requirement for access onto such systems shall also be trained and inducted by the Operating Company. Records of training together with the assessment of the suitability of the selected personnel shall be retained by the Operating Company. The Gantry Manager shall be responsible for the control of gantry operations and for ensuring that operations and maintenance manuals are reviewed at regular intervals and kept up to date.

9.5.3 The Operating Company shall ensure that in the event of emergencies or Access System breakdown, a safe means of exiting the Access System is available at all locations. Each operational Access System shall include the appropriate safety and first aid equipment as identified through risk assessment by the Gantry Manager.

9.5.4 Where required by the operation and maintenance manuals, Access Systems shall be removed from the Structure and placed in storage by the Operating Company.

10. THE TECHNICAL APPROVAL AND DEPARTURE FROM STANDARD PROCESS FOR STRUCTURES

10.1 General

10.1.1 The Operating Company shall submit approval in principle forms and applications for departures from standards forms for Structures to the Director for consent using the forms provided in Schedule 6 Part 4.

10.1.2 Applications for departures from standards shall allow adequate time for consideration by the Director. Such departures shall be requested prior to their inclusion in the approval in principle form or an addendum to the approval in principle form. Departures from standards which have been consented to by the Director shall be included within the approval in principle submission in accordance with the requirements of Schedule 6 Part 4.

10.1.3 No later than 25 Working Days after receipt of the Operating Company's approval in principle submission and departure from standards submission, the Director shall:

(i) consent to the submission in writing, or

(ii) reject the submission in writing with reasons, or

(iii) request the Operating Company to supply further information within five Working Days.

If the Director requests the Operating Company to supply further information, the minimum period of approval will be extended by five Working Days commencing on receipt of the additional information.

If the Operating Company cannot provide the additional information within five Working Days, it shall contact the Director to agree an alternative timeframe.

If the approval in principle submission is rejected by the Director, the period of approval of 25 Working Days shall recommence on receipt of the redrafted submission.

Where the Director is unable for any reason to meet this timescale, he shall notify the Operating Company in writing. The Operating Company shall not be entitled to any additional payment if the Director is unable to meet the timescales referred to.

11. MANAGEMENT AND MAINTENANCE OF STRUCTURES WHERE AGREEMENTS EXIST WITH THIRD PARTIES

11.1.1 The Operating Company shall familiarise itself with any agreements the Scottish Minister has with third parties which may impact upon the management, maintenance and replacement of Structures. Any agreement between FETA and a third party will transfer to the Scottish Ministers at Commencement of Service Date 1. Annex 7.6/N of this Part lists agreements with third parties and provides a brief description.

12. BRIDGES WITH SIGNED LOW HEADROOM AND THOSE SUBJECT TO BRIDGE STRIKES BY OVERHEIGHT VEHICLES

12.1.1 Bridges with clearances below 5.03 metres have signs identifying the maximum safe vehicle height which may pass beneath.

High vehicles are classified as those which:

(i) cannot pass safely under a bridge with the standard minimum headroom clearance of 5.03 metres, or

(ii) have a vehicle and load combination greater than 4.95 metres in height, allowing for the minimum safety margin of 0.275 metres.

12.1.2 The Operating Company shall implement the requirements of the following documents, as part of its procedures and Incident Response Plans, to deal with bridges strike Incidents within the Unit:

(i) Response *to a Bridge Strike over the Railway – A Protocol for Highway and Road Managers and Bridge Owners,* and

(ii) *Prevention of Strikes on Bridges over Highways – A Protocol for Highway and Road Managers and Bridge Owners.*

12.1.3 Structures with signed low headroom are listed within the structures management function of the Integrated Roads Information System and in Annex 7.6/O of this Part.

12.1.4 Structures within the Unit which are subject to frequent bridge strikes, together with the dates of when previous strikes have occurred, are listed within the structures management function of the Integrated Roads Information System and in Annex 7.6/P of this Part.

This is Annex 7.6/A to Schedule 7 Part 6 referred to in the foregoing Agreement between Scottish Ministers and Amey LG Limited.

SCOTTISH MINISTERS' REQUIREMENTS

SCHEDULE 7 PART 6

MANAGEMENT AND MAINTENANCE OF STRUCTURES

ANNEX 7.6/A – Maintenance Schedule Pro forma

SCOTTISH MINISTERS' REQUIREMENTS

SCHEDULE 7 PART 6

MANAGEMENT AND MAINTENANCE OF STRUCTURES

ANNEX 7.6/A – Maintenance Schedule Pro forma

	Name	Organisation	Signature	Date
Prepared By				
Checked By				
Authorised By				

REVISION STATUS				
REV.	DATE	Revision Details	Checked	Authorised

CONTROLLED DOCUMENT HOLDER	
Ref	Name of Holder
1	
2	
3	
4	
5	
6	
7	
8	
9	
10	

Maintenance Activity Code	Clause No.	Maintenance Activities
RCM 1	**6110AR** **6112AR** **6117AR**	**Substructure and Superstructure** - Vegetation/debris/bird dropping removal and disposal, checking/tightening/replacing of bolts to parapets (to include making good local damage to protective systems).
RCM 2	**6110AR** **6111AR**	**Expansion Joints** - Cleaning out debris/vegetation/sediment from joints and drainage associated with joint, checking/tightening of bolts securing the joint, checking neoprene or elastomeric material for splitting or detachment, checking cover plates and nosing.
RCM 3	**6110AR** **6112AR**	**Drainage Systems** - Removal of obstructions/vegetation which could reduce capacity of the system, cleaning drainage holes, channels, pipes, drainage outlet manholes, weep pipes. Checking operation of flap valves and greasing if required.
RCM 4	**6110AR** **6113AR**	**Parapets and Pedestrian Protection** - Checking/tightening/replacing of bolts. Cleaning hollow section drain holes. Removal of debris/vegetation/bird droppings. Checking freedom of parapet expansion joint.
RCM 5	**6110AR** **6114AR**	**Bearings and Bearing Shelve**s - Removal of debris/vegetation/bird droppings. Checking freedom of movement of bearings. Cleaning where appropriate greasing of accessible mating surfaces.
RCM 6	**6110AR** **6111AR** **6112AR** **6113AR** **6114AR** **6115AR** **6117AR**	**Structures Over or Conveying Watercourses** - As above and including - Removal of debris encrustations/greasing/lubrication of all fittings (in accordance with maintenance manual). Removal and disposal of debris and silt to ensure free flow of water.
RCM 7	**6110AR** **6116AR** **6117AR**	**Sign Gantries and High Mast Lighting** - Holding down assemblies and fixings including cladding to be checked/ tightened/ cleaned/ greased (to include making good local damage to protective systems and replacement of bolts where required). Checking box type structures are water-tight and report leaks & bird entry issues.
RCM 8	**6110AR** **6117AR**	**Non-structural Items** - Movable parts to be cleaned and greased. Holding down assemblies and fixings including cladding to be checked/tightened (to include making good local damage to protective systems).
RCM 9	**6110AR** **6112AR** **6113AR** **6114AR** **6115AR** **6117AR** **6118AR**	**Underpasses and Culverts used by Pedestrians** - Cleaning of ramps, light fittings, ceilings and soffits, mirrors and handrails. Removal of vegetation/sediment on or adjacent to structure which could have a detrimental effect on the function of the structure. Vegetation/debris/bird dropping removal and disposal. Drainage system/gulleys/grates/channels cleared to maintain efficient operation.
RCM 10	**6110AR** **6112AR** **6113AR**	**Retaining Walls** - Removal of vegetation on or adjacent to structure which could have a detrimental effect on the function of the structure.

Route	Structure Ref No	Structure Name	MAINTENANCE ACTIVITY CODE										Date Complete	Signature	Checked on Site	Comments
			RCM1	RCM2	RCM3	RCM4	RCM5	RCM6	RCM7	RCM8	RCM9	RCM10				

Route	Total Structures	Structures Remaining	% Structures Complete	Total Maintenance Items	Maintenance Items Complete	Maintenance Items Remaining	% Items Complete	Comments on Items not Completed
TOTAL								

This is Annex 7.6/B to Schedule 7 Part 6 referred to in the foregoing Agreement between Scottish Ministers and Amey LG Limited.

SCOTTISH MINISTERS' REQUIREMENTS

SCHEDULE 7 PART 6

MANAGEMENT AND MAINTENANCE OF STRUCTURES

ANNEX 7.6/B – List of Structures Requiring Principal Inspections

SCOTTISH MINISTERS' REQUIREMENTS

SCHEDULE 7 PART 6

MANAGEMENT AND MAINTENANCE OF STRUCTURES

ANNEX 7.6/B – List of Structures Requiring Principal Inspections

Principal Inspections Due Between 2015 and 2020

Next Principal Inspection Year : 2015		
Structure Reference No.	**Structure Name**	**Next Principal Inspection Year**
A90 3	Standingstanes Underbridge	2015
A90 4	Dalmeny Railway Bridge	2015
A90 6	Echline North	2015
A90 7	Scotstoun Overbridge	2015
A90 0 H318V	318 Scotstoun Flyover	2015
A90 100 H319V	319 FRB at Ferrytoll	2015
A90 100 H321V	321 S J1 Admiralty	2015
A90 100 G2	VMS/A90/1976S GAN 3S	2015
A90 100 G4	VMS/A90/1000S GAN 4	2015
A90 100 G5	VMS/A90/2052N GAN 2N	2015
M90S 0-1 20	Gyratory Railway West (FT09)	2015
M90 1-1 W10	Admiralty (SE)	2015
M90 1-1 W20	Admiralty (NW)	2015
M90 1-1 G11	VMS/J5 A921W E of J1	2015
M90 1-1 G19	VMS/J1 A921W E of J1	2015
M90 2-3 C95	Halbeath Culvert	2015
M90 2-3 G13	VMS/I Masterton	2015
M90 2-3 H323	323 Middlebank	2015
M90 2-2 H322V	322 J2 Masterton	2015
M90 2-3 G42	VMS/H1 Halbeath	2015
M90 2-3 G43	VMS/H Halbeath South	2015
M90 2-3 H324V	324 B916 Overpass	2015
M90 2-3 H325V	325 S of J2A Duloch	2015
M90 2-3 H326V	326 Duloch on ramp	2015
M823S 0-0 10	M90 SB - A823 WB SR	2015
M823 0-0 50	Accommodation O/B	2015
M823 0-0 G10	VMS/J4 A823E	2015
A921 0 G20	VMS/J2 A921	2015
A985 95 G10	VMS/J3 N of M90 J11	2015

Next Principal Inspection Year : 2016		
Structure Reference No.	**Structure Name**	**Next Principal Inspection Year**
M90 1-2 G40	Admiralty S/Gantry	2016
M90 3-3 W10	Halbeath (SE)	2016
M90 3-3 W20	Halbeath (NW)	2016
M9S 1-1 40	Newmains East	2016
M9S 1-1 50	Humbie Rail	2016
A90 0 G11	VMS-Clermiston	2016
A92S 2	Halbeath North	2016
A92S 5	Halbeath South	2016
A904 0 H310V	310 S of FRB Echline	2016
M823S 0-0 W10	S/B slip road	2016

Next Principal Inspection Year : 2017		
Structure Reference No.	**Structure Name**	**Next Principal Inspection Year**
M90 0-0 G10		2017
M90 0-0 G20		2017
M90 0-1 G5		2017
M90 0-1 G30		2017
M90 0-1 G40		2017
M90 0-1 G50		2017
M90 0-1 G70	M90 0-1 G70	2017
M90 1-1 10	Admiralty South	2017
M90 1-1 G15	Fife ITS Gantry 05F 92990	2017
M90 1-1 20	Admiralty North	2017
M90 1-2 30	Brankholm Burn	2017
M90 1-2 G35	Fife ITS Gantry 01F 90200 90810	2017
M90 1-2 G45	Fife ITS Gantry 02F	2017
M90 2-2 G5	Fife ITS Gantry 04F 90800	2017
M90 2-2 G15	Fife ITS Gantry 08F	2017
M90 2-2 G20	Fife ITS Gantry 07 90790	2017
M90 2-2 G25	Fife ITS Gantry 08F	2017
M90 2-3 G10	Fife ITS Gantry 11F 90240 90760	2017
M90 2-3 G20	Fife ITS Gantry 14F 90250 90750	2017
M90 2-3 G50	Fife ITS Gantry 10F 90230 90770	2017
M90 2-3 G65	Fife ITS Gantry 15F	2017
M90 2-3 G75	Fife ITS Gantry 16F 90270 90730	2017
M90 2-3 G95	Fife ITS Gantry 17F 90280 90720	2017
M90S 1-1 C10	New Swine Burn Culvert	2017
M90S 3-3 G50	Fife ITS Gantry 18F 93990	2017
M9S 1-1 10	Kirkliston Spur	2017
M92S 9 G10	Fife ITS Gantry 20F 93980	2017
M823 1-1 G60	Fife ITS Gantry 03F 92980	2017

Next Principal Inspection Year : 2018		
Structure Reference No.	**Structure Name**	**Next Principal Inspection Year**
A90 0 G1	VMS/K2 A90 N Dalmeny	2018

Next Principal Inspection Year : 2019		
Structure Reference No.	**Structure Name**	**Next Principal Inspection Year**
M9S 1-1 41	Newmains Road O/Bridge West	2019
M90 2-2 G10	Fife ITS Gantry 06F (90220)	2019
A90 5	Echline South	2019
A92S 8	Crossgates West U/B	2019
A92S 9	Crossgates East U/B	2019
M90 2-2 20	C67 O/B	2019
M90S 3-3 30	A92 Link U/B	2019
M823S 0-0 40	A823M EB - M90 SB SR	2019

Next Principal Inspection Year : 2020		
Structure Reference No.	**Structure Name**	**Next Principal Inspection Year**
M90 2-2 10	M90 over A823M/Rail	2020
M90 2-3 40	Duloch O/B	2020
M90 2-3 60	Calais Muir O/B	2020
M90 3-3 F5	Halbeath Interchange F/B	2020
A90 10 W10	Ferrytoll (SE Slip Rd)	2020
A90 100 W5	Crib Wall beneath Dunfermline Wynd	2020
A90 20 W10	N of Ferrytoll Centre Reserve Retaining Wall	2020
A90 15	Ferrytoll Railway Tunnel	2020
A90 40	Dunfermline Wynd Bridge	2020
M9S 1-1 11	Kirkliston Spur N/B	2020
M9S 1-1 60	Humbie Underpass	2020
M9S 1-1 70	Milton Farm Road O/B	2020
M9S 1-1 80	Dolphington Burn	2020
M9S 1-1 85	BP Oil Pipeline Duct	2020
M9S 1-1 90	Scotstoun I/C	2020
M9S 1-1 H10V	CCTV Camera	2020
M823S 0-0 20	M90 NB - A823M WB SR	2020
M823S 0-0 30	M90 SB - A823M WB SR	2020

Structures Constructed under the FRC Principal Contract		
Structure Reference No.	**Structure Name**	**Next Principal Inspection Year**
M90 0-1 68	Queensferry Crossing	TBC
M90 0-1 80	Ferrytoll Viaduct (FT01)	TBC
M90 0-1 90	Ferrytoll Gyratory North (FT03)	TBC
M90 0-1 85	Ferrytoll Gyratory South (FT04)	TBC
M90 0-1 W84	A90 Southbound Merge Retaining Wall (FT11)	TBC
M90 0-1 W91	A90 Southbound Diverge Retaining Wall	TBC
M90 0-1 W92	A90 Central Reserve/Barrier (FT16)	TBC
M90S 0-1 W90	Castlandhill Road Retaining Wall (FT19)	TBC

Structures Constructed under the FRC Principal Contract		
Structure Reference No.	**Structure Name**	**Next Principal Inspection Year**
M90 0-1 55	South Queensferry Gyratory North (ESQ02)	TBC
M90 0-1 50	South Queensferry Gyratory South (ESQ03)	TBC
M90 0-1 35	New B800 Bridge (ESQ04)	TBC
M90 0-1 33	BP Oil Pipeline Protection (ESQ06)	TBC
M90 0-1 37	BP Oil Pipeline Protection (ESQ07)	TBC
M90 0-1 46	BP Oil Pipeline Protection (ESQ05)	TBC
A90 100 G32	G32	TBC
A90 3 G303	ITS Gantry 303N (G02)	TBC
A90 7 G330	ITS Gantry 330N (G03)	TBC
M90 0-1 G30	ITS and Sign Gantry 439S	2017
M90 0-1 G34	ITS and Sign Gantry 432S (G30)	TBC
M90 0-1 G38	ITS and Sign Gantry 431S (G29)	TBC
M90 0-1 G40	ITS and Sign Gantry 304N	2017
M90 0-1 G41	ITS and Sign Gantry 305N (G05)	TBC
M90 0-1 G44	ITS and Sign Gantry 430S (G28)	TBC
M90 0-1 G48	ITS and Sign Gantry 307N (G06)	TBC
M90 0-1 G50	ITS and Sign Gantry 429S	2017
M90 0-1 G52	ITS Gantry 309N (G07)	TBC
M90 0-1 G56	ITS Gantry 310N (G08)	TBC
M90 0-1 G57	ITS and Sign Gantry 426S (G26)	TBC
M90 0-1 G59	ITS and Sign Gantry 425S (G25)	TBC
M90 0-1 G62	ITS Gantry 302N (G01)	TBC
M90 0-1 G64	ITS and Sign Gantry 312N (G09)	TBC
M90 0-1 G66	ITS and Sign Gantry 423S (G24)	TBC
M90 0-1 G69	ITS and Sign Gantry 313N (G10)	TBC
M90 0-1 G71	ITS and Sign Gantry 422S (G23)	TBC
M90 0-1 G74	ITS and Sign Gantry 314N (G11)	TBC
M90 0-1 G76	ITS and Sign Gantry 421S (G22)	TBC
M90 0-1 G80	ITS and Sign Gantry 316N (G12)	TBC
M90 0-1 G81	ITS and Sign Gantry 420S (G21)	TBC
M90 0-1 G83	ITS and Sign Gantry 317N (G13)	TBC
M90 0-1 G84	ITS and Sign Gantry 501N (G20)	TBC
M90 0-1 G86	ITS and Sign Gantry 419S (G19)	TBC
M90 0-1 G87	ITS and Sign Gantry 318N (G14)	TBC
M90 0-1 G89	ITS and Sign Gantry 418S (G18)	TBC
M90 0-1 G90	ITS and Sign Gantry 319N (G15)	TBC
M90 0-1 G94	ITS and Sign Gantry 416S (G17)	TBC
M90 0-1 G95	ITS and Sign Gantry 321N (G16)	TBC

Structures to be Adopted by the Scottish Ministers at Commencement of Service Date 1		
Structure Reference No.	**Structure Name**	**Next Principal Inspection Year**
M90 0-1 G33	VMS1	TBC
M90 0-1 G36	VMS2	TBC
A90 6 G66	VMS3	TBC

Structures to be Adopted by the Scottish Ministers at Commencement of Service Date 1		
Structure Reference No.	**Structure Name**	**Next Principal Inspection Year**
A90 7 F	Plaza Footbridge	TBC
A90 8	Subway to Plaza	TBC
A90 9	Forth Road Bridge	TBC
A90 9 W5	North Sub-station Retaining Wall	TBC

Structure Type	Total No	PI 2015	PI 2016	PI 2017	PI 2018	PI 2019	PI 2020	FRC Structures	To be Adopted
Structures with particular Requirements	6	0	0	0	0	0	0	5	1
Bridges	41	6	4	4	0	6	13	7	1
Footbridges	2	0	0	0	0	0	1	0	1
Culverts	2	1	0	1	0	0	0	0	0
Retaining Walls	13	2	3	0	0	0	3	4	1
Gantries	72	10	2	23	1	1	0	32	3
High Mast Lights	10	8	1	0	0	0	1	0	0

1. For supplementary information on Structures with particular requirements, refer to Schedule 7 Part 7.
2. Further information on the Structures listed within this table is held within the structures management function of the Integrated Roads Information System.
3. The numbers of Structures may be altered during the course of this Contract at the Director's discretion.
4. All Structures with particular requirements lie within the Principal Inspection programme, except where specifically excluded by their own maintenance manual as noted in Schedule 7 Part 7.
5. Not all Structures with particular requirements have Principal Inspections in between 2015 and 2020.

This is Annex 7.6/C to Schedule 7 Part 6 referred to in the foregoing Agreement between Scottish Ministers and Amey LG Limited.

SCOTTISH MINISTERS' REQUIREMENTS

SCHEDULE 7 PART 6

MANAGEMENT AND MAINTENANCE OF STRUCTURES

ANNEX 7.6/C – List of Structures Over or Carrying Watercourses which have been subject to a Stage 1 Scour Assessment

SCOTTISH MINISTERS' REQUIREMENTS

SCHEDULE 7 PART 6

MANAGEMENT AND MAINTENANCE OF STRUCTURES

ANNEX 7.6/C – List of Structures Over or Carrying Watercourses which have been subject to a Stage 1 Scour Assessment

Structure Reference Number	Structure Name	Scour Inspection/Monitoring
M90 1-2 30	Brankholm Burn	
M9S 1-1 C20	Kirkliston Spur Cvt	
M9S 1-1 80	Dolphington Burn	
M90S 1-1 C10	New Swine Burn Culvert	
M90 1-2 C90	Dunfermline Sewer	
M90 2-3 C38	North Duloch	
M90 2-3 C46	South Calais Muir	
M90 2-3 C65	North Calais Muir	

This is Annex 7.6/D to Schedule 7 Part 6 referred to in the foregoing Agreement between Scottish Ministers and Amey LG Limited.

SCOTTISH MINISTERS' REQUIREMENTS

SCHEDULE 7 PART 6

MANAGEMENT AND MAINTENANCE OF STRUCTURES

ANNEX 7.6/D – List of Structures Over or Carrying Watercourses which have been subject to a Stage 2 Scour Assessment

SCOTTISH MINISTERS' REQUIREMENTS

SCHEDULE 7 PART 6

MANAGEMENT AND MAINTENANCE OF STRUCTURES

ANNEX 7.6/D – List of Structures Over or Carrying Watercourses which have been subject to a Stage 2 Scour Assessment

Structure Reference Number	Structure Name	Scour Inspection/Monitoring
None		

This is Annex 7.6/E to Schedule 7 Part 6 referred to in the foregoing Agreement between Scottish Ministers and Amey LG Limited.

SCOTTISH MINISTERS' REQUIREMENTS

SCHEDULE 7 PART 6

MANAGEMENT AND MAINTENANCE OF STRUCTURES

ANNEX 7.6/E – List of Structures subject to Assessment and Upgrading of Vehicle Parapets to Transport Scotland Interim Amendment No 25

SCOTTISH MINISTERS' REQUIREMENTS

SCHEDULE 7 PART 6

MANAGEMENT AND MAINTENANCE OF STRUCTURES

ANNEX 7.6/E – List of Structures subject to Assessment and Upgrading of Vehicle Parapets to Transport Scotland Interim Amendment No 25

Structure Reference Number	Structure Name	Comments
M823 0-0 50	Accommodation O/B	
M9S 1-1 10	Kirkliston Spur S/B	
M9S 1-1 40	Newmains East	
M9S 1-1 50	Humbie Rail	Parapet replaced 2008
A90 9	Forth Road Bridge	Edge parapets on the south abutment approach are considered to be insufficient for vehicle restraint.

This is Annex 7.6/F to Schedule 7 Part 6 referred to in the foregoing Agreement between Scottish Ministers and Amey LG Limited.

SCOTTISH MINISTERS' REQUIREMENTS

SCHEDULE 7 PART 6

MANAGEMENT AND MAINTENANCE OF STRUCTURES

ANNEX 7.6/F – List of Structures Subject to Identification of 'Particularly at Risk' Supports to Transport Scotland Interim Amendment No 29

SCOTTISH MINISTERS' REQUIREMENTS

SCHEDULE 7 PART 6

MANAGEMENT AND MAINTENANCE OF STRUCTURES

ANNEX 7.6/F – List of Structures Subject to Identification of 'Particularly at Risk' Supports to Transport Scotland Interim Amendment No 29

Structure Reference Number	Structure Name	Comments
M9S 1-1 10	Kirkliston Spur S/B	
A90 9	Forth Road Bridge (Towers)	A ranking assessment to BD 48 has indicated a vulnerability to the current traffic mix (inclusive of HGVs). Re-assessment may be required for operations after Commencement of Service Date 2 (public service vehicles and taxis).

This is Annex 7.6/G to Schedule 7 Part 6 referred to in the foregoing Agreement between Scottish Ministers and Amey LG Limited.

SCOTTISH MINISTERS' REQUIREMENTS

SCHEDULE 7 PART 6

MANAGEMENT AND MAINTENANCE OF STRUCTURES

ANNEX 7.6/G – Technical Approval Procedures for Assessment of Structures in Scotland

SCOTTISH MINISTERS' REQUIREMENTS

SCHEDULE 7 PART 6

MANAGEMENT AND MAINTENANCE OF STRUCTURES

ANNEX 7.6/G – Technical Approval Procedures for Assessment of Structures in Scotland

Assessor shall agree AIP with the TAA. This shall embrace all relevant documents from the TAS including the UK Design Manual for Roads and Bridges, and may include departures from standards or aspects not covered by standards.
↓ ↓
Assessment and check shall be carried out and the TAA shall be consulted on those aspects of the assessment which do not comply with the AIP. If further amendments to the AIP shall be required, either by the assessor or the Checker, these shall be approved by the TAA and an addendum to the AIP submitted.
↓ ↓
Assessor shall give recommendations on and agree with the TAA any substandard features identified by the assessment which are not to be upgraded. Any interim measures shall also be agreed at this stage.
↓ ↓
Assessment report submitted to the TAA with list of all substandard features identifying those which shall not be upgraded and giving recommendations for any Special Inspection or studies needed prior to the design of strengthening and or improvement Operations.
↓ ↓
Assessor shall submit assessment and check certificates on which shall be recorded all agreed and or approved departures from standards.
↓ ↓
TAA/OD accepts assessment and check certificates endorsing all departures from standards or aspects not covered by standards.
↓ ↓
END OF ASSESSMENT

DEFINITION

Assessment includes:

1. Load carrying capacity of deck and substructure
2. Parapets
3. Pier impact resistance
4. Safety fencing
5. Visibility
6. Vertical and Horizontal Clearances
7. Central reserve, carriageway, footway, and verge provision
8. Scour risk
9. All other aspects relative to the AIP

ABBREVIATIONS

TAA = Technical Approval Authority
TAS = Technical Approval Schedule
AIP = Approval in Principle
OD = Overseeing Department

NOTE:

1. For strengthening and or improvement works, Technical Approval procedures shall be the same as for new Structures.

Figure 1.1.1.A – Flow Chart for Departures from Standard or Aspects not Covered by Standards

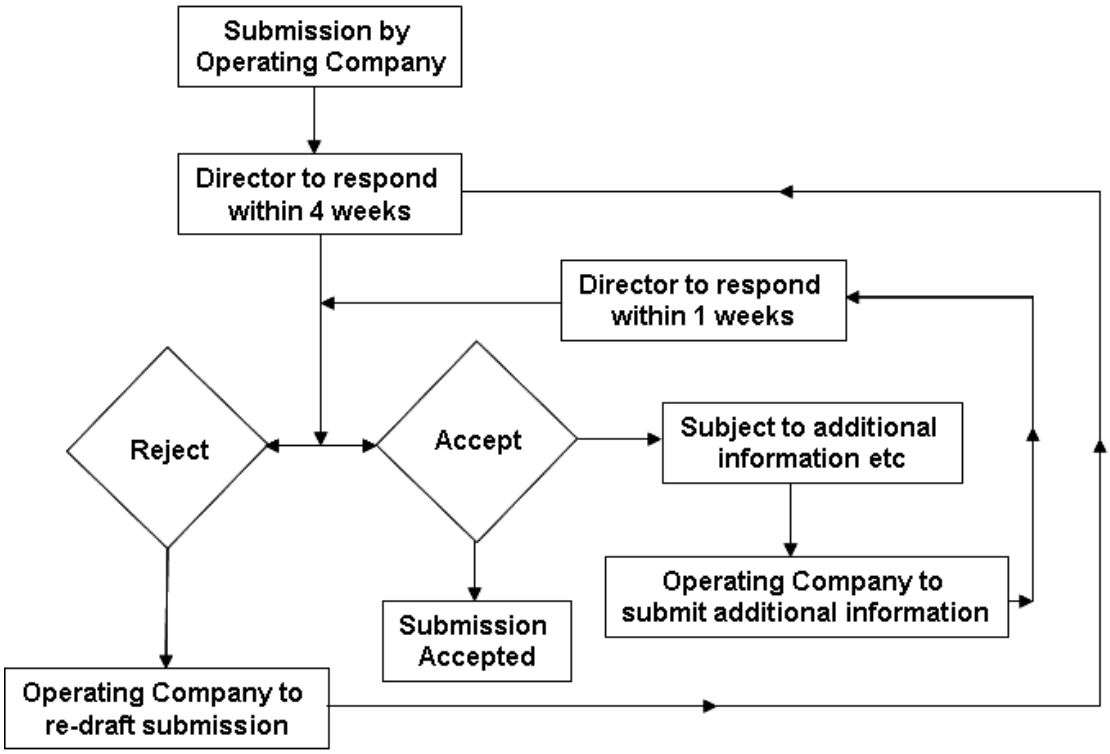

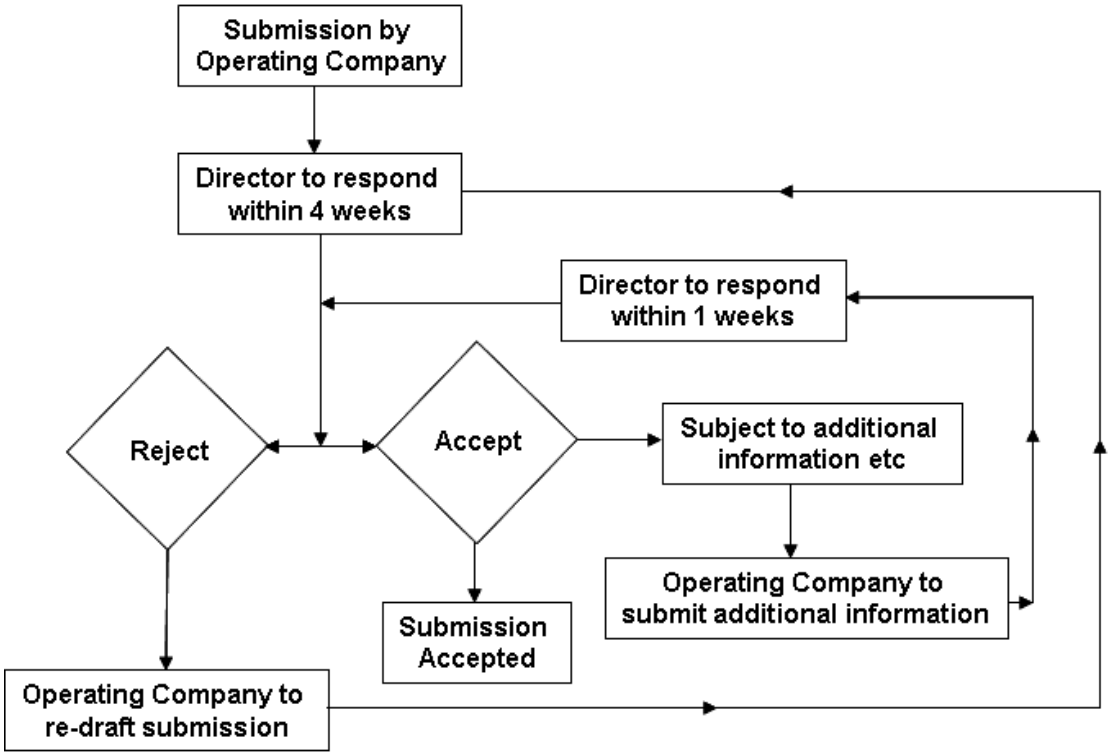

This is Annex 7.6/H to Schedule 7 Part 6 referred to in the foregoing Agreement between Scottish Ministers and Amey LG Limited.

SCOTTISH MINISTERS' REQUIREMENTS

SCHEDULE 7 PART 6

MANAGEMENT AND MAINTENANCE OF STRUCTURES

ANNEX 7.6/H – List of Sub-Standard Structures with Structural Assessments in Progress

SCOTTISH MINISTERS' REQUIREMENTS

SCHEDULE 7 PART 6

MANAGEMENT AND MAINTENANCE OF STRUCTURES

ANNEX 7.6/H – List of Sub-Standard Structures with Structural Assessments in Progress

Forth Bridges Unit

Structure Reference Number	Structure Name	Comments
M90 1-1 10	Admiralty South	Safety Barrier present in front of the existing parapet / cope
M90 1-1 20	Admiralty North	Safety Barrier present in front of the existing parapet / cope
M823S 0-0 30	M90 SB - A823M WB SR	Safety Barrier present in front of the existing parapet / cope
A90 9	Forth Road Bridge	Main cable capacity
A90 9	Forth Road Bridge	Truss chords; (multiple) components
A90 9	Forth Road Bridge	Truss end Links
A90 9	Forth Road Bridge	Kingposts (in truss)
		Refer to Criticality and Vulnerability assessments referred to in Annex 7.7/B.

This is Annex 7.6/I to Schedule 7 Part 6 referred to in the foregoing Agreement between Scottish Ministers and Amey LG Limited.

SCOTTISH MINISTERS' REQUIREMENTS

SCHEDULE 7 PART 6

MANAGEMENT AND MAINTENANCE OF STRUCTURES

ANNEX 7.6/I – List of Sub-Standard Structures

SCOTTISH MINISTERS' REQUIREMENTS

SCHEDULE 7 PART 6

MANAGEMENT AND MAINTENANCE OF STRUCTURES

ANNEX 7.6/I – List of Sub-Standard Structures

Structure Reference Number	Structure Name	Comments
M90 1-1 10	Admiralty South	Weak verges which are delineated from the carriageway and subject to 2 yearly BD79 inspection.
M90 1-1 20	Admiralty North	Weak verges which are delineated from the carriageway and subject to 2 yearly BD79 inspection.
M823S 0-0 30	M90 SB - A823M WB SR	Weak verges which are delineated from the carriageway and subject to 2 yearly BD79 inspection.
M90 2-3 40	Duloch O/B	Duct slab covers and parapet require strengthening.
A90 9	Forth Road Bridge	Refer to *Forth Road Bridge Engineering Manual*

This is Annex 7.6/J to Schedule 7 Part 6 referred to in the foregoing Agreement between Scottish Ministers and Amey LG Limited.

SCOTTISH MINISTERS' REQUIREMENTS

SCHEDULE 7 PART 6

MANAGEMENT AND MAINTENANCE OF STRUCTURES

ANNEX 7.6/J – List of Structures with Known Defects Requiring Monitoring which are Sub-Standard

SCOTTISH MINISTERS' REQUIREMENTS

SCHEDULE 7 PART 6

MANAGEMENT AND MAINTENANCE OF STRUCTURES

ANNEX 7.6/J – List of Structures with Known Defects Requiring Monitoring which are Sub-Standard

Forth Bridges Unit

Structure Reference	Structure Name	Monitoring				Comment
		Interim Measures	Class	Interval	Details	
M90 1-1 10	Admiralty South	Barrier	None	None	Weak edge beam	Monitor at GI & PI
M90 1-1 20	Admiralty North	Barrier	None	None	Weak edge beam	Monitor at GI & PI
M823S 0-0 30	M90 SB – A823M WB SR	Barrier	None	None	Weak edge beam	Monitor at GI & PI
A90 9	Forth Road Bridge	Monitoring	Varies	Varies	Various elements – refer to Risk Priority Number (RPN) calculation and Inspection Frequencies in current Criticality and Vulnerability Ratings referred to in Annex 7.7/B.	Refer to Forth Road Bridge Engineering Manual
A90 9	Forth Road Bridge	Main Cable Internal Inspections	Non-standard	5 yearly	FRB Main Cable	Refer to Forth Road Bridge Engineering Manual

This is Annex 7.6/K to Schedule 7 Part 6 referred to in the foregoing Agreement between Scottish Ministers and Amey LG Limited.

SCOTTISH MINISTERS' REQUIREMENTS

SCHEDULE 7 PART 6

MANAGEMENT AND MAINTENANCE OF STRUCTURES

ANNEX 7.6/K – List of Structures with Known Defects Requiring Monitoring that are not Sub-Standard

SCOTTISH MINISTERS' REQUIREMENTS

SCHEDULE 7 PART 6

MANAGEMENT AND MAINTENANCE OF STRUCTURES

ANNEX 7.6/K – List of Structures with Known Defects Requiring Monitoring that are not Sub-Standard

Forth Bridges Unit

Structure Reference	Structure Name	Monitoring				Comment
		Interim Measures	Class	Interval	Details	
None						

This is Annex 7.6/L to Schedule 7 Part 6 referred to in the foregoing Agreement between Scottish Ministers and Amey LG Limited.

SCOTTISH MINISTERS' REQUIREMENTS

SCHEDULE 7 PART 6

MANAGEMENT AND MAINTENANCE OF STRUCTURES

ANNEX 7.6/L – Strengthening and Replacement Programme for the Sub-Standard Structures

SCOTTISH MINISTERS' REQUIREMENTS

SCHEDULE 7 PART 6

MANAGEMENT AND MAINTENANCE OF STRUCTURES

ANNEX 7.6/L – Strengthening and Replacement Programme for Sub-Standard Structures

Structure Reference Number	Structure Name	Comments
		Planned Works:
A90 9	Forth Road Bridge	Viaduct outrigger (cantilever) beam strengthening
A90 9	Forth Road Bridge	Suspended span truss strengthening
A90 9	Forth Road Bridge	Main Expansion Joint Replacement
		Enabling Works Possibly Relevant to Above:
A90 9	Forth Road Bridge	Main Cable Acoustic Monitoring
A90 9	Forth Road Bridge	Suspended Spans inter-walkway underdeck access improvements
A90 9	Forth Road Bridge	Provision of third sidespan gantry
A90 9	Forth Road Bridge	Viaducts S3 Platform and access

This is Annex 7.6/M to Schedule 7 Part 6 referred to in the foregoing Agreement between Scottish Ministers and Amey LG Limited.

SCOTTISH MINISTERS' REQUIREMENTS

SCHEDULE 7 PART 6

MANAGEMENT AND MAINTENANCE OF STRUCTURES

ANNEX 7.6/M – Structures with Bridge Access Gantries and or Runway Beams

SCOTTISH MINISTERS' REQUIREMENTS

SCHEDULE 7 PART 6

MANAGEMENT AND MAINTENANCE OF STRUCTURES

ANNEX 7.6/M – Structures with Bridge Access Gantries and or Runway Beams

Table 7.6.M.1 – Forth Bridges Unit

Structure Reference Number	Structure Name	Access Gantry	Runway Beams	Comments
A90 9	Forth Road Bridge	Yes	Yes	Different systems use runway beams on the Approach Viaducts and Suspended Structure
M90 0-1 68	Queensferry Crossing	Yes	Yes	Underdeck gantries and deck shuttles both have runway beams

Table 7.6.M.2 – Structures in the Forth Bridges Unit Which Require Their Access Gantries and or Runway Beams to Remain Certified at All Times During the Contract

Structure Reference Number	Structure Name	Access Gantry	Runway Beams	Comments
A90 9	Forth Road Bridge	Yes	Yes	
M90 0-1 68	Queensferry Crossing	Yes	Yes	
				Note this certification requirement refers to all Access Systems on the Principal Crossings unless otherwise agreed in writing with the Director.

All gantries and or runway beams should be certified if they are to be used and have not previously been used for 12 months.

This is Annex 7.6/N to Schedule 7 Part 6 referred to in the foregoing Agreement between Scottish Ministers and Amey LG Limited.

SCOTTISH MINISTERS' REQUIREMENTS

SCHEDULE 7 PART 6

MANAGEMENT AND MAINTENANCE OF STRUCTURES

ANNEX 7.6/N – List of Agreements with Third Parties that Affect Existing and Future Management, Maintenance and Replacement of Structures

SCOTTISH MINISTERS' REQUIREMENTS

SCHEDULE 7 PART 6

MANAGEMENT AND MAINTENANCE OF STRUCTURES

ANNEX 7.6/N – List of Agreements with Third Parties that Affect Existing and Future Management, Maintenance and Replacement of Structures

Structure Reference Number	Structure Name	Structure Stakeholders		Comments
		Name	Contact	
A90 4	Dalmeny Railway Bridge	Network Rail		No formal agreement exists.
A90 9	Forth Road Bridge	British Telecom		No formal agreement exists.
A90 9	Forth Road Bridge	Mercury Communications aka Cable & Wireless		Services access agreement.
A90 9	Forth Road Bridge	Coastguard – radio equipment at South Tower		No formal agreement exists.
M9S 1-1 85	BP Oil Pipeline Duct	British Petroleum		No formal agreement exists.
M90 0-1 33	BP Oil Pipeline Protection (ESQ06)	British Petroleum		Annual checks on for stray currents. No formal agreement exists.
M90 0-1 37	BP Oil Pipeline Protection (ESQ07)	British Petroleum		Annual checks on for stray currents. No formal agreement exists.
M90 0-1 46	BP Oil Pipeline Protection (ESQ05)	British Petroleum		Annual checks on for stray currents. No formal agreement exists.

M90 0-1 35	New B800 Bridge	British Petroleum		Annual checks on for stray currents. No formal agreement exists.
M90 2-2	M90 over A823M/Rail	Network Rail		No formal agreement exists.

This is Annex 7.6/O to Schedule 7 Part 6 referred to in the foregoing Agreement between Scottish Ministers and Amey LG Limited.

SCOTTISH MINISTERS' REQUIREMENTS

SCHEDULE 7 PART 6

MANAGEMENT AND MAINTENANCE OF STRUCTURES

ANNEX 7.6/O – List of Bridges with Signed Low Headroom

SCOTTISH MINISTERS' REQUIREMENTS

SCHEDULE 7 PART 6

MANAGEMENT AND MAINTENANCE OF STRUCTURES

ANNEX 7.6/O – List of Bridges with Signed Low Headroom

Structure Reference Number	Structure Name	Comments
None		

This is Annex 7.6/P to Schedule 7 Part 6 referred to in the foregoing Agreement between Scottish Ministers and Amey LG Limited.

SCOTTISH MINISTERS' REQUIREMENTS

SCHEDULE 7 PART 6

MANAGEMENT AND MAINTENANCE OF STRUCTURES

ANNEX 7.6/P – List of Structures subject to Frequent Bridges Strikes with dates of Incidents Since 2001

SCOTTISH MINISTERS' REQUIREMENTS

SCHEDULE 7 PART 6

MANAGEMENT AND MAINTENANCE OF STRUCTURES

ANNEX 7.6/P – List of Structures subject to Frequent Bridges Strikes with dates of Incidents Since 2001

Structure Reference Number	Structure Name	Date of Strike Incident							Comments
		1st	2nd	3rd	4th	5th	6th	7th	
None									

SCOTTISH MINISTERS' REQUIREMENTS

SCHEDULE 7 PART 7

STRUCTURES WITH PARTICULAR REQUIREMENTS

CONTENTS **Page No.**

1.	**INTRODUCTION**	**1**
1.1	General	1
ANNEX 7.7/A – Structures with Particular Requirements		**3**
ANNEX 7.7/B – Documents for Structures with Particular Requirements		**38**
ANNEX 7.7/C – Forth Road Bridge– List of Access Systems Exempt from Full-Time Certification.		**42**

SCOTTISH MINISTERS' REQUIREMENTS

SCHEDULE 7 PART 7

STRUCTURES WITH PARTICULAR REQUIREMENTS

1. INTRODUCTION

1.1 General

1.1.1 In addition to the requirements of Schedule 7 Part 6, the Operating Company shall inspect, monitor, test, manage and maintain the Structures with particular requirements listed in Annex 7.7/A of this Part, in accordance with the manuals and associated schedules listed in Annex 7.7/B of this Part.

1.1.2 No later than 180 days after Commencement of Service Date 1, the Operating Company shall supply the Director with an Electronic Copy of all documents including manuals which have been transferred to it by FETA, the previous operating company or by the Director in relation to Network 1. No later than 50 Working Days after Commencement of Service Date 2, the Operating Company shall supply the Director with an Electronic Copy of all documents including manuals which have been transferred to it by the Director in relation to Network 2. The Operating Company shall advise the Director of any documents or parts thereof listed in Annex 7.7/B of this Part that were not transferred and of any further documents which it requires. The Director will forward to the Operating Company any such further documents which he holds. The Operating Company shall check the documents relating to Network 2 for any discrepancies or deficiencies. The Operating Company shall advise the Director of any deficiencies and discrepancies and shall submit proposals confirming how any discrepancies could be resolved.

1.1.3 In each Annual Period, the Operating Company shall review the documents listed in Annex 7.7/B of this Part for each of the Structures listed in Annex 7.7/A of this Part. Following the annual review of the documents and subject to the written consent of the Director, the Operating Company shall update the documents to meet the requirements of current Legislation and include amendments required to reflect work carried out.

1.1.4 Immediately following receipt of the Director’s written consent, an Electronic Copy of each updated document shall be issued to the Director by the Operating Company.

1.1.5 The Operating Company shall issue an inspection report for each Structure in a General Inspection format to the Director by 31 January in the calendar year following the inspections of each Structure. The annual inspection report shall cover the matters identified in the documents referred to in Annex 7.7/B of this Part including any mechanical and electrical installations. Copies of periodic inspection and test Certificates shall be provided with the reports where applicable. Separate reports shall be provided for all Access Systems that remain certified for use.

1.1.6 The Operating Company shall provide Principal Inspection reports at intervals indicated in paragraphs 2.2.8 and 3.2.8 of this Part or Annex 7.7/A of this Part, that include detailed summaries of the inspection reports. Principal Inspection reports shall include priority ranking of Defects that have been identified. Principal Inspection reports shall be provided by 30 November in the year in which the Principal Inspection cycle becomes due.

1.1.7 The Operating Company shall enter all inspection reports and related data directly into the structures management function of the Integrated Roads Information System in a format consented to by the Director in writing within 10 Working Days of their production.

1.1.8 For the Structures listed in Annex 7.7/A of this Part, the Operating Company shall upload a summary Defect report into the structures management function of the Integrated Roads Information System in a format consented to by the Director in writing within 10 Working Days of its production.

1.1.9 Subject to an Order, Special Inspections shall be undertaken by the Operating Company.

1.1.10 The Operating Company shall carry out Programmed Special Inspections, as required by the *Forth Road Bridge Engineering Manual* and the *Register of Programmed Special Inspections for the Forth Road Bridge*.

This is Annex 7.7/A to Schedule 7 Part 7 referred to in the foregoing Agreement between Scottish Ministers and Amey LG Limited.

SCOTTISH MINISTERS' REQUIREMENTS

SCHEDULE 7 PART 7

STRUCTURES WITH PARTICULAR REQUIREMENTS

ANNEX 7.7/A – Structures with Particular Requirements

SCHEDULE 7 PART 7

STRUCTURES WITH PARTICULAR REQUIREMENTS

ANNEX 7.7/A – Structures with Particular Requirements

1. Structures with Particular Requirements

1.1.1 The Structures listed within the tables below have particular requirements which the Operating Company shall carry out in addition to those duties set down in Schedule 7 Part 6. These requirements shall be read in conjunction with the documents listed in Annex 7.7/B of this Part.

Table 1.1.1.A – Structures on the Trunk Road

Structure Reference Number	Structure Name
A90 9	Forth Road Bridge
M90 0-1 68	Queensferry Crossing
M90 0-1 33	BP Oil Pipeline Protection Structure (ESQ06)
M90 0-1 37	BP Oil Pipeline Protection Structure (ESQ07)
M90 0-1 46	BP Oil Pipeline Protection Structure (ESQ05)
M90 0-1 35	New B800 Bridge (ESQ04)

Table 1.1.1.B – Structures which are the property of Scottish Canals

None.

Table 1.1.1.C – Structures not on the Trunk Road

None.

2. A90 9 Forth Road Bridge

2.1.1 Completed in 1964, this suspension bridge shown in Figure 2.1.1.A and whose location is denoted within Figure 2.1.1.B has a length of 2513 metres including the approach viaducts and carries four lanes of the A90 over the Firth of Forth. There is a separate footway and cycle track on either side.

The bridge, now a Category A listed Structure, has a central span of 1006m between its two main towers. The side spans, which carry the deck to the side towers, are each 408m long, and are flanked by approach viaducts.

The steel orthotropic deck is supported on steel stringer beams that span between large steel cross girders spaced at 9,144mm centres. These cross girders are supported by two longitudinal stiffening trusses which, in turn, hang from the 610mm diameter main cables. Linking the stiffening trusses to the main cables are 192 sets

of wire rope hangers at 18.29 metre centres varying in length from 2.5m at mid span to 90m adjacent to the main towers.

The main towers extend 156m above mean high water level and the sag of the cables between the towers is approximately 91m; that is, the sag is 1 /11th of the span. The clearance to navigation at mid span is approximately 44 metres above mean high water springs without underdeck gantries.

At the side towers the supporting cables turn downwards towards the anchorages which are, essentially, wedges constructed by tunnelling into the rock.

Figure 2.1.1.A – Forth Road Bridge *(courtesy of FETA)*

Figure 2.1.1.B – Forth Road Bridge Location

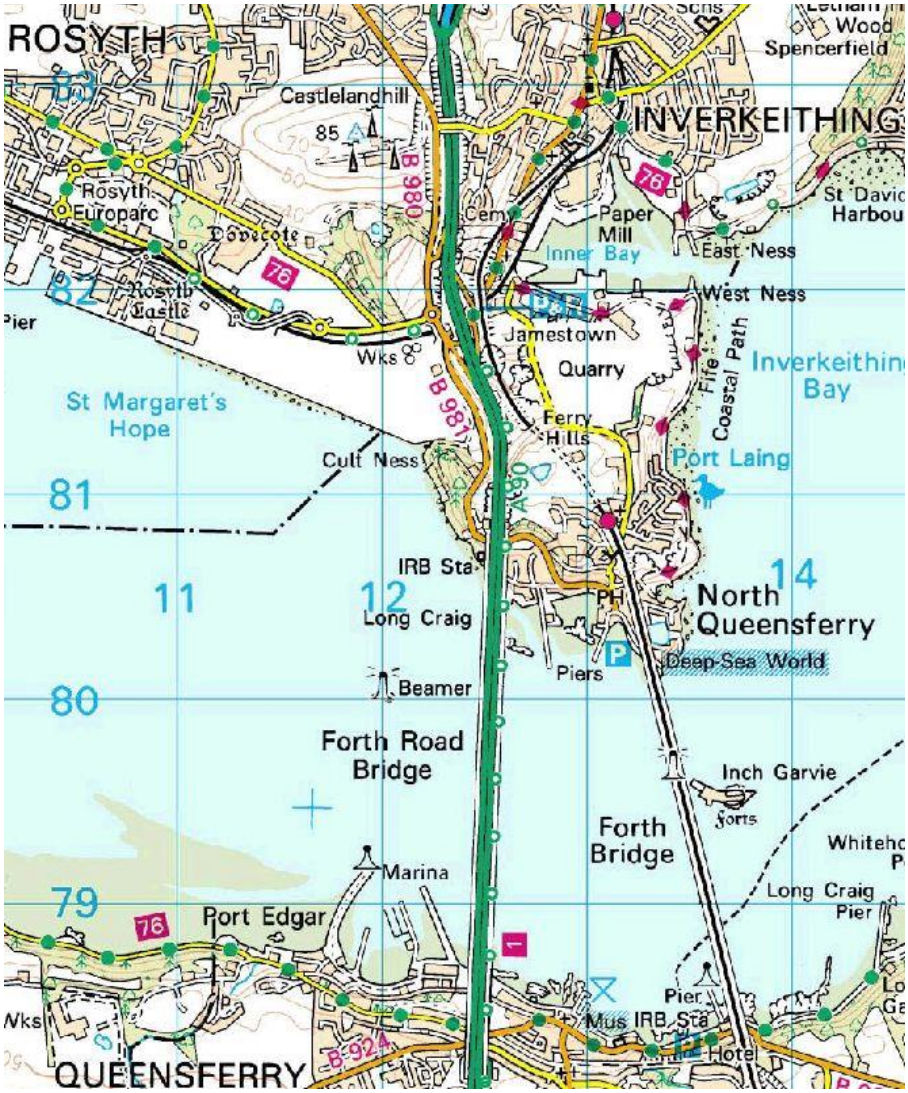

signed for and on behalf of The Scottish Ministers

by ……...Roy Brannen……

on …..…… December 2014……

at ……Glasgow……...……

……..……
Authorised Signatory

signed for and on behalf of AMEY LG Limited

by
……...……

on ……..… December 2014……

at ……Glasgow……..…

……..…
Director/Company Secretary/
Authorised Signatory*

2.2 Particular Requirements for The Forth Road Bridge

2.2.1 The Forth Road Bridge Engineering Manual

The *Forth Road Bridge Engineering Manual* contains the requirements for the inspection and maintenance of the Forth Road Bridge. Written originally as a standalone document, any directions within it that appear to conflict with the requirements of the Contract shall be raised with the Director in writing for determination within two weeks of discovery. The *Forth Road Bridge Engineering Manual* also provides design and historical maintenance information on the Forth Road Bridge. The Operating Company shall review and update this information until the Service End Date in accordance with the procedure described in Schedule 7 Part 6.

2.2.2 Forth Road Bridge Maintenance Procedures

During Mobilisation Period 1, the Operating Company shall develop procedures in the Management System for the inspection, operation and maintenance of the Forth Road Bridge. Historical procedures associated with Forth Road Bridge inspection, operation and maintenance shall be reviewed and assessed in the course of producing the new procedures. The Operating Company shall submit these to the Director for written consent no later than 60 Days prior to Commencement of Service Date 1.

The Operating Company shall undertake the inspection, operation and maintenance of the Forth Road Bridge in accordance with the procedures consented to in writing by the Director.

The *Forth Road Bridge Engineering Manual* includes operational and health and safety statements, sometimes expressed as requirements. In developing its own procedures, the Operating Company shall assess the suitability of each statement in light of its own responsibilities under health and safety Legislation. The manual shall be reviewed and updated by the Operating Company as described in Schedule 7 Part 6.

2.2.3 In addition to the requirements of Schedule 7 Part 6, the Operating Company shall undertake the inspection, survey and maintenance of the structural elements of the Forth Road Bridge from Commencement of Service Date 1 until the Service End Date including as a minimum:

(i) Main Cable, clamps and handstrand equipment,

(ii) Towers,

(iii) Suspended truss,

(iv) Main span orthotropic deck panels,

(v) Side span composite concrete deck,

(vi) Truss-to-tower pendel link bearings,

(vii) Cable anchorages,

(viii) Hangers and assemblies,

(ix) Deck half joints on the truss,

(x) Deck end trimmers,

(xi) Tower Expansion joints (Demag),

(xii) Approach viaduct box girders and concrete decks,

(xiii) Viaduct piers, bearings and movement joints,

(xiv) North Viaduct comb-type expansion joint,

(xv) South Viaduct comb-type expansion joint,

(xvi) Barriers/ parapets,

(xvii) Ship impact cofferdams protecting main piers,

(xviii) Access Systems (gantries), and

(xix) Access walkways.

2.2.4 The Operating Company shall undertake the inspection, survey and maintenance of the non-structural elements on the Forth Road Bridge from Commencement of Service Date 1 until the Service End Date including as a minimum:

(i) Deck drainage steelwork,

(ii) Steel balustrades and fences,

(iii) De-humidification system inside towers,

(iv) De-humidification system inside anchorages,

(v) Main cable de-humidification system including neoprene wrapping,

(vi) Main cable acoustic monitoring equipment,

(vii) Lifts inside towers,

(viii) CCTV cameras,

(ix) Security systems,

(x) Aviation/ navigation warning lights, and

(xi) All other mechanical and electrical systems.

2.2.5 **Structural Assessment**

The Forth Road Bridge is subject to a 2-yearly Bridge Specific Assessment Live Load pursuant to *BD50/92*. The Operating Company shall submit a schedule for the proposed continued execution of these assessments to the Director for written consent a minimum of 30 days prior to Commencement of Service Date 1. Subject to an Order, the Operating Company shall undertake a Bridge Specific Assessment Live Load determination. Where a Bridge Specific Assessment Live Load is needed, contemporary data from the calibrated weigh-in-motion system shall be required.

2.2.6 **Inspection Frequencies**

The detailed inspection regime contained within the *Forth Road Bridge Engineering Manual* requires inspections of specific elements to be undertaken at different frequencies from the intervals stated in Schedule 7 Part 6. Where described in the *Forth Road Bridge Engineering Manual*, the minimum frequency of inspections shall be determined using a criticality and vulnerability assessment in accordance with the *Forth Road Bridge Engineering Manual* and paragraph 2.2.8 of this Part. In addition the minimum frequency of Programmed Special Inspections is as described in the

Register of Programmed Special Inspections for the Forth Road Bridge. The Operating Company shall continuously review these assessments and the elements forming part of the Programmed Special Inspections as a part of its inspection planning activity and any changes to the planned inspection programmes and frequencies shall be submitted to the Director for his written consent as a part of the annual inspection reporting process.

2.2.7 Elements not specifically identified in the Forth Road Bridge Engineering Manual or criticality and vulnerability assessment shall be subject to inspection requirements in accordance with the requirements of *Transport Scotland Interim Amendment No 33*, BD63 and the *Transport Scotland Inspection Manual – Principal Inspection of Trunk Road Structures and Location System*.

2.2.8 **Inspections on Forth Road Bridge**

(i) The maximum intervals for element inspections are determined by a criticality and vulnerability ratings procedure using the method described in the *Forth Road Bridge Engineering Manual*,

(ii) Owing to the difficulty of access to many areas of the Forth Road Bridge and large viewing distances involved, inspections that would ordinarily be categorised as General Inspections in *BD63* and so requiring only Visual Inspection shall be executed to a Close Visual Inspection standard in accordance with the requirements for Principal Inspections to save repeated visits,

(iii) At least one full Principal Inspection of all elements shall be completed within four years and nine months of Commencement of Service Date 1. Where the period from Commencement of Service Date 1 to Service End Date extends beyond six years, the subsequent Principal Inspections shall be undertaken in accordance with the inspection programme as defined in Schedule 7 Part 6 and within the maximum time periods between scheduled inspections. The schedule of Principal Inspections shall be subject to the written consent of the Director,

(iv) During Mobilisation Period 1, the Operating Company shall review FETA's inspection schedules and prioritise the elements selected for inspection to ensure that maximum required inspection intervals are not exceeded,

(v) For the Forth Road Bridge, Principal Inspection reports shall be submitted in each Annual Period a minimum of 30 days prior to the review of the structures maintenance schedule as defined in Schedule 7 Part 6 for the sets of structural parts inspected in the preceding period. The first such submission shall take place no earlier than five months after and no later than 11 months after Commencement of Service Date 1,

(vi) Historic times and intervals of the inspection of structural elements have been recorded in the Forth Road Bridge Maintenance Database, and

(vii) The Operating Company shall carry out Programmed Special Inspections as required by the *Forth Road Bridge Engineering Manual* and the *Register of Programmed Special Inspections for the Forth Road Bridge*.

2.2.9 **Positional Surveys**

The Operating Company shall produce a Principal Inspection survey procedure for the Forth Road Bridge and submit it to the Director for written consent no later than Commencement of Service Date 1. Surveys shall be scheduled with Principal Inspections using conventional optical survey methods. These may be combined with relevant, verified and datum-referenced records provided checks are made by the Operating Company. The surveys shall measure and record:

(i) Horizontal alignment and levels of the viaduct spans at pier and midspan locations,

(ii) Pier and tower foundation and abutment levels and transverse tilts,

(iii) Navigational clearances at the bridge midspan and corners of the navigational envelope,

(iv) Longitudinal and transverse verticality of the towers,

(v) Longitudinal verticality of the piers,

(vi) Gaps at the tower, side tower and viaduct expansion joints, and

(vii) Mean effective temperatures of each deck girder or deck box for the survey period.

Verticality values shall be absolute and gravity-referenced.

2.2.10 The Operating Company shall ensure that all structural baseline measurements and positions are established for long-term monitoring and be repeatably referable to permanent datum benchmarks for horizontal position and level by taking at least two independent sets of measurements to an accuracy of 2mm.

The first positional survey shall be completed to establish the reference data set no later than 12 months after Commencement of Service Date 1 and repeated thereafter to coincide with the completion of each Principal Inspection cycle.

2.2.11 **The Forth Road Bridge Main Cable**

Prior to Operations Commencement Date 1, the main cable has been subject to a series of intrusive inspections carried out by independent specialists in order to assess its internal condition in accordance with the United States guidance document *National Cooperative Highway Research Program Report 543*. The Operating Company shall review the findings of such previous inspections including as a minimum the recommended time periods for further inspections.

The Operating Company shall review the monthly reports produced for the acoustic monitoring system. No more than 180 days after Commencement of Service Date 1 the Operating Company shall propose dates for further intrusive inspections to the Director for his written consent. Subject to an Order, the Operating Company shall facilitate the execution of further main cable inspections.

The Operating Company shall continuously monitor the results from the Forth Road Bridge main cable acoustic monitoring system from Commencement of Service Date 1 until the Service End Date. The Operating Company shall review the monthly reports produced by the contractor responsible for the acoustic monitoring system from Commencement of Service Date 1 until the end of the contractor's monitoring and reporting service period. Thereafter the Operating Company shall produce

monthly reports in the same format and within the same timescales as those produced by the contractor responsible for the acoustic monitoring system. The Operating Company shall produce an interpretative report in a format to be agreed with the Director every six months from Commencement of Service Date 1 summarising the findings of the monitoring and reporting and shall submit the report to the Director. Any anomaly that might give cause for concern regarding the apparent behaviour of the main cable or the acoustic monitoring system shall be reported to the Director in writing within 30 days of the emergence of said anomaly.

Prior to the end of the contractor's monitoring and reporting service period for the acoustic monitoring system the Operating Company shall obtain all archived and backup data stored by the contractor and thereafter shall store this data together with all additional data generated by the system on suitable durable storage media until Service End Date. At Service End Date, all data and all rights therein shall be assigned by the Operating Company unconditionally to the Director.

The Operating Company shall be responsible for the on-site maintenance of the acoustic monitoring system in accordance with the requirements of the performance specification from Commencement of Service Date 1 until the Service End Date.

2.2.12 **Mechanical, Electrical & Plumbing Installations (Forth Road Bridge)**

The Operating Company shall be responsible for the inspection, operation, maintenance and certification of all mechanical, electrical and plumbing installations in accordance with the requirements of the Forth Road Bridge Engineering Manual from Commencement of Service Date 1 until the Service End Date. If inspection and maintenance requirements are not adequately covered in the Forth Road Bridge Engineering Manual, manufacturer's recommendations and Legislation shall be adhered to.

The sub-systems forming part of the mechanical, electrical and plumbing systems shall include as a minimum:

(i) Power systems and electrical installations including navigation, aircraft obstruction and display lights and internal lighting to the towers and viaducts,

(ii) Access Systems,

(iii) Anemometers and weather stations,

(iv) CCTV cameras, variable message signs and traffic signalling equipment,

(v) Dehumidification systems for the main cables, tower top and saddles,

(vi) Dehumidification systems for the anchorages,

(vii) Weigh in motion system – maintenance and calibration,

(viii) Roadway Icelerts,

(ix) Roadside emergency (crisis) telephone system,

(x) Plumbing systems, and

(xi) Any other systems set out in the *Forth Road Bridge Engineering Manual*.

Details of the above systems are set out in the *Forth Road Bridge Engineering Manual*. During Mobilisation Period 1, the Operating Company shall develop procedures and schedules for the operation, maintenance and inspection of all

mechanical, electrical and plumbing equipment and shall submit these to the Director for written consent a minimum of 30 Days prior to Commencement of Service Date 1. The procedures shall include details of any proposed specialists and subcontractors required.

Inspection and maintenance intervals and summary duties shall be carried out as stated in the *Forth Road Bridge Engineering Manual* and shall follow manufacturer's recommendations and Legislation.

2.2.13 **Access Systems (Forth Road Bridge)**

In addition to the requirements of Schedule 7 Part 6, the Operating Company shall be responsible for the inspection, operation, maintenance, storage and servicing (including mechanical and electrical installations) of all Access Systems on the Forth Road Bridge from Commencement of Service Date 1 until the Service End Date and with the exception of the systems listed in Annex 7.7/C of this Part, these Access Systems shall remain certified for use at all times regardless of whether they are used or not. Access Systems not required to be kept certified shall be kept in secure, sheltered, and enclosed storage facilities. Subject to an Order the Operating Company shall dispose of any Access Systems which will not be required, the value being credited to Scottish Ministers.

During Mobilisation Period 1, the Operating Company shall develop procedures for the inspection, operation and maintenance of all Access Systems and shall submit these to the Director for his consent a minimum of 30 Days prior to Commencement of Service Date 1. Inspection, operation and maintenance requirements shall comply with the recommendations set out in the *Forth Road Bridge Engineering Manual.*

The Operating Company shall provide secure sheltered and enclosed storage facilities within the Unit for all Access System equipment not in use on the Forth Road Bridge.

The following types of Access System equipment together with any further Access Systems commissioned prior to the Service End Date shall be maintained and kept in working order at all times:

(i) Underdeck access gantries – Suspension Bridge,

There are two underdeck gantries serving the main bridge suspended structure, one for the sidespans and one for the main span.

(ii) Underdeck access gantries – Approach Viaducts,

There are two underdeck access gantries, one for each Approach Viaduct; each comprises three sections – two 'wing' gantries that are suspended below the outer cantilevers and a central suspended section that hangs from each and bridges between them.

(iii) Tower platforms and cradles,

There are two access systems from the towers, one is a full wrap-around 'Beeche' system that was developed for complete overpainting of the towers; this was operated in conjunction with a dropped object canopy. The second system is an 'Alta' self-winched system comprised of several modular components configurable to suit different inspection and light maintenance activities with only one or two separate cradles usable at a time.

All are suspended from lifting beams at the tower top portal level.

(iv) Main Cable Gantries,

There are three types – two for Forth Road Bridge main cable intrusive inspection, two for cable band bolt replacement and one for hanger replacement. Gantries shall be maintained such that access and functionality for all of these activities shall be retained at all times.

(v) Hanger access cradles,

There are two man-riding type self-winching 'Tirak' cradles used for hanger painting and inspection.

(vi) Suspended span underdeck access system – Suspension Bridge,

This system has to be maintained and tested and components certified as fit for use.

(vii) Tower Lifts,

(viii) There are a total of two internal tower lifts, operating in the south east and north west legs.

2.2.14 **Access Walkways, Ladders, Stairs and Platforms**

All access walkways, ladders, stairs and platforms shall be inspected, maintained and kept safe and continuously operable by the Operating Company from Commencement of Service Date 1 until the Service End Date in accordance with the requirements of the *Forth Road Bridge Engineering Manual* and Legislation.

2.2.15 **Spare Parts Stocks and Spare Parts Inventory**

A required spare parts inventory is referred to in the *Forth Road Bridge Engineering Manual*. These required spare parts shall be separately identified within the list of equipment, materials, plant and spares owned by FETA to be transferred to Scottish Ministers and made available for use under this Contract which is required by Part 7 of Schedule 5 to be provided to the Director no later than 30 days prior to Commencement of Service Date 1. The Operating Company shall continuously maintain and update the spare parts inventory for the Forth Road Bridge in accordance with the requirements of Schedule 5 Part 7.

2.2.16 **FETA Inspection Records and Defects Management Database**

During Mobilisation Period 1, the Operating Company shall review the historical Forth Road Bridge Maintenance Database. The Operating Company shall either maintain the historical Forth Road Bridge Maintenance Database or develop a new SQL based inspection, Defects and repair management database for the Forth Road Bridge with equivalent functionality to the historical database. The Operating Company shall submit proposals including, as appropriate, the proposed database to the Director for his written consent no later than 60 days after Operations Commencement Date 1. The Operating Company shall continually use, update and licence the database and other associated software until the Service End Date. The Operating Company shall use the database as the main tool for recording and tracking the results of inspections and Defect identification, monitoring, management and repair. The system shall be accessible to the Director, the Performance Audit Group and any other parties appointed by the Scottish Ministers and the Operating

Company shall grant a licence on an irrevocable and unconditional basis to the Scottish Ministers for use of the database and software from Commencement of Service Date 1. At Service End Date, the database including all software and all rights therein shall be assigned by the Operating Company unconditionally to the Director and the software shall be provided with a perpetual licence. The database shall be retained by the Director for use by successor operating companies.

2.2.17 **Structural Condition Indices**

A scoring system shall be developed by the Operating Company to produce composite monitoring indicators for tracking the long-term condition of all structural elements on the Forth Road Bridge. The scoring system shall be submitted to the Director for his written consent no later than six months after Commencement of Service Date 1. The Operating Company shall update all composite indicators in the scoring system consented to by the Director at the end of the first Annual Period and thereafter in each Annual Period and in each Annual Period shall submit a report to the Director. The report shall as a minimum provide a summary of the results, changes in the composite indicators over the Period, the reasons for these changes and recommendations for addressing any deterioration in condition.

2.2.18 **Forth Road Bridge Structural Analysis Models**

During Mobilisation Period 1, the Operating Company shall procure the software required to run the structural analysis models developed by others for the assessment of the Forth Road Bridge. Subject to an Order, the Operating Company shall update the structural analysis models to reflect any changes to the Structure or undertake any analysis required. The Operating Company shall maintain the software licences from Commencement of Service Date 1 until the Service End Date and the Operating Company shall grant a licence on an irrevocable and unconditional basis to the Scottish Ministers for use of the analysis models from Commencement of Service Date 1. At Service End Date, the analysis models and all rights therein shall be assigned by the Operating Company unconditionally to the Director.

2.2.19 **Forth Road Bridge Security**

The Operating Company shall be responsible for ensuring the security of the Forth Road Bridge from Commencement of Service Date 1 to the Service End Date. During Mobilisation period 1 the Operating Company shall review any historic FETA policies and procedures and shall develop a Security Patrol Plan. The Security Patrol Plan shall be submitted to the Director for his written consent a minimum of 30 days prior to Commencement of Service Date 1. The Security Patrol Plan shall, as a minimum, include procedures for:

(i) Continuously monitoring all closed circuit television cameras,

(ii) Monitoring all alarms and intruder detection systems,

(iii) Undertaking security patrols including routine patrols and patrols in response to an incident, and

(iv) Operating a permit system for the control of access to all non public areas of the bridge including the internal areas of the towers and anchorages.

The Operating Company's responsibilities shall, as a minimum, include for guarding against acts of terrorism, malicious damage and structural damage and preventing unauthorised access to the Forth Road Bridge at all times.

The Operating Company shall undertake all monitoring and security patrols on a continuous basis 24 hours per day, seven days per week during each Annual Period.

2.2.20 **Cathodic Protection**

The Operating Company shall be responsible for the operation, monitoring and maintenance of the cathodic protection systems in operation on the approach viaduct piers and the ship protection to the main piers of the Forth Road Bridge in accordance with the operation and maintenance manuals from Commencement of Service Date 1 until Service End Date. The Operating Company shall undertake monthly functional checks of the systems to ensure that the system is functioning correctly and quarterly performance assessments to ensure that the performance criteria as set out in the operation and maintenance manuals are being met. These checks and assessments shall be undertaken by remote monitoring and the performance assessments shall include the recommendation and implementation of any changes required to the systems. Inspections of the systems including ground based cabinets, remote monitoring and control enclosures and the cathodic protection system including anodes and the concrete being protected shall be undertaken annually.

The Operating Company shall produce annual inspection reports and reports summarising the performance of each cathodic protection system in the period and shall submit these reports to the Director. The Operating Company shall administer the suppliers' warranties and raise the matter of continuation of warranties with the Director in writing no later than 90 days before the expiry of each.

3. M90 0-1 68 Queensferry Crossing

3.1.1 The Queensferry Crossing is shown in Figures 3.1.1.A and 3.1.1.B and the location is denoted within Figure 3.1.1.C. The completion and handover date is scheduled for 2016. The Queensferry Crossing has an overall length of 2638m metres including the approach viaducts and carry four lanes and two running hard shoulders of the M90 over the Firth of Forth. Traffic is sheltered from high winds by the windshields present on each edge of the crossing.

Refer to Figure 3.1.1.B; the cable-stayed bridge comprises two main central spans of 650m each between the three towers. The single boxes of the sidespans have lengths of 366m (S) and 354.4m (N), each with an additional pier tying down the span at approximately its one-third point. The southern approach viaduct comprises seven spans. The northern approach viaduct comprises a single span.

The bridge deck on the cable supported spans comprises a trapezoidal steel box girder with a composite reinforced concrete slab which is post-tensioned transversely. The southern approach viaduct consists of twin continuous steel box girders with composite reinforced concrete slab and with bearing supports on the piers.

In the zone between the southern approach viaduct and the cable-stayed bridge a transition section is employed such that the twin steel box girders of the approach spans are merged into the single steel box girder.

The mono-towers each comprise a reinforced concrete box. Each tower incorporates steel cable anchorages cast into the upper sections. The twin planes of cables emanating from each tower are anchored along the central corridor of the bridge deck between the two carriageways.

The viaducts are supported on a family of V-shaped piers. Each pier leg consists of a hollow rectangular concrete section.

Each of the towers is supported on a reinforced concrete foundation with each foundation either bearing directly on rock or mass concrete upfill bearing on rock.

The central tower foundation is buried underneath a covering of re-constituted material. All other foundations within the tidal zone are submerged.

The deck will be continuous from abutment to abutment with no intermediate movement joints. A movement joint will be provided at each abutment and the only point of longitudinal fixity of the deck is at the central tower.

Figure 3.1.1.A – Queensferry Crossing – Architectural Impression

Figure 3.1.1.B – Queensferry Crossing Elevation

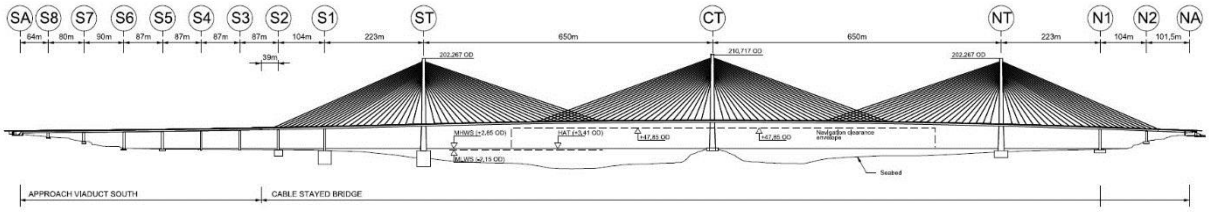

Figure 3.1.1.C – Queensferry Crossing Location

© Crown copyright. 2013

signed for and on behalf of The Scottish Ministers

……
Authorised Signatory

by ……Roy Brannen……

on …… December 2014……

at ……Glasgow……

signed for and on behalf of AMEY LG Limited

……
Director/Company Secretary/
Authorised Signatory*

by
……

on …… December 2014……

at ……Glasgow……

3.2 Particular Requirements for M90 0-1 68 Queensferry Crossing

3.2.1 The Queensferry Crossing Inspection and Maintenance Manual

The *Queensferry Crossing Inspection and Maintenance Manual* contains the requirements for inspection, operation and maintenance of the Queensferry Crossing; it has been written as a standalone document; any directions within it that appear to conflict with the requirements of this Contract, shall be raised with the Director in writing for determination within two weeks of discovery.

3.2.2 Maintenance Procedures

During Mobilisation Period 2, the Operating Company shall develop procedures in the Management System for the inspection, operation and maintenance of the Queensferry Crossing and shall submit these to the Director for his written consent a minimum of 30 Days prior to Commencement of Service Date 2. The Operating Company shall undertake the inspection, operation and maintenance of the Queensferry Crossing in accordance with the procedures consented to by the Director.

The *Queensferry Crossing Inspection & Maintenance Manua*l also includes operational and health and safety statements, sometimes expressed as requirements; when developing its own procedures, the Operating Company shall assess the suitability of each statement in light of its own responsibilities under health and safety Legislation. The manual shall be reviewed and updated by the Operating Company as described in Schedule 7 Part 6.

3.2.3 Structural Elements

In addition to the requirements of Schedule 7 Part 6, The Operating Company shall undertake the inspection, survey and maintenance of all structural elements of the Queensferry Crossing from Commencement of Service Date 2 until the Service End Date including as a minimum:

(i) Towers,

(ii) Decks,

(iii) Abutments,

(iv) Substations,

(v) Piers and associated pad foundations, cofferdams and caissons,

(vi) Stay Cables, tie-downs and assemblies,

(vii) Deck stay anchorages,

(viii) Tower stay anchorages,

(ix) Tower lateral bearings,

(x) Abutment movement joints,

(xi) Viaduct and abutment bearings,

(xii) Sign gantries,

(xiii) Parapets/ barriers,

(xiv) Wind shields, and

(xv) Noise barriers.

3.2.4 **Non-Structural Elements**

The Operating Company shall be responsible for the inspection, operation and maintenance of all non-structural elements from Commencement of Service Date 2 until the Service End Date including as a minimum:

(i) Deck drainage system,

(ii) Steel balustrades and fences,

(iii) Scour protection,

(iv) De-humidification system inside the deck boxes and towers,

(v) Supervisory control and data acquisition system,

(vi) Structural health monitoring system,

(vii) CCTV cameras,

(viii) Aviation and navigation warning lights,

(ix) Architectural lighting,

(x) Other mechanical and electrical equipment,

(xi) Fixtures and fittings within the abutment and substations.

3.2.5 **Not used**

3.2.6 **Inspection Frequencies**

The Operating Company shall note that a detailed inspection regime as outlined within the *Queensferry Crossing Inspection and Maintenance Manual* for the Queensferry Crossing shall require General Inspections of specific elements to be undertaken at different frequencies from the maximum two yearly interval stated in paragraph 3.3.1 of Schedule 7 Part 6. Where described in the manual, the frequency of inspection shall be determined using a criticality and vulnerability assessment in accordance with the *Queensferry Crossing Inspection and Maintenance Manual* and paragraph 3.2.8 of this Part. The Operating Company shall continuously review these assessments as a part of its inspection planning activity and any changes to the planned inspection programmes and frequencies shall be submitted to the Director for his written consent as a part of the annual inspection reporting process.

3.2.7 Elements not covered by the Queensferry Crossing Inspection and Maintenance Manual or criticality and vulnerability assessment shall be subject to inspections in accordance with the requirements of *Transport Scotland Interim Amendment No 33*, *BD63* and the *Transport Scotland Inspection Manual – Principal Inspection of Trunk Road Structures and Location System*.

3.2.8 **Inspections on Queensferry Crossing**

(i) The intervals for element General Inspections are determined by a criticality and vulnerability ratings procedure using the method described in the *Queensferry Crossing Inspection and Maintenance Manual,*

(ii) At least one full Principal Inspection of the Queensferry Crossing shall be completed 90 days prior to the expiry of the Queensferry Crossing defects

notification period or 90 days prior to the Initial Service End Date, whichever occurs first. Where the Commencement of Service Date 2 to Service End Date duration extends beyond six years, the subsequent Principal Inspections shall be undertaken in accordance with the inspection programme as defined in Schedule 7 Part 6 and within the maximum time periods between scheduled inspections. The schedule of Principal Inspections shall be subject to the written consent of the Director,

(iii) Subject to an Order, the Operating Company shall undertake an inspection of the Queensferry Crossing following Commencement of Service Date 2. The inspection shall take the form of a General Inspection and shall include but not be limited to structural elements, carriageway, drainage, movement joints, mechanical, electrical, hydraulic and plumbing systems and all access equipment and facilities. The inspection Records shall be uploaded to the inspection, Defects and repair management database for the Queensferry Crossing and the structures management function of the Integrated Roads Information System in accordance with the requirements of this Part and Schedule 7: Part 6, and

(iv) For the Queensferry Crossing, Principal and General Inspection reports shall be submitted in each Annual Period a minimum of 30 days prior to the review of the structures maintenance schedule as defined in Schedule 7 Part 6 for the sets of structural parts inspected in the preceding period. The first such submission shall take place no earlier than five months after and no later than 11 months after the Commencement of Service Date 2.

3.2.9 **Positional Surveys**

The Operating Company shall produce a Principal Inspection survey procedure for the Queensferry Crossing and submit it to the Director for written consent no later than Commencement of Service Date 2. Surveys shall be scheduled with Principal Inspections using conventional optical survey methods. These may be combined with relevant, verified and datum-referenced information from the Structural Health Monitoring System and the Queensferry Crossing construction records provided that checks are undertaken by the Operating Company, the surveys shall measure and record:

(i) Horizontal alignment and levels of the bridge and viaduct spans at pier and midspan locations,

(ii) Pier and tower foundation and abutment levels and transverse tilts,

(iii) Navigational clearances at the bridge midspans and corners of the navigational envelopes,

(iv) Longitudinal and transverse verticality of the towers,

(v) Longitudinal verticality of the piers,

(vi) Gaps at the abutment expansion joints, and

(vii) Mean effective temperatures of the deck box throughout the survey period.

(viii) Verticality values shall be absolute and gravity-referenced.

The Operating Company shall ensure that all structural baseline measurements and positions are established for long-term monitoring and be repeatably referable to permanent datum benchmarks for horizontal position and level by taking at least two independent sets of measurements to an accuracy of 2mm.

The first positional survey shall be completed to establish the reference data set no later than 12 months after Commencement of Service Date 2 and repeated thereafter to coincide with the completion of each Principal Inspection cycle.

3.2.10 **Mechanical & Electrical and Plumbing Installations (Queensferry Crossing)**

The Operating Company shall be responsible for the inspection, operation, maintenance and certification of all mechanical, electrical and plumbing installations in accordance with the requirements of the *Queensferry Crossing Inspection and Maintenance Manual* from Commencement of Service Date 2 until the Service End Date. If inspection and maintenance requirements are not adequately covered in the *Queensferry Crossing Inspection and Maintenance Manual,* manufacturer's recommendations and Legislation shall be adhered to.

The sub-systems forming part of the mechanical, electrical and plumbing systems include those listed in Table 3.2.1 and shall include as a minimum:

(i) Power systems generally including substations, standby generators and backup supplies (uninterruptable and essential power) at each abutment,

(ii) Electrical installations include marine navigation, aircraft obstruction and architectural display lights and internal lighting to the entire crossing,

(iii) Security systems, CCTV cameras, communications and the fire protection system,

(iv) Dehumidification systems for the deck boxes, and tower voids,

(v) Weigh in Motion (WIM) system – including calibration,

(vi) Structural Health Monitoring System,

(vii) SCADA System and associated subsystems, and

(viii) Intelligent transport system gantries, which are a part of the Traffic Scotland Equipment.

Having reviewed the *Queensferry Crossing Inspection and Maintenance Manual*, the Operating Company shall develop procedures and schedules for the maintenance, inspection, operation and monitoring of all mechanical, electrical and plumbing equipment all pursuant to manufacturers' recommendations and submit them to the Director for written consent not later than 60 days prior to Commencement of Service Date 2.

The Operating Company shall send representatives to attend the testing and the commissioning of the mechanical, electrical and plumbing, and control systems both on and off site sufficient to enable staff to operate and maintain the systems safely and effectively.

3.2.11 **Access Systems (Queensferry Crossing)**

The Operating Company shall be responsible for the inspection, operation, maintenance, storage and servicing (including mechanical and electrical

installations) of all Access Systems on the Queensferry Crossing from Commencement of Service Date 2 until Service End Date and shall ensure that all Access Systems including any Access System held in storage shall remain certified for use at all times. During Mobilisation Period 2, the Operating Company shall develop procedures for the inspection, operation and maintenance of the Access Systems and shall submit these to the Director for his written consent a minimum of 30 days prior to Commencement of Service Date 2. Inspection and maintenance requirements shall comply with the recommendations set out in the manuals for each system called up in the *Queensferry Crossing Inspection and Maintenance Manual.*

The following types of Access Systems shall be maintained and kept in certification at all times:

(i) Underdeck access gantries,

There are two pairs of underdeck gantries serving the main bridge suspended Structure and a total of two gantries capable of serving the north and south approach spans.

(ii) Tower cradles,

There are four tower cradles, two to access the tower corners and two to access the arc-faces.

(iii) Stay Cable Gantries,

There are two stay cable access gantries.

(iv) Deck Shuttles,

There are two deck shuttles running on overhead rails that run inside the deck boxes for the full length of the Crossing. One is housed next to each abutment.

(v) Tower Lifts,

There are a total of three internal tower lifts, one operating in each tower. Type: rack and pinion.

(vi) Piers,

All rope access anchor points.

All Access Systems shall be maintained by the Operating Company in accordance with the inspection and maintenance manuals relevant to each Access System such that access and full functionality for their intended use shall be retained at all times.

The Operating Company shall provide secure, sheltered and enclosed storage facilities for all Access Systems not in use on the Queensferry Crossing.

The Operating Company shall send representatives to witness the testing and the commissioning of the Access Systems both on and off site sufficient to enable staff to operate and maintain the systems safely and effectively.

3.2.12 Access Walkways, Ladders, Stairs and Platforms

All access walkways, ladders, stairs and platforms shall be inspected, maintained and kept safe and continuously operable by the Operating Company from

Commencement of Service Date 2 until the Service End Date in accordance with the *Queensferry Crossing Inspection and Maintenance Manual* and Legislation.

3.2.13 **Spare Parts Inventory**

A required spare parts inventory is referred to in the *Queensferry Crossing Inspection and Maintenance Manual*. These required spare parts shall be separately identified within the list of equipment, materials, plant and spares made available for use under this Contract which is required by Part 7 of Schedule 5 to be provided to the Director no later than 30 days after Commencement of Service Date 2. The Operating Company shall continuously store all the spare parts and shall maintain and update the spare parts inventory for the Queensferry Crossing in accordance with the requirements of Schedule 5 Part 7.

3.2.14 **Detailed Inspection Records and the Defects and Repair Management Database**

During Mobilisation Period 2, the Operating Company shall develop an electronic Structured Query Language (SQL) inspection, Defects and repair management database for the management of all inspection and Defect management information for the Queensferry Crossing. The Operating Company shall submit a proposed design for the database to the Director for his written consent no later than 60 days after Operations Commencement Date 2. The Operating Company shall complete the commissioning of the database no later than 30 days prior to Commencement of Service Date 2. The database shall be used by the Operating Company for the issue and management of work packages for repair actions and monitoring until the Service End Date. The system shall be accessible to the Director, the Performance Audit Group and any other parties appointed by the Director and the Operating Company shall grant a licence on an irrevocable and unconditional basis to the Scottish Ministers for use of the database and software from Commencement of Service Date 2. At Service End Date, the database including all software and all rights therein shall be assigned by the Operating Company unconditionally to the Director and the software shall be provided with a perpetual licence. The database shall be retained by the Director for use by successor operating companies.

The database server application and any necessary client applications shall be supplied by the Operating Company along with hardware as necessary and shall be based on the same Structured Query Language SQL server database application used for the Queensferry Crossing Structural Health Monitoring System. Thereafter, Principal Inspection, General Inspection and Special Inspections data, Defect monitoring and repair activity for the Queensferry Crossing shall be logged in the system. The system shall also be configured to serve a processed set of queries required to generate data reports for the structures management function of the Integrated Roads Information System. As a minimum, the system shall have equivalent functionality to the historical Forth Road Bridge Defect and Repair Management Database and shall include the storage of photographs.

It shall include as a minimum the following features:

(i) Integration with the Queensferry Crossing as-built drawing database and the project archive referencing system,

(ii) Compatibility with the component referencing system, inspection rating system and defect classification and rating system and bridge referencing

system (as defined in the *Queensferry Crossing Inspection and Maintenance Manual*),

(iii) Structural element level data retrieval,

(iv) Search by location code, and

(v) Defect and repair tracking with linking to repair Records and safe working procedures, method statements and weld procedures and preparation of Operations.

Typical element resolution will be to the level of individual bracings or stiffeners but not welds or bolts unless particularly substantial. Fabrications or composite entities shall be subdivided to pre-assembly elements or facets according to how they may be adequately represented on inspection pro formas.

The Operating Company shall continually use, update and licence the database and other associated software until the Service End Date.

3.2.15 **Structural Condition Indices**

A scoring system shall be developed by the Operating Company to produce composite monitoring indicators for tracking the long-term condition of structural elements on the Queensferry Crossing. The scoring system shall be submitted to the Director for his written consent no later than six months after Commencement of Service Date 2. The Operating Company shall update all composite indicators in the scoring system consented to by the Director at the end of the first Annual Period following Commencement of Service Date 2 and thereafter in each Annual Period. In each Annual Period the Operating Company shall submit a report to the Director. The report shall as a minimum provide a summary of the results, changes in the composite indicators over the Period, the reasons for these changes and recommendations for addressing any deterioration in condition.

3.2.16 **Operation of the Queensferry Crossing Structural Health Monitoring System**

The Operating Company shall be responsible for the monitoring, inspection, operation and maintenance of the Structural Health Monitoring System in accordance with the details of the *Employer's Delivery Team Memorandum - Operation and Maintenance of the Queensferry Crossing Structural Health Monitoring System* and the Operation and Maintenance Manual for the Structural Health Monitoring System. The Operating Company shall develop procedures for the monitoring, inspection, operation and maintenance of the structural health monitoring system and shall submit these to the Director for his written consent 30 Days prior to Commencement of Service Date 2. The procedures shall be developed with the objective of ensuring that the system has the capability to capture critical or rare events at all times. The Operating Company shall record the occurrence of faults and problems with the Structural Health Monitoring System during the Queensferry Crossing defects notification period.

3.2.17 **Structural Health Monitoring System Routine Tasks**

The Structural Health Monitoring System routine tasks shall include as a minimum development of procedures for and execution of the following:

(i) Structural Health Monitoring System inspection and maintenance,

(ii) Operational monitoring,

(iii) Logging and keeping records of Structural Health Monitoring System maintenance,

(iv) Assessment of system performance,

(v) Data management – archiving and warehousing,

(vi) Annual checks on data retrieval of randomly selected warehoused data,

(vii) Trigger level refinement and acquisition adjustment, and

(viii) Optimising stored data volumes.

3.2.18 **Operational Monitoring**

The Operating Company shall use the Structural Health Monitoring System for certain operational aspects. These shall include as a minimum:

(i) Windspeed monitoring,

(ii) Overweight vehicle detection and assessment,

(iii) Navigational clearance monitoring,

(iv) Winter Service and extreme weather monitoring, and

(v) Meteorological monitoring.

3.2.19 **Refinement of Structural Health Monitoring System Configuration**

Following the first Winter Service Period after Commencement of Service Date 2, the Operating Company shall review the triggering criteria for the Structural Health Monitoring System. The Operating Company shall submit a report detailing the findings of this review to the Director no more than 30 days after the first Winter Service Period following Commencement of Service Date 2. This report may include proposals for the development and refinement of the triggering criteria.

Subject to an Order, the Operating Company shall modify the triggering criteria for the Structural Health Monitoring System.

3.2.20 **Alert Procedures**

During Mobilisation Period 2, the Operating Company shall develop procedures for reacting to all structural alerts generated by the Structural Health Monitoring System and for providing reports on structural status and shall submit these procedures to the Director for his written consent no later than 60 Days after Commencement of Service Date 2. These procedures shall cover aspects including as a minimum change in geometry combined with the results of close visual inspections of parts identified for inspection in advance with relevance to the type and location of the source of the alert.

These procedures shall cover the method and scope of physical inspection required in response to an alert, the required response times and the reporting requirements and report distribution for each event type.

3.2.21 **Field Measurements Associated with Principal Inspection**

Equipment for field measurement of response will be supplied by the Director as a part of the Structural Health Monitoring System following system commissioning

The Operating Company shall be responsible for undertaking field measurements as a part of every Principal Inspection of the Queensferry Crossing in accordance with the *Employer's Delivery Team Memorandum Operation and Maintenance of the Queensferry Crossing Structural Health Monitoring System Operation* and the Operation and Maintenance Manual for the Structural Health Monitoring System. The field measurements shall record and their associated reports shall present analyses of:

(i) Changes to substructure and stay natural frequencies,

(ii) Changes to static and quasi-static geometry measured through the permanent system and conventional survey methods, and

(iii) The possible or established causes of each of the above.

The field measurement reports shall be included in the Principal Inspection submission at the completion of the full Principal Inspection cycle.

3.2.22 **Structural Health Monitoring System Reporting Requirements**

The system will produce report sets at different intervals designed to meet different aims. The format, number and distribution list for these reports shall be agreed with the Director at least 30 days prior to Commencement of Service Date 2. The Operating Company shall distribute this information to the lists of recipients as consented to by the Director in writing. These reports comprise:

(i) Annual Interpretative Reports,

The Operating Company shall produce annual interpretative reports and submit these to the Director no later than 60 days after the end of each Annual Period.

The interpretive reports shall summarise the data gathered for each sensor type over the period, the interpretation of the data including any trends or results which are not as expected together with any recommendations for extended data analysis required to support any maintenance recommendations along with recommendations for monitoring in the forthcoming year.

(ii) Routine Structural Health Monitoring System Reports,

The Operating Company shall produce routine quarterly reports of system data that summarise the main processed data sets and any monitoring issues identified on subjects for monitoring. These reports shall be submitted to the Director for his review a maximum of 30 days after the end of each quarter in the Annual Period.

These quarterly reports shall include results in standardised forms reporting on:

(a) Statistical data of all channels (such as means and standard deviations),

(b) Resampled low resolution time histories,

(c) Structure geometrical and positional information,

(d) Natural Frequencies of identified components,

(e) Event summaries and timelines,

(f) System status reports, including storage status, and

(g) Activity summary (such as which inspections or measurement campaigns have been carried out in the reporting period).

These reports shall also contain information on data availability in accordance with the Structural Health Monitoring System Performance Indicators and system repair response times.

(iii) Special Reports,

The Operating Company shall produce a report on each extreme event including weather and loading events, where trigger levels are exceeded or other incidents that arise from Structural Health Monitoring System monitoring. These reports shall include a description of the event, a summary of the results from the Structural Health Monitoring System, any Special Inspections or structural checks undertaken and the conclusions from the findings of the investigation and review. The Operating Company shall submit the report to the Director for his review within 10 days of each event occurring.

(iv) Sensor Classification for Performance Measurement,

Class A components shall include the main acquisition backbone and primary acquisition storage; the live and backed up data sets; response and tilt measurement subsystem; primary wind and selected strain measurement subsystems; embedded strain sensor cabling and signal conditioning system: live traffic measurement systems and data set and any system part that affects data captured of rare events.

Class B: are those subsystems not in Class A.

A channel classification schedule shall be submitted to the Director for consent no later than 30 days prior to Commencement of Service Date 2.

The Operating Company shall report the failure of an embedded or unreachable component to the Director. Subject to an Order, the Operating Company shall replace any embedded component.

(v) Structural Health Monitoring System Faults and Faulty Component Replacement,

The Operating Company shall monitor and report on any faults to any sensor, associated cabling or signalling system to the Director within 3 days of their detection. Subject to an Order, the Operating Company shall repair faults or replace components within the time periods stated in the Order.

(vi) Spares for the Structural Health Monitoring System,

During Mobilisation Period 2, the Operating Company shall compile an inventory of spare parts that have been supplied as part of the Structural Health Monitoring System and not more than 30 Days following Commencement of Service Date 2 the Operating Company shall submit this inventory to the Director. The Operating Company shall be responsible for cataloguing, maintaining and updating the spares listed in the Structural

Health Monitoring System Operations and Maintenance Manual from Commencement of Service Date 2 until the Service End Date. The Operating Company shall only use spare parts from the inventory in the operation and maintenance of the Queensferry Crossing Structural Health Monitoring System. A full complement of spare parts as listed in the inventory shall be handed over to the incoming operating company at the Service End Date.

(vii) Witnessing of Load Tests,

The Operating Company shall witness the load testing carried out on the Queensferry Crossing during commissioning of the bridge and witness the associated Structural Health Monitoring System report production.

and,

(viii) As-Built Geometry of the Queensferry Crossing,

Within 30 days of its receipt from the Director, the Operating Company shall review the as-built geometrical information produced from the construction of the Queensferry Crossing in order to be familiar with the information and how it relates to the baseline values in the Structural Health Monitoring System database for ongoing monitoring and the production of quarterly and annual reports to the Director. This includes the navigational clearance and data on stay relaxation.

3.2.23 **Operation of the Queensferry Crossing Supervisory Control and Data Acquisition Systems**

The Supervisory Control and Data Acquisition system monitors and controls mechanical, electrical and plumbing systems on the Queensferry Crossing. The Operating Company shall monitor, operate and maintain the Supervisory Control and Data Acquisition system in accordance with the requirements of the Operation and Maintenance Manuals for the Supervisory Control and Data Acquisition System from Commencement of Service Date 2 until the Service End Date.

The Operating Company shall develop procedures for the monitoring, operation and maintenance of the Supervisory Control and Data Acquisition system and shall submit these to the Director for his written consent 30 Days prior to Commencement of Service Date 2. These procedures shall be developed with the objective of ensuring that the system is operational and effective at all times and shall include proposals for monitoring the system 24 hours per day, seven days per week during the Annual Period and the maximum time periods for reacting to warnings, alarms or alerts identified by the system and the identification and replacement of faulty parts.

Table 3.2.1 – Mechanical, Electrical and Plumbing Systems Summary

MEP SCADA Subsystems
Dehumidification systems
Water cleansing system
Security systems (CCTV/Access/Intrusion)
All lighting systems
Fire detection system
Lifts, including Tower Lifts
ITS Power Monitoring
Structural Health Monitoring System
Power Supply systems
Electrical Distribution System
Electrical Distribution System (LV)
UPS and EPS Distribution Systems
Building Management System
CCTV Systems
Server rack

3.2.24 **Supervisory Control and Data Acquisition System Routine Tasks**

The procedures for the monitoring, operation and maintenance of the Supervisory Control and Data Acquisition system shall include the following as a minimum:

(i) Supervisory Control and Data Acquisition system,

(ii) Inspection and maintenance,

(iii) Inspection and maintenance of mechanical, electrical and plumbing systems whether associated with the Supervisory Control And Data Acquisition system or not,

(iv) Continuous operational monitoring,

(v) Responding to warnings and indicators including response time for responding to and dealing with faults,

(vi) Logging and keeping records of Supervisory Control and Data Acquisition system maintenance,

(vii) Assessment of Supervisory Control and Data Acquisition system performance,

(viii) Data management – archiving and warehousing, and

(ix) Maintenance and cataloguing of spares listed in the Supervisory Control and Data Acquisition System Operations and Maintenance Manual throughout the Contract Period.

3.2.25 **Fixing of Supervisory Control And Data Acquisition Faults and Faulty Component Replacement**

The Operating Company shall monitor and report on any faults to any part of the Supervisory Control and Data Acquisition system to the Director within three days of their detection. Subject to an Order, the Operating Company shall repair faults or replace components within the time periods stated in the Order save where such need for repair arises from the Operating Company not complying with its obligations in this Part in which case the cost of such repair and or replacement shall be borne by the Operating Company.

3.2.26 **Structural Health Monitoring System and Supervisory Control and Data Acquisition Training**

During Mobilisation Period 2 and in the period following Commencement of Service Date 2 the Operating Company shall ensure that all the required suitably qualified staff attend the training provided by the Director in connection with the Structural Health Monitoring system and Supervisory Control and Data Acquisition system.

3.2.27 **Software for Structural Analysis Models**

Prior to the end of mobilisation Period 2, the Operating Company shall procure the software required to create structural analysis models of the Queensferry Crossing and undertake any analysis required. Subject to an Order, the Operating Company shall produce structural analysis models of the Queensferry Crossing and carry out structural analysis of the bridge. The Operating Company shall, subject to an Order, update the models to reflect any changes to the structure. The Operating Company shall maintain the software licences from Commencement of Service Date 2 until Contract End Date and the Operating Company shall grant a licence on an irrevocable and unconditional basis to the Scottish Ministers for use of the analysis models from Commencement of Service Date 2. At Service End Date, the analysis models and all rights therein shall be assigned by the Operating Company unconditionally to the Director.

3.2.28 **Queensferry Crossing Security**

The Operating Company shall be responsible for ensuring the security of the Queensferry Crossing from Commencement of Service Date 2 to the Service End Date.

During Mobilisation period 2 the Operating Company shall update the Security Patrol Plan to take account of Network 2 and shall submit the Security Patrol Plan to the Director for his written consent a minimum of 30 days prior to Commencement of Service Date 2. The updated Security Patrol Plan shall, as a minimum, include procedures with respect To Network 2 for:

(i) Continuously monitoring all closed circuit television cameras,

(ii) Monitoring all alarms and intruder detection systems,

(iii) Undertaking security patrols including routine patrols and patrols in response to an incident, and

(iv) Operating a permit system for the control of access to all non public areas of the bridge including the internal areas of the towers and deck boxes.

The Operating Companies responsibilities shall, as a minimum, include guarding against acts of terrorism, malicious damage and structural damage and preventing unauthorised access to the Queensferry Crossing at all times.

The Operating Company shall undertake all monitoring and security patrols on a continuous basis 24 hours per day, seven days per week during the Annual Period.

4. BP Oil Pipeline Protection Structures

Figure 4.1.1.A – Location of the M90 0-1 33 BP Oil Pipeline Protection Structure (ESQ06)

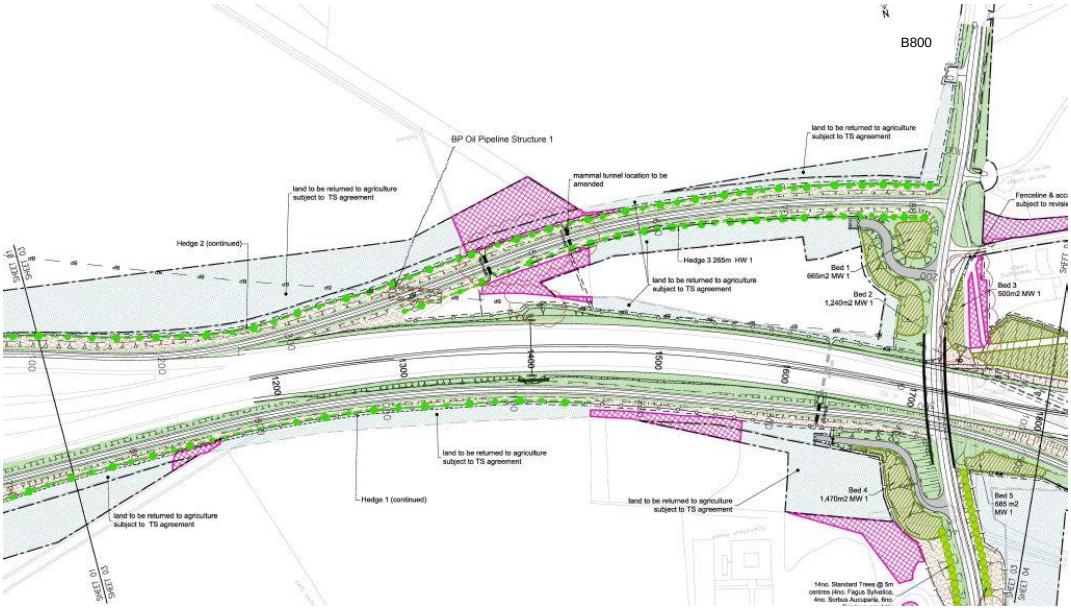

signed for and on behalf of The Scottish Ministers

by ……...Roy Brannen…….

on …..…… December 2014……

at ……Glasgow……..……

……..……
Authorised Signatory

signed for and on behalf of AMEY LG Limited

by

……..……

on ……..… December 2014……

at ……Glasgow……..….

……..…
Director/Company Secretary/ Authorised Signatory*

Figure 4.1.2.A – Location of the M90 0-1 37 BP Oil Pipeline Protection Structure (ESQ07)

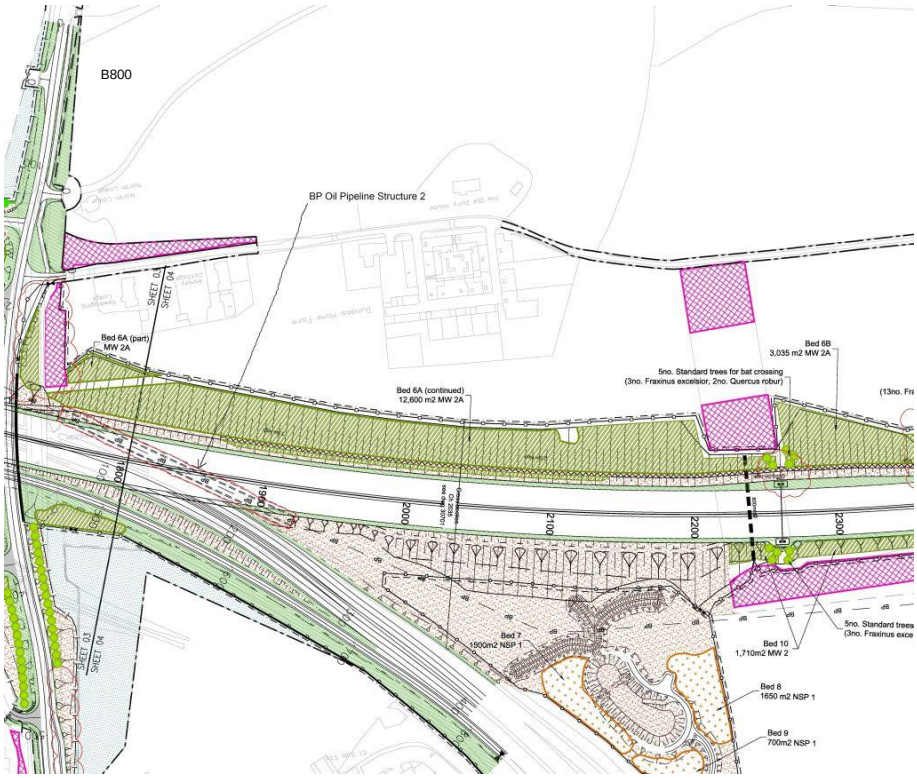

Figure 4.1.3.A – Location of the M90 0-1 46 BP Oil Pipeline Protection Structure (ESQ05)

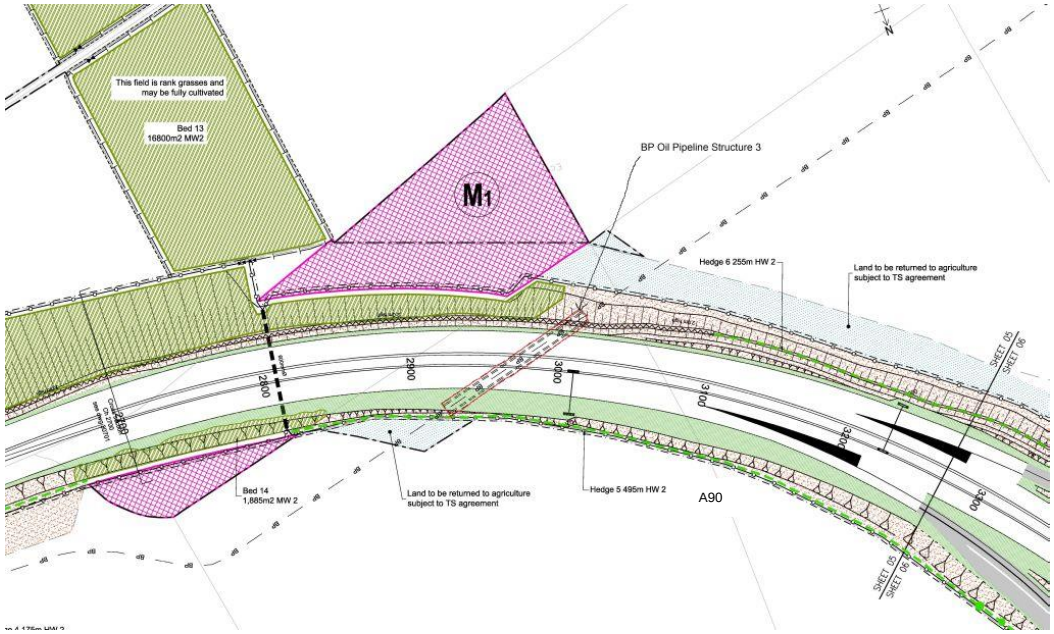

signed for and on behalf of The Scottish Ministers

by ……..Roy Brannen…….

on …….. December 2014

at ……Glasgow……..

……
Authorised Signatory

signed for and on behalf of AMEY LG Limited

by ……

on ….. December 2014

at ……Glasgow……..

……
Director/Company Secretary/
Authorised Signatory*

4.1 Particular Requirements for the BP Oil Pipeline Protection Structures

The Operating Company shall, as a minimum, undertake annual checks for stray currents in each structure arising from the cathodic protection system installed on the BP oil pipeline. The results shall be submitted to the Director a minimum of 30 days prior to the end of each Annual Period.

5. New B800 Bridge (ESQ04)

Figure 5.1.1.A – Location of the M90 0-1 35 New B800 Bridge (ESQ04)

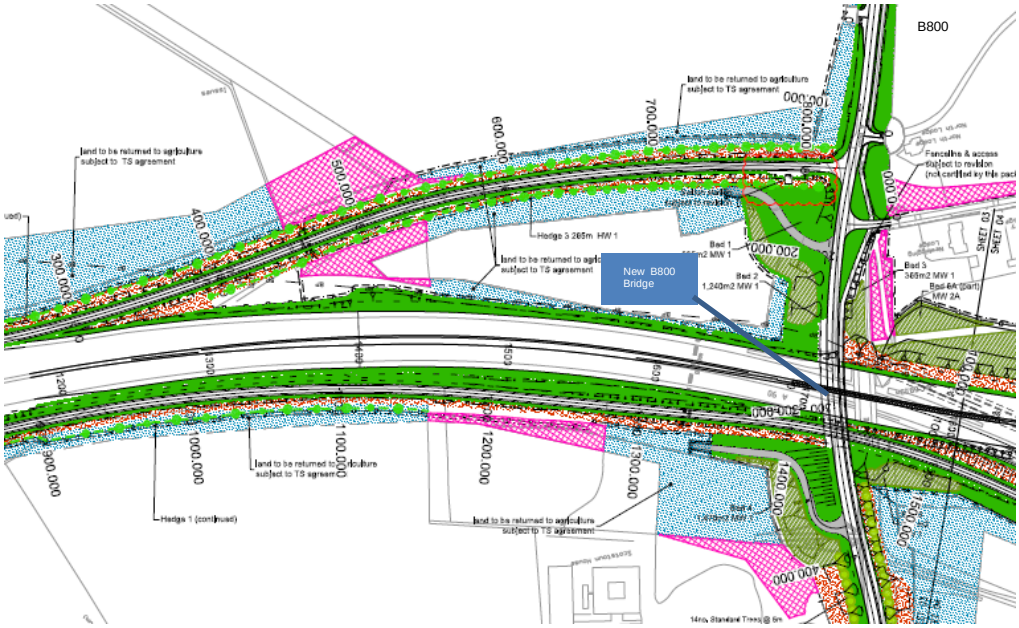

5.1 Particular Requirements for the New B800 Bridge

The Operating Company shall, as a minimum, undertake annual checks for stray currents in the New B800 Bridge arising from the cathodic protection system installed on the BP oil pipeline. The results shall be submitted to the Director a minimum of 30 days prior to the end of each Annual Period.

signed for and on behalf of The Scottish Ministers

by ……..Roy Brannen…….

on …….. December 2014

at ……Glasgow……..

……..……
Authorised Signatory

signed for and on behalf of AMEY LG Limited

by ……..……

on ….. December 2014

at ……Glasgow……..

……..……
Director/Company Secretary/
Authorised Signatory*

This is Annex 7.7/B to Schedule 7 Part 7 referred to in the foregoing Agreement between Scottish Ministers and Amey LG Limited.

SCOTTISH MINISTERS' REQUIREMENTS

SCHEDULE 7 PART 7

STRUCTURES WITH PARTICULAR REQUIREMENTS

ANNEX 7.7/B – Documents for Structures with Particular Requirements

SCOTTISH MINISTERS' REQUIREMENTS

SCHEDULE 7 PART 7

STRUCTURES WITH PARTICULAR REQUIREMENTS

ANNEX 7.7/B – Documents for Structures with Particular Requirements

These documents are reference documents.

Forth Road Bridge
Forth Road Bridge Engineering Manual
FETA historical Forth Road Bridge inspection schedules and maintenance routines.
• General Operatives Work Detail
• Electrical 10 Year Plan
• Maintenance Plan
• Electrical Integrated Plan
• Schedule of Routines
• Electrical Maintenance Schedule
• Engineering Maintenance Schedule
• Schedule of Inspections
• Joiners Maintenance Schedule
• Grade IV Maintenance Schedule
• Mechanic Maintenance Schedule
• Painters Maintenance Schedule
• Riggers Maintenance Schedule
• Appendix 1 – Vulnerability and Criticality Assessment
• Criticality Vulnerability Inspection Programme
Register of Programmed Special Inspections for the Forth Road Bridge
Queensferry Crossing
Queensferry Crossing Inspection and Maintenance Manual.

This is Annex 7.7/C to Schedule 7 Part 7 referred to in the foregoing Agreement between Scottish Ministers and Amey LG Limited.

SCOTTISH MINISTERS' REQUIREMENTS

SCHEDULE 7 PART 7

STRUCTURES WITH PARTICULAR REQUIREMENTS

ANNEX 7.7/C – Forth Road Bridge– List of Access Systems Exempt from Full-Time Certification.

SCOTTISH MINISTERS' REQUIREMENTS

SCHEDULE 7 PART 7

STRUCTURES WITH PARTICULAR REQUIREMENTS

ANNEX 7.7/C – Forth Road Bridge– List of Access Systems Exempt from Full-Time Certification

Forth Road Bridge
“Beeche” Tower Painting Cradle System
Hanger Replacement Gantry from 1990 Strengthening Works
Main Cable Inspection Gantries

SCOTTISH MINISTERS' REQUIREMENTS

SCHEDULE 7 PART 8

SEVERE WEATHER SERVICES

CONTENTS **Page No.**

1.	**INTRODUCTION**	**1**
1.1	General	1
2.	**PLANNING ARRANGEMENTS FOR SEVERE WEATHER EVENTS**	**1**
2.1	General	1
2.2	Information Gathering and Impact Assessment	1
2.3	Liaison and Coordination	2
2.4	Information Management and Dissemination	2
3.	**SEVERE WEATHER MANAGEMENT PLANS**	**2**
3.1	General	2
3.2	Wind Management Plans – Unit Wide Considerations	3
3.3	Wind Management Plans for the Principal Crossings	3
3.4	Overhead Ice Hazard Management Procedure – Principal Crossings	5
3.5	Flooding Management Plans	5
3.6	Landslides Management Plans	6
4.	**INCIDENT RESPONSE OPERATIONS FOR SEVERE WEATHER EVENT**	**6**
4.1	General	6
4.2	Post Incident Inspections for the Structures – Response Procedure	6
4.3	Records	7

SCOTTISH MINISTERS' REQUIREMENTS

SCHEDULE 7 PART 8

SEVERE WEATHER SERVICES

1. INTRODUCTION

1.1 General

1.1.1. This Part identifies the planning activities the Operating Company shall undertake in preparation for Incident Response Operations relating to Severe Weather events.

1.1.2. The Operating Company shall undertake planning activities for Severe Weather events relating to the Winter Service in accordance with the requirements of Schedule 7 Part 2.

1.1.3. The requirements of this Part shall be undertaken as part of the Incident Response Plan and Incident Response Operations stated in Schedule 7 Part 3.

1.1.4. The Operating Company shall include documented procedures in the Management System to deliver the requirements of this Part.

2. PLANNING ARRANGEMENTS FOR SEVERE WEATHER EVENTS

2.1 General

2.1.1 The Operating Company's planning activities for responding to Severe Weather events shall include the development and use of management plans, processes and systems. The Operating Company shall establish such arrangements in advance of a Severe Weather event occurring to enhance its Incident Response Operations and mitigation activities as stated in Schedule 7 Part 3.

2.2 Information Gathering and Impact Assessment

2.2.1 The Operating Company shall establish its arrangements for gathering and processing information on the key characteristics of any Severe Weather event that occurs or is predicted to occur within the Unit. Such information shall include the nature and severity of the Severe Weather event and its potential impact on the operation of the Unit.

2.2.2 The Operating Company shall procure the services of an expert weather forecasting service to assist it with the prediction and management of Severe Weather events. This expert weather forecasting service shall be operational seven days a week during Normal Working Hours to provide specific, timely and accurate weather forecasts and advance warnings of Severe Weather events predicted to occur within the Unit. Such information shall, as a minimum, be specific to the conditions of the Unit.

2.2.3 The expert weather forecasting service for Severe Weather events is in addition to the Winter Service weather forecasting requirements stated in Schedule 7 Part 2.

2.2.4 No later than 30 days prior to Commencement of Service Date 1, the Operating Company shall submit to the Director for written consent, details of its proposed expert weather forecasting service for Severe Weather events.

2.2.5 The Operating Company shall provide suitably trained designated personnel who are able to receive, continuously monitor and interpret information provided by its expert weather forecasting service for Severe Weather events. Such personnel shall be authorised to make key decisions on the implementation of the Incident Response Operations relating to Severe Weather events.

2.3 Liaison and Coordination

2.3.1 No later than 30 days prior to Commencement of Service Date 1, the Operating Company shall:

(i) identify all Operational Partners that have involvement in dealing with Severe Weather events,

(ii) agree the communication arrangements between itself, the Traffic Scotland Operations and Infrastructure Service Contractor and other relevant Operational Partners during a Severe Weather event, and

(iii) ensure a mutual understanding of the roles and responsibilities of the Operating Company and the relevant Operational Partners during a Severe Weather event.

2.3.2 The Operating Company's procedures contained within the Management System shall include as a minimum:

(i) details of all relevant Operational Partners,

(ii) the arrangements for disseminating accurate, timely and relevant Severe Weather information to the Traffic Scotland Operations and Infrastructure Service Contractor and other Operational Partners,

(iii) the communication arrangements between the Operating Company, the Traffic Scotland Operations and Infrastructure Service Contractor and other relevant Operational Partners to be followed during a Severe Weather event, and

(iv) the roles and responsibilities of the Operating Company and all relevant Operational Partners for dealing with a Severe Weather event.

2.3.3 From Commencement of Service Date 1 until the Service End Date, the Operating Company shall attend regular meetings with all relevant Operational Partners to review and update the communication arrangements and enable the integration of communication systems and technology.

2.4 Information Management and Dissemination

2.4.1 The Operating Company shall establish and record within the Management System, the arrangements for managing and disseminating Severe Weather information to relevant Operational Partners during the implementation of the Incident Response Operations in accordance with the requirements of Schedule 7 Part 3.

3. SEVERE WEATHER MANAGEMENT PLANS

3.1 General

3.1.1 Severe Weather management plans include all of the procedures and plans defined in this Part.

3.1.2 The Operating Company shall be responsible for the production of Severe Weather management plans as a part of the Incident Response Plan as stated in Schedule 7 Part 3 and their submission to the Director for written consent.

3.1.3 The Operating Company shall manage and implement all Severe Weather management plans and related Incident Response Operations.

3.1.4 The Operating Company shall review and update all Severe Weather management plans including those at new Disruption Risk Sites at the same time as undertaking the review and update of the Incident Response Plan as stated in Schedule 7 Part 3. The Operating Company shall submit such plans to the Director for written consent.

3.1.5 All Severe Weather management plans shall contain details of the arrangements for Incident Response Operations and mitigation activities at the Disruption Risk Sites where Severe Weather has been identified as a cause of disruption. Such plans shall include actions for dealing with high winds, flooding and landslides as stated in this Part.

3.1.6 All Severe Weather management plans shall contain details of any Mutual Aid arrangements.

3.1.7 Severe Weather management plans shall form part of Operating Company's Disruption Risk Management Plan as stated in Schedule 7 Part 3.

3.2 Wind Management Plans – Unit Wide Considerations

3.2.1 The Operating Company shall develop wind management plans at Disruption Risk Sites where high winds have been identified as a cause, or potential cause, of disruption to the operation of the Unit.

3.2.2 The Operating Company shall ensure that all wind management plans:

(i) are produced in accordance with Transport Scotland's *High Winds Strategy and National Winds Management Guidelines*, and

(ii) take account of other relevant Operational Partners' wind management strategies.

3.2.3 Each wind management plan shall contain the arrangements for implementing Incident Response Operations and mitigation activities for any wind related Severe Weather event that occurs or is predicted to occur at the Disruption Risk Site.

3.2.4 The Operating Company's expert weather forecasting service for Severe Weather events shall provide real-time wind speed data at all sites subject to a wind management plan. Such data shall be made available to the Director and the Traffic Scotland Operations and Infrastructure Service Contractor.

3.2.5 The Operating Company shall review and update all wind management plans at the same time as undertaking the review and update of the Incident Response Plan as stated in Schedule 7 Part 3 and submit any proposed revisions to the Director for written consent.

3.3 Wind Management Plans for the Principal Crossings

3.3.1 The historical FETA wind management procedures for the Forth Road Bridge are listed in Schedule 5 Part 1.

3.3.2 In addition to the general provisions of this Part, the Operating Company shall produce and develop two wind management plans, one for Network 1 operations no later than 60 days prior to Commencement of Service Date 1 and a second plan for Network 2 operations no later than 60 days prior to the Commencement of Service Date 2. The Operating Company shall submit these wind management plans for the Director's written consent. The wind management plan for Network 2 shall also address all operational windspeed limits for diversionary use of the Forth Road Bridge in emergencies on Queensferry Crossing.

3.3.3 Following receipt of the Director's written consent the Operating Company shall provide a copy of each wind management plan to the Traffic Scotland Operations and Infrastructure Service Contractor no later than 15 days prior to Commencement of Service Date 1 for the version for Network 1 and no later than 15 days prior to Commencement of Service Date 2 for the version for Network 2 operation.

3.3.4 The wind management plans shall take into account as a minimum the following requirements:

(i) procedural aspects for Network 1 developed using the historical FETA wind management procedures for the Forth Road Bridge,

(ii) ensure clear demarcation of responsibilities for action and communication between the Traffic Scotland Operations and Infrastructure Service Contractor, the police and the Operating Company,

(iii) liaison between the Operating Company and the police regarding their attendance at the Principal Crossings to implement traffic measures due to high winds,

(iv) notification of all relevant parties including the media with regard to closures of the Forth Road Bridge and or the Queensferry Crossing, their timing and the reasons for such closures.

(v) procedural aspects for the Queensferry Crossing shall take account of the effect of the Queensferry Crossing wind attenuation barriers on vehicle stability in high winds,

(vi) the outcome of Operating Company reviews, which shall evaluate threshold wind speeds including, as a minimum, consideration of observed effects on traffic, actual gust intensities and local wind acceleration effects due to the topologies surrounding the Principal Crossings and features on the Principal Crossings, in particular, buffeting effects caused by the Queensferry Crossing pylons, and the Forth Road Bridge towers.

(vii) where operational benefits can be derived, wind direction when setting wind speed action thresholds.

3.3.5 During the production of the wind management plans, the Operating Company shall undertake a risk assessment for closing the Forth Road Bridge to vehicles of all types and their diversion onto the Queensferry Crossing. The Operating Company shall also reassess the Forth Road Bridge wind speed closure thresholds for implementation after Commencement of Service Date 2. This risk assessment and threshold reassessment shall be undertaken and submitted to the Director for written consent no later than 30 days before Commencement of Service Date 2.

3.3.6 The Operating Company shall make decisions regarding traffic management measures using wind measurements from road level wind sensors situated on the relevant Structure.

3.3.7 The Operating Company shall develop and use the Queensferry Crossing Structural Health Monitoring System to assist in the analysis and reporting of wind events and effects in accordance with the wind management plan implemented after Commencement of Service Date 2.

3.3.8 Following Commencement of Service Date 2, the Operating Company shall observe the safety of traffic in windy conditions to identify any wind-sensitive stretches of road on the Queensferry Crossing and its approaches. If necessary, temporary localised controls on traffic speed shall be implemented immediately in wind conditions defined by the Operating Company until a permanent solution can be proposed by the Operating Company for the written consent of the Director.

3.3.9 Not later than 180 days after Commencement of Service Date 2 and not later than the first instance of 31st March following Commencement of Service Date 2, the Operating Company shall produce a report on traffic behaviour and safety on the Queensferry Crossing and its approaches in conditions of high winds which shall include credible observations gathered from road users and which shall be used in the further development of the wind management plan. The Operating Company shall submit the updated wind management plan to the Director for written consent.

3.3.10 The Operating Company shall review and update all wind management plans at the same time as undertaking the review and update of the Incident Response Plan as stated in Schedule 7 Part 3 and submit any proposed revisions to the Director for written consent.

3.4 Overhead Ice Hazard Management Procedure – Principal Crossings

3.4.1 The Operating Company shall develop procedures and proportionate responses to manage the safety of road users where the formation of ice on elements above deck level including cables and pylons could lead to the risk of this ice falling onto the bridge deck. Such procedures shall be documented within the Incident Response Plan as stated in Schedule 7 Part 3.

3.5 Flooding Management Plans

3.5.1 Subject to an Order, the Operating Company shall develop flooding management plans at Disruption Risk Sites where flooding has been identified as a cause, or potential cause, of disruption to the operation of the Unit.

3.5.2 Each flooding management plan shall detail arrangements for implementing the Incident Response Operations and mitigation activities for any flooding related Severe Weather event that occurs or is predicted to occur at the Disruption Risk Site.

3.5.3 The Operating Company shall use its expert weather forecasting service for Severe Weather events to assist in the planning and implementation of its programme for inspections and patrols of Disruption Risk Sites where flooding has been identified as a cause of the disruption. Such inspections and patrols shall be undertaken in accordance with the requirements of Schedule 7 Part 1.

3.5.4 The Operating Company shall review and update all flooding management plans at the same time as undertaking the review and update of the Incident Response Plan as stated in Schedule 7 Part 3 and submit any proposed revisions to the Director for consent.

3.6 Landslides Management Plans

3.6.1 The Operating Company shall review and update all landslide management plans at the same time as undertaking the review and update of the Incident Response Plan as stated in Schedule 7 Part 3 and submit any proposed revisions to the Director for consent.

3.6.2 When rainfall events which could initiate landslides are predicted, the Operating Company shall use its expert weather forecasting service to assist in the planning and execution of additional inspections and patrols in areas identified as being prone to landslides.

3.6.3 Subject to an Order, the Operating Company shall develop landslide management plans for new Disruption Risk Sites where landslides have been identified as a cause, or potential cause, of disruption to the operation of the Unit, including those identified in the Transport Scotland's *Landslide Study Report*. The Operating Company shall ensure all landslide management plans take account of other relevant Operational Partners' landslide management strategies.

3.6.4 Each landslide management plan shall detail arrangements for implementing the Operating Company's Incident Response Operations and mitigation activities for any landslide related Severe Weather event that occurs or is predicted to occur at the Disruption Risk Site.

4. INCIDENT RESPONSE OPERATIONS FOR SEVERE WEATHER EVENT

4.1 General

4.1.1 When the Operating Company becomes aware of a Severe Weather event occurring or predicted to occur within the Unit, it shall commence the Incident Response Operations in accordance with the requirements of Schedule 7 Part 3 and implement the arrangements stated in the relevant Severe Weather management plan.

4.1.2 The Operating Company's mitigation activities shall include short and long-term activities aimed at minimising or eliminating the vulnerability and exposure of the Unit and its users to the risks from the types of Severe Weather event detailed in paragraph 3 of this Part. The mitigation activities to be undertaken shall be stated in the relevant Severe Weather management plan. All mitigation activities shall be undertaken in accordance with the Operating Company's Disruption Risk Management Plan, which shall be prepared and maintained by the Operating Company in accordance with the Disruption Risk Manual as stated in Schedule 7 Part 3.

4.2 Post Incident Inspections for the Structures – Response Procedure

4.2.1 The Operating Company shall develop a response procedure to inspect parts of the Structures which are identified in the *Forth Road Bridge Engineering Manual* and the *Queensferry Crossing Inspection and Maintenance Manual* relevant to each

Structure as a part of the Severe Weather services plans. This procedure shall be submitted for the written consent of the Director no less than 30 days prior to:

(i) Commencement of Service Date 1 for the Forth Road Bridge, and

(ii) Commencement of Service Date 2 for the Queensferry Crossing.

4.2.2 Both the *Forth Road Bridge Engineering Manual* and the *Queensferry Crossing Inspection and Maintenance Manual* detail the types and locations of inspections that are required following Severe Weather events. Specified parts of the Forth Road Bridge and Queensferry Crossing shall be inspected by Special Inspections after high winds, extreme temperatures lightning strike and other Severe Weather events. For the Forth Road Bridge Special Inspections of all temporary works and the permanent bridge gantries shall be undertaken following high winds events when the gust speeds exceeds 65mph. Special Inspections of the Forth Road Bridge ,all temporary works and permanent bridge gantries shall be undertaken when the wind speeds exceed 80mph. Such inspections shall be carried out from the underdeck walkways, the bridge deck and the tower tops.

4.2.3 Areas requiring inspection prior to reopening to traffic shall be explicitly identified in the response procedure produced by the Operating Company.

4.2.4 The response procedure shall be reviewed by the Operating Company after every event giving rise to its use and any proposed to changes to the same shall be submitted to the Director for his prior written consent.

4.3 Records

4.3.1 All information required by the Operating Company to deliver the requirements of this Part shall be collected and stored in accordance with the requirements stated in Schedule 7 Part 3 and Schedule 5 Part 2.

signed for and on behalf of The Scottish Ministers

by ……...Roy Brannen…….

on …..…… December 2014……

at ……Glasgow……...……

…….……
Authorised Signatory

signed for and on behalf of AMEY LG Limited

by
……...……

on ……..… December 2014……

at ……Glasgow……..….

……..…
Director/Company Secretary/
Authorised Signatory*

SCOTTISH MINISTERS' REQUIREMENTS

SCHEDULE 8 PART 1

ABNORMAL INDIVISIBLE LOAD ROUTEING

CONTENTS **Page No.**

1.	**INTRODUCTION**	**1**
1.1	General	1
2.	**LOAD ROUTEING AND CO-ORDINATION**	**2**
2.1	Load Routeing and Co-ordination	2
2.2	Special Constraints for Crossing the Forth Road Bridge	3
2.3	Special Constraints for Crossing the Queensferry Crossing	3
3.	**ROUTE ASSESSMENT**	**4**
3.1	Management and Records	4
3.2	Roads and Structures	4
3.3	High Loads	5
3.4	Electronic Service Delivery for Abnormal Loads	5
4.	**INDEMNIFICATION**	**5**
ANNEX 8.1/A – A Guide to Notification and Authorisation		**7**
ANNEX 8.1/B – The Association of Chief Police Officers in Scotland – Notification to Hauliers		**12**

SCOTTISH MINISTERS' REQUIREMENTS

SCHEDULE 8 PART 1

ABNORMAL INDIVISIBLE LOAD ROUTEING

1. INTRODUCTION

1.1 General

1.1.1 Movement of abnormal indivisible loads and abnormal vehicles is regulated and controlled by:

(i) *The Road Vehicles (Construction and Use) Regulations 1986* (SI 1986 No 1078),

(ii) *The Road Vehicles (Authorised Weight) Regulations 1998* (SI 1998 No 3111),

(iii) *The Road Vehicles (Authorisation of Special Types) General Order 2003* (SI 2003 No 1998) hereinafter referred to as Special Types General Order 2003, and

(iv) Section 44 of the *Road Traffic Act 1988*.

1.1.2 The Operating Company shall, on behalf of the Director, act as the main contact for all communication and correspondence relating to the routeing and movement of abnormal indivisible loads within the Unit.

1.1.3 Movement of certain abnormal indivisible loads requires authorisation from the Department for Transport. Hauliers and companies are required to obtain authorisation for movements of abnormal indivisible loads with dimensions or weights as described in parts B and C of Annex 8.1/A of this Part.

Hauliers and companies moving abnormal indivisible loads are required to give notice to the police and all road and bridge authorities who have responsibility for the proposed route in accordance with the timescales specified in parts B and C of Annex 8.1/A of this Part.

1.1.4 The Operating Company shall inform and make recommendations to the Director regarding all proposed and agreed movements of abnormal indivisible loads within the Unit within the timescale specified within Annex 8.1/A of this Part. This timescale is required in order to allow authorisation where relevant by the Department for Transport on behalf of the Director.

1.1.5 The Director will issue a copy of the notifications and authorisation to the Operating Company. The Operating Company shall immediately check all notifications and authorisations issued and no later than five Working Days after checking, bring any discrepancies to the attention of the appropriate organisation.

1.1.6 Movement of certain loads, as stated in parts B and C of Annex 8.1/A of this Part, requires an escort. Hauliers are permitted to undertake the self escorting of abnormal indivisible loads and abnormal vehicles within certain limits as stated in parts B and C of Annex 8.1/A of this Part. The Operating Company shall inform all hauliers and companies intending to undertake the self escorting of abnormal indivisible load of the need to comply with Highways Agency publication Code of Practice – *Self-Escorting*

of Abnormal Loads and Abnormal Vehicles. The Operating Company shall comply with this guidance when executing any Operations that may involve self escorting of abnormal indivisible loads and abnormal vehicles.

1.1.7 Police Scotland has published a notice to all hauliers wishing to self-escort any abnormal indivisible loads on roads in Scotland. A copy of such notice is contained in Annex 8.1/B of this Part. The Operating Company shall bring this notice to the attention of all hauliers and companies seeking the routeing and movement of abnormal indivisible loads within the Unit.

1.1.8 The Operating Company shall develop, implement and maintain documented procedures for the effective management of abnormal indivisible load routeing within the Management System, including the Quality Plan.

The Operating Company's Abnormal Load Routeing Manager shall supervise and co-ordinate the duties to be undertaken by the Operating Company specified in this Part.

2. LOAD ROUTEING AND CO-ORDINATION

2.1 Load Routeing and Co-ordination

2.1.1 The Scottish Ministers have a duty to provide a statutory abnormal indivisible load routeing and coordination service throughout Scotland to hauliers and companies on behalf of the Department of Transport. The Operating Company shall provide advice on the routeing of abnormal indivisible loads to the Director, and on behalf of the Director, when required.

2.1.2 The Operating Company shall provide a routeing and coordination service for hauliers and industry for abnormal indivisible loads movements that take place on the Trunk Roads within the Unit.

The Operating Company shall liaise with the relevant Operational Partners and other concerned organisations as required, in order to advise on or identify a suitable route for the movement of abnormal indivisible loads and abnormal vehicles.

2.1.3 When any such movement requires statutory authorisation, the Operating Company shall advise the haulier or company accordingly. No later than three Working Days after advising the haulier or company of the need for statutory authorisation, the Operating Company shall seek prior authorisation from the Director and shall follow the procedures required by paragraph 2.3 of this Part. The Operating Company shall include the application or enquiry received from the haulier or company, together with a suggested abnormal indivisible load route.

2.1.4 The Operating Company shall identify suitable roadside stopping areas in both directions for temporary parking of abnormal indivisible loads prior to such abnormal indivisible loads crossing the Queensferry Crossing and shall propose their use to the Director in writing for his consent no later than 120 days prior to Commencement of Service Date 2.

2.1.5 Any advice that the Operating Company gives to hauliers or companies shall be based on such Records as the Operating Company may possess or to which the Operating Company has access. The Operating Company shall inform hauliers and companies that by advising or commenting on a proposed abnormal indivisible load route:

(i) neither the Operating Company nor the Director assume responsibility of any kind in connection with the movement of the relevant abnormal indivisible load or abnormal vehicle, and

(ii) in following any advice provided, the owner and the operator of the vehicle shall not be relieved of any of obligations or liabilities under the relevant Legislation.

2.2 Special Constraints for Crossing the Forth Road Bridge

2.2.1 The requirements for abnormal indivisible load notification for the Unit as a whole are given in Annex 8.1/A of this Part.

2.2.2 In the course of producing its own procedures for the management of abnormal indivisible load routeing, the Operating Company's Mobilisation Manager and Abnormal Load Routeing Manager shall review the historical procedures used by FETA for abnormal indivisible loads crossing the Forth Road Bridge as referred to in Annex 5.1/B of Schedule 5 Part 1. The advance notification requirements within these procedures shall be brought into line with the procedures stated in Annex 8.1/A of this Part. Such review and updating shall be completed no later than 90 days prior to Commencement of Service Date 1. The proposed procedures and or any revisions to the same shall be submitted to the Director for his written consent.

2.2.3 Until the Operating Company's new procedures have received the Director's consent, for abnormal indivisible loads needing to cross the Forth Road Bridge, the historical FETA procedures *PO 009 "Vehicle Load Restrictions, Notification and Indemnity" and PO 010 "Movement of Abnormal Loads"* shall be followed. These are referred to in Schedule 5 Part 1 Annex 5.1/B.

2.2.4 The Operating Company shall route abnormal indivisible loads over the Queensferry Crossing after it opens on Commencement of Service Date 2. In any circumstances where the Operating Company believes that an abnormal indivisible load needs to cross the Forth Road Bridge after Commencement of Service Date 2, such abnormal indivisible load shall require special prior authorisation by the Director and the Operating Company shall follow the procedures required by paragraph 2.3.

2.3 Special Constraints for Crossing the Queensferry Crossing

2.3.1 The Operating Company shall prepare a procedure for abnormal indivisible loads needing to cross the Queensferry Crossing which complies with the requirements for abnormal indivisible load notification given in Annex 8.1/A and section 3 of this Part. The completed procedure shall be submitted to the Director for consent no later than 120 days prior to the Commencement of Service Date 2.

2.3.2 The Operating Company shall use the Queensferry Crossing weigh-in-motion system, which is a part of the Structural Health Monitoring system, to check the gross weights and axle loads of a representative ten per cent sample of all abnormal indivisible load transits with a gross vehicle weight greater than 80 tonnes to verify that the weights given in the hauliers' submissions are within acceptable limits. The results of these checks shall be submitted in the form of reports to the Director on a bi-annual basis, commencing six months after Commencement of Service Date 2. Where a vehicle is reported by the system to be overweight by more than ten per cent, a notification to the Director shall be made no later than five Working Days after the transit.

3. ROUTE ASSESSMENT

3.1 Management and Records

3.1.1 The Operating Company shall use the structures management function of the Integrated Roads Information System, as referred to in Schedule 7 Part 6, and follow the procedures set out in the structures management function of the Integrated Roads Information System user manual to identify Structures that may be affected by the movement of an abnormal indivisible load.

3.1.2 The Operating Company shall update the data held within the structures management function of the Integrated Roads Information System in accordance with the requirements of Schedule 7 Part 6.

3.1.3 In undertaking a route assessment, the Operating Company shall take account of the guidance contained in the structures management function of the Integrated Roads Information System and the Operating Company's abnormal indivisible load routeing procedures for the Principal Crossings developed in sections 2.2 and 2.3 of this Part on the effects of heavy load movements across over-bridges, under-bridges and Structures within the Unit. The Operating Company shall record in the structures management function of the Integrated Roads Information System, data on the vehicles used in the movement of abnormal indivisible loads.

3.1.4 The Operating Company shall keep Records of the assessment of abnormal vehicle movements and the approved abnormal indivisible load route for each abnormal indivisible load. The Operating Company is advised that, whilst the findings of a given assessment and the vehicles checked along an approved abnormal indivisible load route are retained within the structures management function of the Integrated Roads Information System, the route is not.

3.2 Roads and Structures

3.2.1 In accordance with paragraph 2.1 and Annex 8.1/A of this Part, the Operating Company shall assess the proposed movement of vehicles with heavy, wide, long or high abnormal indivisible loads to determine the suitability of Structures and Trunk Roads within the Unit to accommodate such vehicles.

3.2.2 The Operating Company shall examine the Records available in the structures management function of the Integrated Roads Information System or other such documents or databases available to the Operating Company. The records in the structures management function of the Integrated Roads Information System provide an HB rating for the Structure and record what abnormal loads have previously crossed the Structure and as such provide the Operating Company with a basis on which to commence its assessment of the proposed movement.

3.2.3 The Operating Company shall not carry out structural assessments as part of its duties under this Part. When it is identified that a Structure may require further structural assessment to establish its capability to carry the proposed load, the Operating Company shall bring this to the immediate attention of the Director. The use of specialist tools for the assessment of custom defined vehicle configurations shall be made only with the written consent of the Director. The Operating Company shall submit a request for the use of such tools to the Director no later than 120 days prior to the respective commencement of service date for the Structure in question.

3.2.4 Subject to the haulier or company reaching agreement with the Director on a further structural assessment, the Operating Company shall provide assistance to the haulier or company or its agent by giving access to relevant Drawings, calculations and other appropriate Records held by the Operating Company.

3.3 High Loads

3.3.1 The Operating Company shall provide advice to the Director, hauliers and the industry on the passage of high loads. In order that the maximum possible use is made of the Trunk Road network, except where signed height restrictions are in force, the overall laden height of a vehicle should not exceed 4.95 metres (16'3").

3.3.2 No later than 28 days before Commencement of Service Date 1, the Director will provide to the Operating Company a grid of high load routes within Scotland. These high load routes shall be for load heights up to 5.48 metres (18ft), with further information provided on routes that can accommodate 6.09 metres (20ft) high loads.

3.3.3 The Operating Company shall immediately notify the Director of any changes that need to be made to the abnormal load pinch point grid of high load routes.

3.3.4 The Operating Company shall ensure that no activity for which it is responsible reduces the existing height clearances available on Trunk Roads within the Unit unless consented to in writing by the Director.

3.4 Electronic Service Delivery for Abnormal Loads

3.4.1 During Service Period 1 or Service Period 2, the Director may introduce a new system, known as the electronic service delivery for abnormal loads.

3.4.2 When the system for electronic service delivery for abnormal loads is introduced, the Operating Company shall be required to:

(i) implement the use of this system through documented procedures contained within the Management System,

(ii) use this system until the Service End Date,

(iii) update data used in indicative capacity appraisals to identify potential problem Structures, and

(iv) add information to the system about any constraints that may impact on an abnormal indivisible load route.

4. INDEMNIFICATION

4.1.1 The Operating Company shall, on behalf of the Director, request indemnification, in the format specified in the Specification of the Special Types General Order 2003, from any haulier or company whose abnormal indivisible loads are expected to travel within the Unit.

4.1.2 The Operating Company shall immediately notify the Director if it has not received any requested indemnity in advance of any movement of abnormal indivisible loads.

4.1.3 The Operating Company shall keep the indemnity forms received at its Central Office and shall prepare and maintain a list of hauliers and companies for whom indemnity forms are held. Indemnity forms shall be kept for a minimum period of 12 months after the indemnified movement has taken place. Should the 12 month period extend

beyond the Termination Date, any indemnity forms held by the Operating Company shall be passed to any incoming operating company.

This is Annex 8.1/A to Schedule 8 Part 1 referred to in the foregoing Agreement between Scottish Ministers and Amey LG Limited.

SCOTTISH MINISTERS' REQUIREMENTS

SCHEDULE 8 PART 1

ABNORMAL INDIVISIBLE LOAD ROUTEING

ANNEX 8.1/A – A Guide to Notification and Authorisation

SCOTTISH MINISTERS' REQUIREMENTS

SCHEDULE 8 PART 1

ABNORMAL INDIVISIBLE LOAD ROUTEING

ANNEX 8.1/A – A Guide to Notification and Authorisation of Abnormal Indivisible Load Movements

The following is a guide to notification and authorisation requirements for the movement of abnormal indivisible loads:

A. Dimensions within "Construction & Use Regulations"

Laden dimensions **not** exceeding:

2.90m (9'6") overall width, 18.75m (61'6") rigid length, or Gross weight or axle weight up to limits set out in *The Road Vehicles (Construction and Use) Regulations 1986* or *The Road Vehicles (Authorised Weight) Regulations 1998*	No requirement for notice to Transport Scotland, the police or for notice with indemnity to road & bridge authorities

The Secretary of State's authorisation is not required for the movement of abnormal indivisible loads with laden dimensions as stated above.

B. Dimensions within "Special Types General Order"

Laden dimensions in excess of "Construction & Use Regulations" but **not** exceeding:

6.1m (20'0") overall width *	2 Clear Working Days notice to police

* Secretary of State "VR1" authorisation is required for the movement of abnormal indivisible loads **with an overall width in excess of 5.0m (16'5") but not exceeding 6.1m (20'0"). The VR1 authorisation requires 10 days notice to the Highways Agency in addition to the timeframe stated above.**

30.0m (98'4") rigid length	2 Clear Working Days notice to police
80,000kgs (80t) gross weight	2 Clear Working Days notice with indemnity to road & bridge authorities
over 80,000kgs (80t) but not exceeding 150,000kgs (150t) gross weight	5 Clear Working Days notice with indemnity to road & bridge authorities **and** 2 Clear Working Days notice to police

C. Dimensions requiring Special Order

Laden dimensions exceeding:

6.1m (20'0") overall width**	5 Clear Working Days notice with indemnity to road & bridge authorities **and** 5 Clear Working Days notice to police

** Secretary of State "HA form BE 16" authorisation is required for the movement of loads **with an overall width in excess of 6.1m (20'0"). The BE16 authorisation requires 8 weeks notice to the Highways Agency in addition to the timeframes outlined above**

30.0m (98'4") rigid length***	5 Clear Working Days notice with indemnity, to road & bridge authorities, **and** 5 Clear Working Days notice to police

*** Secretary of State "HA form BE 16" authorisation is required for the movement of loads **with an overall length in excess of 30.0m (98'5"). The BE16 authorisation requires 8 weeks notice to the Highways Agency in addition to the timeframes outlined above**

150,000kgs (150t) gross weight and/or 16,500kgs (16.5t) per axle****	5 Clear Working Days notice with indemnity, to road & bridge authorities, **and** 5 Clear Working Days notice to police

**** Secretary of State "HA form BE 16" authorisation is required for the movement of loads **with an overall weight exceeding 150,000kgs (150t) and/or 16,500kgs (16.5t) per axle. The BE16 authorisation requires 8 weeks notice to the Highways Agency in addition to the timeframes outlined above**

Secretary of State's "Special Order" authorisation is required for the movement of abnormal indivisible loads with laden dimensions as stated above.

NOTES

1. There is no Legislation governing the overall laden height of a vehicle but in order that the maximum possible use is made of the motorway and Trunk Road network the overall laden height should not exceed 4.95m (16'3").

2. "Clear Working Days notice" excludes Saturdays, Sundays, bank holidays or public holidays.

3. The Transport Scotland Bridges Section offers an advisory service to the operating companies on the routeing of abnormal indivisible loads on the Trunk Road network, including those loads within the laden dimensions stated in Part A of this Annex which do not require the Secretary of State's authorisation or notification to Transport Scotland.

This is Annex 8.1/B to Schedule 8 Part 1 referred to in the foregoing Agreement between Scottish Ministers and Amey LG Limited.

SCOTTISH MINISTERS' REQUIREMENTS

SCHEDULE 8 PART 1

ABNORMAL INDIVISIBLE LOAD ROUTEING

ANNEX 8.1/B – The Association of Chief Police Officers in Scotland – Notification to Hauliers

SCOTTISH MINISTERS' REQUIREMENTS

SCHEDULE 8 PART 1

ABNORMAL INDIVISIBLE LOAD ROUTEING

ANNEX 8.1/B – The Association of Chief Police Officers in Scotland – Notification to Hauliers

ACPOS
ASSOCIATION OF CHIEF POLICE OFFICERS IN SCOTLAND

NOTICE TO HAULIERS

ACPOS ABNORMAL LOADS WORKING GROUP

ACPOS Road Policing Standing Committee have endorsed the principle of self escorting abnormal indivisible loads on motorways and linking dual carriageways and on other roads deemed suitable by individual Chief Constables.

The self escorting of abnormal indivisible loads is acceptable only in the following circumstances:

(i) The Haulier complying with the Department for Transport/Highways Agency Code of Practice,

(ii) The Haulier must give written notice at the time of notification that the self escort personnel will not engage in the direction or control of traffic, and

(iii) The Haulier must give an assurance that they will not operate or move abnormal indivisible loads on urban motorways during peak traffic flows.

ROAD SAFETY UNDERPINS THE POLICY RELATIVE TO SELF ESCORTING. HAULIERS MUST ENSURE THAT THE SAFETY OF ALL ROAD USERS IS AT THE FOREFRONT OF SELF ESCORTING ACTIVITIES.

The draft code of conduct refers to Level 2 accredited persons. Level 2 accredited persons will not apply in Scotland. Chief Officers in England and Wales do not intend to accredit any individuals to Level 2 as referred to in the DfT Highways Agency Code of Practice.

The police service in Scotland are not forcing any haulier to self escort. Self escorting is an option available to all the hauliers using motorways and the linking dual carriageway network in Scotland. The savings in time will no doubt make self escorting very attractive to Hauliers. As a result of the "no escort" policy being adopted by the police service in England and Wales from 1 January 2004, many private companies have been set up as providers of abnormal load escorts. Such companies are in the process of contacting individual police forces seeking some form of endorsement for their company. Scottish Forces will not enter into any form of agreement with private abnormal load escort companies. The relevant legislation refers to the haulier and no provision is made for any agent or other person acting on behalf of the haulier. The onus relative to notification and indemnity rests with the haulier and with no other person.

The Association of Chief Police Officers in Scotland Road Policing Standing Committee are not requiring Hauliers to be members of any organisations or trade associations before they can operate self escorting.

It is essential that all Hauliers have insurance cover for the task of self escorting.

The onus for route planning and notification to both the Police and Roads Authorities remains with the Haulier.

Should any further information relative to the policy be required, contact should be made with the undersigned during normal office hours.

Inspector Simon Bradshaw
Road Policing Management Support
Police Scotland
Fife Div HQ
Detroit Road
Glenrothes
KY6 2RJ

E-mail: simon.bradshaw@scotland.pnn.police.uk

Tel: 01592 418828

SCOTTISH MINISTERS' REQUIREMENTS

SCHEDULE 8 PART 2

DEVELOPMENT MANAGEMENT

CONTENTS **Page No.**

1.	**PLANNING APPLICATIONS**	**1**
1.1	Consultation with the Scottish Ministers	1
1.2	Notice to Consider	1
1.3	Assistance with Response	1
1.4	System for Processing Planning Applications	1
1.5	Transportation Assessments	3
1.6	Local Planning Public Inquiries and Local Development Plans	4
1.7	Pre-Application Advice	4
2.	**WORKS WITHIN THE TRUNK ROAD**	**4**
2.1	Requirements	4
2.2	Minute or Letter of Agreement	5
3.	**TRADING WITHIN THE TRUNK ROAD BOUNDARY**	**5**

SCOTTISH MINISTERS' REQUIREMENTS

SCHEDULE 8 PART 2

DEVELOPMENT MANAGEMENT

1. PLANNING APPLICATIONS

1.1 Consultation with the Scottish Ministers

1.1.1 Planning authorities are required to consult with the Scottish Ministers under regulation 25 and any direction given under regulation 30 and Schedule 5 paragraph 5 of the *Town and Country Planning (Development Management Procedure) (Scotland) Regulations 2013* before determining an application for planning permission for a development.

1.1.2 An electronic planning system has been introduced nationally for planning in Scotland with applications being logged via an online portal. Transport Scotland has developed a parallel electronic online system to record, review, respond and monitor all planning applications. This system is the development management function of the Integrated Roads Information System.

1.2 Notice to Consider

1.2.1 The planning authority is required to give the Scottish Ministers not less than 14 days' notice of its intention to consider and determine a planning application.

1.3 Assistance with Response

1.3.1 The Operating Company shall appoint a Planning Application Officer in accordance with the requirements of Schedule 5 Part 4 who shall assist the Director in responding to planning authorities on any planning application.

1.4 System for Processing Planning Applications

1.4.1 The Operating Company shall comply with the development management function of the Integrated Roads Information System for processing planning applications described in paragraph 1.4.2 of this Part.

1.4.2 The procedure for processing of planning applications is:

(i) the Operating Company shall use the development management function of the Integrated Roads Information System to complete its responses online within five Working Days of receipt of all documentation relating to the planning application, for the Director's consideration,

(ii) planning applications, including details and enclosures (such as plans), are uploaded by the planning authority onto the national online planning system on the planning authorities' web pages and an electronic notification is issued to the Director and the Operating Company,

(iii) the development management function of the Integrated Roads Information System will prompt the Operating Company to complete its relevant actions in the required timescale in order to assist in the process of responding to the planning application, and

(iv) the Operating Company shall inform the Director immediately, via email, if the applicant for planning permission has any connection with the Operating Company or any of its members or associates, including:

(a) sub-consultants,

(b) contractors,

(c) sub-contractors, and

(d) any parent company or local authority partner of the Operating Company,

which might cause a conflict of interest.

The Director will inform the Operating Company, via email, should he consider it inappropriate for the Operating Company to consider the planning application further. The Director will then appoint others to deal with such applications,

(v) the Director will ensure that the planning authority has provided all the information required to allow the planning application to be properly assessed. Should the Operating Company identify that incorrect or insufficient information is provided such that the Operating Company cannot process the application, the Operating Company shall highlight this via the development management function of the Integrated Roads Information System.

The development management function of the Integrated Roads Information System will then generate a request to the planning authority to supply the required information as soon as possible. The development management function of the Integrated Roads Information System will also indicate that all the information is not available to the Operating Company. The time for the Operating Company to make the response shall be extended automatically by the development management function of the Integrated Roads Information System until all the required information is available,

(vi) the development management function of the Integrated Roads Information System will reference applications geographically in order that they can be displayed on a digital map to which the Director and the Performance Audit Group have access at all times.

Where historical information is available, the Operating Company shall use this information to advise the Director of any previous planning applications in the vicinity of any new planning application. The Operating Company shall take into account any advice relating to historical planning applications that is relevant to the vicinity of the new planning application.

Where historical information on planning applications is not held by the Operating Company, the Director will arrange for any available information to be passed to the Operating Company as an Electronic Copy and the Operating Company shall upload the information to the development management function of the Integrated Roads Information System, and

(vii) the Operating Company shall inspect the Trunk Road in the vicinity of the location relevant to any planning application and consider any potential implications.

The Operating Company shall submit an inspection report, via the development management function of the Integrated Roads Information System, to the Director which shall include relevant details such as:

(a) visibility,

(b) traffic flow,

(c) accident record, as recorded on the Director's accident database,

(d) speed limit, and

(e) any other relevant considerations.

The Operating Company shall make comments and recommendations on the application to the Director, via the development management function of the Integrated Roads Information System, taking into account all the details available from the inspection and Records.

The Operating Company's recommendations to the Director will adopt, where appropriate, the standard planning consultation responses referred to in Scottish Executive Circular 4/1998 – *The Use of Conditions in Planning Permissions*,

(viii) on receipt of the planning application, the Operating Company shall review the Equality Act database and advise the Director of any barriers to accessibility in the vicinity of the planning application via the development management function of the Integrated Roads Information System,

(ix) the Operating Company shall provide photographs taken in the vicinity of the site of the planning application. The photographs shall be taken in a sufficiently competent manner and be of sufficient scope and quality to assist the Director in coming to a recommendation. Particular attention shall be given to the quality of the photographs provided during the winter months when the daylight hours are restricted.

The Operating Company shall upload the photographs in the correct file size and format specified by the development management function of the Integrated Roads Information System.

1.4.3 The advice to the planning authority on each planning application shall be issued by the Director via the development management function of the Integrated Roads Information System and will take into account the comments and recommendations of the Operating Company. The advice given by the Director to the planning authority will be available to the Operating Company via the development management function of the Integrated Roads Information System.

1.5 Transportation Assessments

1.5.1 The Operating Company shall notify the Director, via the development management function of the Integrated Roads Information System, within one Working Day of receipt of any planning applications which require a transportation appraisal or assessment, as referred to in the *Development Planning and Management Transport Appraisal Guidance* published by Transport Scotland.

The audit of a transportation appraisal or assessment submitted by the developer will usually be carried out on behalf of the Director by the Development Management Branch of the Trunk Road and Bus Operations.

The Director will manage such planning applications but the Operating Company shall be required to complete the necessary responses and comments and take the necessary photographs in accordance with paragraph 1.4.2 of this Part.

1.6 Local Planning Public Inquiries and Local Development Plans

1.6.1 From time to time, planning applications may result in local planning public inquiries being held. Assistance for these will normally be provided by term consultants directly employed by the Director. However, where assistance is required from the Operating Company, this shall be subject to an Order.

Similar arrangements shall be followed regarding assistance for consultation on local development plans.

1.7 Pre-Application Advice

1.7.1 Pre-applications will be registered on the development management function of the Integrated Roads Information System and when prompted to do so by the Director, the Operating Company shall provide information or advice in relation to them.

1.7.2 Where the Operating Company is asked to provide information or advice on pre-applications, the Operating Company's response to the applicant shall be recorded on the development management function of the Integrated Roads Information System. Where site measurements or checks are required in response to a pre-application, the Director will notify the Operating Company via email and the Operating Company shall record the relevant measurement or check information.

1.7.3 At no time shall the Operating Company confirm that a proposal is acceptable to an applicant or its agent, although it may acknowledge the suitability or otherwise of any technical standards. Its response to the applicant shall be referred back to the Director via the development management function of the Integrated Roads Information System to be qualified as appropriate.

2. WORKS WITHIN THE TRUNK ROAD

2.1 Requirements

2.1.1 The Director's advice on the development management function of the Integrated Roads Information System allows:

(i) for the inclusion of advice that any planning consent does not carry with it the right to carry out works within a Trunk Road, and

(ii) that the applicant will consult the Operating Company on terms and conditions under roads Legislation, to be agreed between the developer and the Director, before approval is given to the developer to undertake works within a Trunk Road.

2.1.2 Whether planning consent is required or not, where a developer requires to execute work on a Trunk Road, the developer is required to liaise with the Director (and copy to the Operating Company), to obtain authorisation for such works before their commencement. Subject to an Order, the Operating Company shall check the developer's proposals and authorise works if acceptable.

2.1.3 Before authorisation is given to a developer to carry out work within a Trunk Road, the Operating Company shall ensure that any plans and detailed proposals of the work have been submitted in sufficient detail for it to satisfy itself that all terms and conditions relating to the design, construction and temporary traffic management of

the work and legislative requirements of the *Equality Act 2010 (Amendment) Regulations 2012* have been complied with to allow it to authorise such works.

2.1.4 The Operating Company shall undertake whatever inspections and site supervision are necessary to ensure that:

(i) the work does not cause unnecessary inconvenience to all categories of road user, including motorists, pedestrians, cyclists, motorcyclists and equestrians,

(ii) the work undertaken meets the required standards of design, construction and temporary traffic management, and

(iii) the work is constructed in accordance with the planning consent.

2.1.5 The Operating Company shall update the network referencing when appropriate in accordance with the requirements of Schedule 4 Part 2.

2.1.6 The Operating Company's duties, responsibilities and powers, as referred to in paragraphs 2.1.1 to 2.1.5 of this Part, are contained in the relevant sections of the *Roads (Scotland) Act 1984* and are Statutory Functions delegated to the Operating Company under this Contract.

2.1.7 The Operating Company shall advise the Director via the development management function of the Integrated Roads Information System in the event of any failure by a developer to comply with the terms and conditions imposed in relation to its work as referred to in this Part.

2.2 Minute or Letter of Agreement

2.2.1 For certain work on a Trunk Road required as a result of a planning application, developers may be required by the Director to enter into a minute or letter of agreement with the Scottish Ministers which specifies conditions relating to approvals and consents for any such work and for adoption of the completed work.

2.2.2 Subject to an Order, the Operating Company shall assist the Director in drawing up and administering such minutes or letters of agreement, including providing technical and programming advice on the proposals.

3. TRADING WITHIN THE TRUNK ROAD BOUNDARY

3.1.1 During each Annual Period, the Operating Company shall check at intervals not exceeding six months, that anyone trading from a lay-by on a Trunk Road within the Unit, or any other location that is within 15 metres of such Trunk Road, has a permit issued by Transport Scotland granting permission to trade at that location, and that they are abiding by all conditions pertaining to that permission.

If the Operating Company finds that a person is trading from a Trunk Road lay-by without the permission of Transport Scotland or that the permission letter is not clearly displayed, the Operating Company shall notify its Planning Application Officer immediately. The Planning Application Officer shall inform the Director within five Working Days of such notification and agree actions to be executed by the Operating Company.

SCOTTISH MINISTERS' REQUIREMENTS

SCHEDULE 8 PART 3

ROAD SAFETY AND ACCIDENT INVESTIGATION AND PREVENTION

CONTENTS **Page No.**

1.	**GENERAL**	**1**
1.1	Introduction	1
2.	**ROUTE SAFETY FILES**	**1**
3.	**OPERATING COMPANY'S ANNUAL ROAD SAFETY REVIEW**	**2**
4.	**ACCIDENT INVESTIGATION AND PREVENTION**	**3**
5.	**DETAIL DESIGN AND CONSTRUCTION OF ROAD SAFETY SCHEMES**	**3**
ANNEX 8.3/A – Example Route Safety File Contents		**5**
ANNEX 8.3/B – Project Plan Template		**9**

SCOTTISH MINISTERS' REQUIREMENTS

SCHEDULE 8 PART 3

ROAD SAFETY AND ACCIDENT INVESTIGATION AND PREVENTION

1. GENERAL

1.1 Introduction

1.1.1 The Operating Company shall support the Director in delivering the Scottish Government's *Scotland's Road Safety Framework to 2020* and also Transport Scotland's *Strategic Road Safety Plan 2007.* In undertaking its obligations in relation to this Part, the Operating Company shall liaise closely and cooperate with the Director and other stakeholders, including as a minimum local authorities, Emergency Services and safety camera partnerships.

1.1.2 The Operating Company shall appoint a Road Safety Manager in accordance with the requirements of Schedule 5 Part 4 who shall be responsible for the management of all road safety and accident investigation and prevention matters.

2. ROUTE SAFETY FILES

2.1.1 The Director will provide Route Safety Files prepared by any previous operating company for any part of the Unit and or historic route safety data, to the Operating Company no later than 30 days prior to Commencement of Service Date 1.

2.1.2 The Operating Company shall open Route Safety Files for the Unit (using as a basis the template for a Route Safety File provided as Annex 8.3/A of this Part) to provide a knowledge base to inform prioritisation of accident investigation and prevention work.

2.1.3 The Operating Company shall use Route Safety Files to:

(i) inform future road safety strategies,

(ii) enable each route within the Unit to be considered against the performance of other routes within the Unit, and

(iii) allow road safety targets to be set for that route.

2.1.4 The Operating Company shall continually update and maintain such Route Safety Files including, as a minimum, updating of the same no later than 30 days prior to Commencement of Service Date 2 to include route safety data for Network 2.

2.1.5 The Operating Company shall provide fully updated Route Safety Files to the Director annually on 15 November for the Director's consent and shall immediately, after receiving any amendments which the Director deems necessary, amend and resubmit the same for the Director's consent.

2.1.6 Subject to an Order, the Road Safety Manager shall assist the Director in the continuing development and arrangement of Route Safety Groups to consider the performance of individual routes and encourage:

(i) increased safety and more innovation,

(ii) development of joint road safety initiatives nationally and in the local area, and

(iii) a proactive approach to safety engineering.

The Road Safety Manager shall organise a Route Safety Group meeting in each Annual Period, for each route, at which the relevant Route Safety File shall be presented to stakeholders for discussion.

3. OPERATING COMPANY'S ANNUAL ROAD SAFETY REVIEW

3.1.1 The Director will provide the Operating Company in June each year with a list of accident cluster sites and higher than national average accident rate sections within the Unit that warrant investigation. The lists will consider accidents in the period 1 January to 31 December in the preceding three years and will include sites or sections investigated or treated previously. The list provided will not be exhaustive and the Operating Company shall develop liaison procedures with the Emergency Services, local authorities and safety camera partnerships to identify and discuss additional sites or sections that may warrant further investigation.

3.1.2 The Operating Company shall investigate the sites and sections listed and provide an Annual Road Safety Review Report to the Director by 15 August. The report shall detail the reasons for selecting, or not selecting, sites and sections for further investigation and shall highlight where sites and sections have already been treated or were previously considered unsuitable for further investigation or treatment.

3.1.3 The Operating Company shall develop from the Annual Road Safety Review Report a programme of road safety initiatives which will deliver:

(i) safer road design,

(ii) improved speed management,

(iii) better provision for vulnerable road users, and

(iv) reduce the frequency and severity of personal injury accidents,

to contribute to achieving the Scottish Governments' casualty reduction targets and shall consider both accident and risk reduction and may include:

(i) accident cluster site treatment,

(ii) route improvements, and

(iii) prioritised Mass Action Programmes to address known accident types that have been evidenced through the lists of accidents or identified within the Route Safety Files.

3.1.4 The Annual Road Safety Review Report shall demonstrate how the sites identified for further investigation will support the Scottish Government in delivering the 2020 casualty reduction targets detailed in the Scottish Government's *Scotland's Road Safety Framework to 2020* and Transport Scotland's *Strategic Road Safety Plan 2007*.

3.1.5 The Annual Road Safety Review Report shall consider the performance of all road safety improvements during the three years after their implementation. This shall include details of before and after accident data (including the first 12 months and 36 months after accident data when it becomes available) and assessments of the relative performance of the different mitigation measures implemented in previous years. This shall include those road safety improvements implemented by the previous operating company.

3.1.6 The Annual Road Safety Review Report shall demonstrate how road safety Schemes from the previous year contribute to the casualty reduction targets set in the Scottish Government's *Scotland's Road Safety Framework to 2020* and Transport Scotland's *Strategic Road Safety Plan 2007* and detail any innovative measures implemented in the previous year.

3.1.7 Based on the findings of the Annual Road Safety Review Report, the Operating Company shall submit to the Director a draft one year programme of Schemes as described in Schedule 4 Part 1.

4. ACCIDENT INVESTIGATION AND PREVENTION

4.1.1 Subject to an Order, the Operating Company shall provide an Accident Investigation and Prevention Report for the Director's consent.

The Operating Company's Accident Investigation and Prevention Report shall set out the findings of the nature and cause of accidents and propose remedial measures to address identified causes of accidents. The proposed measures shall be backed by relevant evidence showing an expected accident reduction factor for that type of mitigation measure. The Operating Company shall also propose risk reduction measures to improve the overall safety performance of the routes. Risk reduction measures shall be qualified with evidence to demonstrate value for money.

The Operating Company shall develop a Route Accident Reduction Plan in discussion and consultation with all affected parties via relevant Route Safety Groups.

4.1.2 The Accident Investigation and Prevention Report shall provide sufficient detail including plans, stick diagrams, tables, additional accident data, accident causation factors, estimated costs, collision reduction factors for mitigation measures and an estimated first year rate of return, in a form which enables the Director to consider and review the proposals. When preparing the Accident Investigation and Prevention Report and, where relevant, the Operating Company shall make arrangements with the appropriate Emergency Services to gain access to plain text information.

The Accident investigation and Prevention Report shall be prefaced by a Project Plan; a template for which is provided at Annex 8.3/B of this Part.

The Operating Company shall submit the Accident Investigation and Prevention Report to the Director within 25 Working Days of receipt of the Order, or within such other timescale as specified by the Director within any such Order.

5. DETAIL DESIGN AND CONSTRUCTION OF ROAD SAFETY SCHEMES

5.1.1 The Director will consider and review the Accident Investigation and Prevention Report. Should the Director decide to proceed with a Scheme, the Director will:

(i) issue an Order to the Operating Company to undertake the detailed Design, or,

(ii) issue an Order to the Operating Company to undertake construction, or

(iii) require the Operating Company to submit draft one year and three year programmes of Schemes as described in Schedule 4 Part 1.

This is Annex 8.3/A to Schedule 8 Part 3 referred to in the foregoing Agreement between Scottish Ministers and Amey LG Limited.

SCOTTISH MINISTERS' REQUIREMENTS

SCHEDULE 8 PART 3

ROAD SAFETY AND ACCIDENT INVESTIGATION AND PREVENTION

ANNEX 8.3/A – Example Route Safety File Contents

SCOTTISH MINISTERS' REQUIREMENTS

SCHEDULE 8 PART 3

ROAD SAFETY AND ACCIDENT INVESTIGATION AND PREVENTION

ANNEX 8.3/A – Example Route Safety File Contents

Preface

Route information

- Description of route
- Character of road
- Key towns/settlements and junctions
- Type of pedestrians that utilise the road
- Type of road
- Capacity issues
- Location of ATC
- Traffic flow (AADF)
- Traffic flows and composition
- Speed limits and safety camera sites
- Road Condition (SCRIM/deflectograph information)
- Structures
- Bend assessment
- Overtaking provisions
- Lay-by provision
- Junction provision
- Junction density
- EuroRAP Rating
- Inspections
- Environmental issues
- Future developments and land issue changes

Accident analysis

- Accident Frequency
- Accident Data
- Accident Rates
- Comparison against Control Data
- Cluster Sites
- Primary Accident Types
- Accident Trends
- 2010 targets performance review
- Road safety performance

Stakeholder Issues

- Contacts
- Correspondence (requests and frequently asked questions)

Schemes

- Strategic Road Safety
- Structural Maintenance
- Minor improvements and major Schemes
- Lighting schemes
- Environmental scheme

Technical Projects and Strategy

- Traffic Signs
- Road / Rail Interfaces
- Speed Limits / Traffic Regulation Orders (TRO's)
- Safety Audit History
- Initiatives
- Demonstration projects
- Police enforcement strategy

This is Annex 8.3/B to Schedule 8 Part 3 referred to in the foregoing Agreement between Scottish Ministers and Amey LG Limited.

SCOTTISH MINISTERS' REQUIREMENTS

SCHEDULE 8 PART 3

ROAD SAFETY AND ACCIDENT INVESTIGATION AND PREVENTION

ANNEX 8.3/B – Project Plan Template

SCOTTISH MINISTERS' REQUIREMENTS

SCHEDULE 8 PART 3

ROAD SAFETY AND ACCIDENT INVESTIGATION AND PREVENTION

ANNEX 8.3/B – Project Plan Template

STRATEGIC ROAD SAFETY
PROJECT PLAN
SCHEME

TRANSPORT SCOTLAND

Scheme ID	Unit	TS Road Safety Officer	Work Type	Scheme Opened

Work Code	TS Area Manger	OC Project Manager	FDD	Date Last Saved

Works Location and Approximate length (Link/Section No's)

Details of the site (description, carriageway conditions)

Scheme Type / Accident Frequency / Accident Rate	Monitoring	Year	Accident Frequency
	Before – 3 Years		
	After – Year 1		
	After – Year 2		
	After – Year 3		
	Before Ave' Annual		
	After Ave' Annual		

Pavement Condition

Identified Accident Causation

Proposed Mitigation Measures (Excluding Pavement Works)

Pavement Works

Economic Analysis

Annual Accident Saving		First Year Rate of Return	

Financial Monitor

Investigation		Design		Construction		Scheme	
Estimated:		Estimate		Estimated		Estimated:	
Actual:		Actual:		Actual:		Actual:	

List of attached information

Agreed Record

AIP Representative		Signature		Date	
SRS Representative		Signature		Date	

SCOTTISH MINISTERS' REQUIREMENTS

SCHEDULE 8 PART 4

SIGNS REQUIRING AUTHORISATION

CONTENTS **Page No.**

1.	**REQUIREMENTS**	**1**
1.1	General	1
1.2	Tourist Signposting	2
1.3	Temporary Traffic Signs to Special Events	3
1.4	Unauthorised Signs	4
1.5	Election Advertisements on Trunk Roads	4
1.6	Truckstop Signposting	5

SCOTTISH MINISTERS' REQUIREMENTS

SCHEDULE 8 PART 4

SIGNS REQUIRING AUTHORISATION

1. REQUIREMENTS

1.1 General

1.1.1 To ensure a consistent national approach, the authorisation of all signs on the Unit will be the responsibility of the Director, except where otherwise expressly stated in this Part as being the responsibility of the Operating Company.

The Operating Company shall provide advice and recommendations to the Director on the suitability or otherwise of all signing proposals and applications which are:

(i) submitted directly to the Operating Company, or

(ii) referred to the Operating Company by the Director.

Such advice and recommendations shall be provided to the Director within 10 Working Days of the Operating Company's receipt of any such proposals and applications.

1.1.2 The Operating Company shall keep an electronic register of all sign proposals and applications received and shall categorise the entries in the register as being related to:

(i) tourist signposting,

(ii) temporary traffic signs to Special Events,

(iii) temporary signing for other purposes (including as a minimum advertising for events),

(iv) permanent signing (including as a minimum Traffic Signs Regulations and General Directions signs and any signs approved by the appropriate planning authority), or

(v) truckstop signposting.

1.1.3 For each proposal and application the electronic register shall contain, as a minimum, the following information for each entry:

(i) the applicant and owner,

(ii) the location of the signs, (including whether on public or private land),

(iii) the decision to consent or reject the application,

(iv) the terms of the agreement, and

(v) all relevant dates.

All Records shall be cross-referenced to the register entry.

1.1.4 No later than 20 days before Commencement of Service Date 1, the Operating Company shall add to the electronic register all incomplete proposals and applications received from the any previous operating company for any part of the Unit and FETA. The Operating Company shall progress any incomplete proposals

and applications in accordance with the requirements of this Part as if the proposal had been made directly to the Operating Company.

1.1.5 The Operating Company shall provide the Director and Performance Audit Group with direct remote access to the electronic register and Records referred to in this Part at all times. Each entry in the register shall include the relevant Ordnance Survey grid reference to at least 12 figures.

1.1.6 The Operating Company shall designate an officer to deal with each proposal and application in the register, including all correspondence associated with each proposal or application.

1.2 Tourist Signposting

1.2.1 The Operating Company shall comply with the Director's policy on tourist signposting in Transport Scotland's *Trunk Road and Motorway Tourist Signposting Policy and Guidance*.

1.2.2 The Operating Company shall undertake the duties identified in Transport Scotland's *Trunk Road and Motorway Tourist Signposting Policy and Guidance* and associated documentation, including as a minimum and or in addition:

(i) acting as Home Traffic Authority (as defined in Transport Scotland's *Trunk Road and Motorway Tourist Signposting Policy and Guidance*) where access is direct from a Trunk Road,

(ii) providing full advice on each application under the following headings:

(a) road safety aspects of proposed signing such as visibility, protection measures, post type etc,

(b) whether it is practical for additional tourist signing to be provided,

(c) sign clutter and environmental impact of proposed signing,

(d) size of lettering on the signs and acceptable legend,

(e) number and location of signs,

(f) continuity signing on the local road network,

(g) brown tourist signage ,

(h) clarity of route to identify means of access back to the Trunk Roadfrom the event and or attraction, and

(i) other advice as necessary,

(iii) considering the relevant local authority's tourist signposting policy and ensuring that the Operating Company complies with this, when making recommendations to the Director on applications,

(iv) communicating and liaising with VisitScotland to confirm that tourist operators are eligible for brown tourism signage and have received a signposting accreditation letter from VisitScotland; such communication and liaison including as a minimum inspection and recording of the tourist operator's accreditation letter (and supporting documentation) from VisitScotland in respect of tourist signing applications.

(v) advising VisitScotland of tourist operators which are given tourist signs (brown or otherwise),

(vi) advising the Director when tourist signs are at the end of their serviceable life and identifying their locations,

(vii) when notified by VisitScotland, advising the Director of signs which no longer have accreditation from VisitScotland, and

(viii) the operation of flaps and covers on existing and new signs.

1.2.3 The Operating Company shall implement the process for trunk road and motorway tourist signing applications as set out in Transport Scotland's *Trunk Road and Motorway Tourist Signposting Policy and Guidance*.

1.2.4 When responding to applicants the Operating Company shall use the appropriate model letter, together with the relevant schedule, as set out in Transport Scotland's *Trunk Road and Motorway Tourist Signposting Policy and Guidance*.

The Operating Company shall issue to the Director a copy of the signed letter of agreement duly completed by the applicant.

1.2.5 The Operating Company shall ensure the details of each sign and associated road restraint system shall be identified and recorded in the Integrated Roads Information System.

1.3 Temporary Traffic Signs to Special Events

1.3.1 The Operating Company shall undertake the authorisation of temporary traffic signs to any Special Event.

1.3.1 Where a Special Event requires a carriageway or road closure, the Operating Company shall follow the procedures referred to in the Specification.

1.3.2 The Operating Company shall notify the Director immediately of the details of each request for authorisation for temporary traffic signs to Special Events.

1.3.3 When making a decision on authorisation of temporary traffic signs, the Operating Company shall:

(i) follow the document *TAL 04/11 Provision of Traffic Signs to Special Events issued by the Department for Transport in October 2011*, and

(ii) follow the advice issued by the Director.

1.3.4 A decision on each application shall be given to the applicant within 10 Working Days of receipt of the application, except where expressly agreed otherwise by the Director.

1.3.5 The Operating Company shall ensure that temporary traffic signing shall be erected for a limited period to guide traffic to Special Events.

1.3.6 The Operating Company shall ensure that temporary traffic signs are removed as soon as practicable after conclusion of the Special Event to which they relate.

If such signs are not removed by 48 hours after the end of the Special Event they shall be treated as unauthorised signs in accordance with paragraph 1.4 of this Part.

1.4 Unauthorised Signs

1.4.1 The Operating Company shall identify and advise the Director of any unauthorised signs outwith the Unit that may cause a distraction to road users within the Unit in order for the Director to notify the local planning authority responsible for authorising such signs.

1.4.2 The Operating Company shall identify and advise the Director of any unauthorised signs that are placed within the Unit. The Operating Company shall take all reasonable steps to determine the ownership of any such unauthorised signs.

1.4.3 Where an unauthorised sign is located within the Unit and the ownership of the sign is known, the Operating Company shall comply with the requirements of paragraph 1.4.4 of this Part or such other action that the Director requires.

1.4.4 The Operating Company shall remove the unauthorised sign immediately to safe temporary storage and:

(i) notify the owner of the temporary storage location of the relevant unauthorised sign,

(ii) identify a prescribed date, not less than 20 Working Days from the date of notification, by which time the owner is to collect the unauthorised sign, and

(iii) inform the owner that the Operating Company may dispose of the relevant unauthorised sign if it is not collected by the owner by the prescribed date.

Should the unauthorised sign not be collected by the prescribed date stated in the notification, the Operating Company shall remove and dispose of the relevant unauthorised sign and inform the owner in writing.

1.4.5 Where ownership of the unauthorised sign cannot be determined, the Operating Company shall remove the sign as soon as practicable to a suitable storage area provided by the Operating Company where it shall be held for 20 Working Days before being disposed of by the Operating Company.

Should the owner identify themselves during the 20 Working Day period following removal of the sign, the Operating Company shall:

(i) advise the owner of the location where the unauthorised sign can be collected, and

(ii) agree a suitable time to allow the owner to collect the unauthorised sign.

1.4.6 The Operating Company shall keep Records of all actions and transactions related to the requirements of paragraphs 1.4.1 to 1.4.5 of this Part.

1.5 Election Advertisements on Trunk Roads

1.5.1 The placing of election advertisements within the Unit is not permitted. Any registered political party, registered third party or election candidate who approaches the Operating Company seeking authorisation for election advertisements shall be informed of this policy.

1.5.2 Should the Operating Company become aware of any election advertisements placed within the Unit, the Operating Company shall:

(i) immediately remove the election advertisements to a suitable storage area provided by the Operating Company for collection by the owner,

(ii) notify the owner in writing that the election advertisements have been removed and the location where they can be collected by a prescribed date, not less than 10 Working Days from the date of the notification, and

(iii) dispose of any election advertisements not collected by the owner by the prescribed date.

1.5.3 The Operating Company shall keep Records of all actions related to the requirements of paragraphs 1.5.1 and 1.5.2 of this Part.

1.6 Truckstop Signposting

1.6.1 The Operating Company shall adhere to the Director's policy on truckstop facilities signposting as contained within Transport Scotland's *Signposting of Truckstop Facilities from Motorways and Other Trunk Roads – Policy and Guidance*.

1.6.2 The Operating Company shall follow the evaluation process defined within part II of Transport Scotland's *Signposting of Truckstop Facilities from Motorways and Other Trunk Roads - Policy and Guidance*.

1.6.3 The Operating Company shall liaise with the local road authority and the applicant as necessary for the implementation of approved signing schemes.

1.6.4 The Operating Company shall provide the Director with the application together with its assessment and report required in accordance with Transport Scotland's *Signposting of Truckstop Facilities from Motorways and other Trunk Roads - Policy and Guidance* and other associated documentation.

1.6.5 The Operating Company shall:

(i) consider the relevant local authority's signposting policy when making recommendations to the Director on applications,

(ii) advise the Director when truckstop signs are at the end of their serviceable life and identify their locations, and

(iii) consult with the Director and following receipt of his consent, remove signs which are agreed not to be required due to the truckstop facility no longer being in operation or as a result of a failure on the part of the truckstop facility provider to comply with its agreement with Transport Scotland.

1.6.6 The Operating Company shall ensure the details of each sign and associated road restraint system are identified and recorded in the Integrated Roads Information System.

signed for and on behalf of The Scottish Ministers

by ……...Roy Brannen…….

on …..…… December 2014……

at ……Glasgow……...……

…….…….
Authorised Signatory

signed for and on behalf of AMEY LG Limited

by
……...……

on ……..… December 2014……

at ……Glasgow……..….

……..…
Director/Company Secretary/
Authorised Signatory*

SCOTTISH MINISTERS' REQUIREMENTS

SCHEDULE 9 PART 1

SPECIFICATION FOR OPERATIONS (1)

CONTENTS **Page No.**

PREAMBLE TO THE SPECIFICATION	**1**
SPECIFICATION FOR HIGHWAY WORKS	**3**
APPENDIX 0/1 – CONTRACT-SPECIFIC ADDITIONAL, SUBSTITUTE AND CANCELLED CLAUSES TABLES AND FIGURES INCLUDED IN THIS CONTRACT	**7**
APPENDIX 0/2 - CONTRACT-SPECIFIC MINOR ALTERATIONS TO EXISTING CLAUSES, TABLES AND FIGURES INCLUDED IN THIS CONTRACT	**12**

SCOTTISH MINISTERS' REQUIREMENTS

SCHEDULE 9 PART 1

SPECIFICATION FOR OPERATIONS

PREAMBLE TO THE SPECIFICATION

1. The Specification for Operations shall be the *Specification for Highway Works*, published by The Stationery Office (formerly HMSO) as Volume 1 of the Manual of Contract Documents for Highway Works, as modified and extended by the following:

   (i) Appendix 0/1: Contract-specific Additional, Substitute and Cancelled clauses, Tables and Figures,

   (ii) Appendix 0/2: Contract-specific minor alterations to existing clauses, Tables and Figures,

   (iii) the Numbered Appendices listed in Appendix 0/3, and

   (iv) Appendix 0/5: Special national alterations of the Overseeing Organisation of Scotland, Wales or Northern Ireland.

   Appendix 0/4 contains a list of the drawings.

2. The relevant publication date of each page of the *Specification for Highway Works* is given in the Schedule of Pages and Relevant Publication Dates.

3. An Additional clause as indicated by a suffix 'A' in Appendix 0/5 is an alteration originating from the Overseeing Organisation of Scotland, Wales or Northern Ireland. An Additional clause as indicated by a suffix 'AR' in Appendix 0/1 is a Contract-specific alteration.

4. A Substitute clause as indicated by a suffix 'S' in Appendix 0/5 is an alteration originating from the Overseeing Organisation of Scotland, Wales or Northern Ireland. A Substitute clause as indicated by a suffix 'SR' in Appendix 0/1 is a Contract-specific alteration.

5. A Cancelled clause as indicated by a suffix 'C' in Appendix 0/5 is an alteration originating from the Overseeing Organisation of Scotland, Wales or Northern Ireland. A Cancelled clause indicated by a suffix 'CR' in Appendix 0/1 is a Contract-specific alteration.

6. Insofar as any of the Numbered Appendices may conflict or be inconsistent with any provision of the Specification for Highway Works the Numbered Appendices shall always prevail. Additionally, Numbered Appendices 0/1 and 0/2 shall take precedence over Numbered Appendix 0/5.

7. Any reference in this Specification to a clause number or Appendix shall be deemed to refer to the corresponding Substitute clause number or Appendix listed in Appendix 0/1, 0/2 or 0/5.

8. Where a clause is altered any original Table/Figure referred to in the clause shall apply unless the Table/Figure is also altered. Where a Table/Figure is altered any reference in a clause to the original Table/Figure shall apply to the altered Table/Figure.

9. Where a clause in the Specification relates to work goods or materials which are not required for the Operations it shall be deemed not to apply.

10. Any Appendix referred to in the Specification which is not used shall be deemed not to apply.

11. Where a clause in the Specification is prefixed by an # this indicates that this particular clause has a substitute National Alteration for one or more of the Overseeing Departments of Scotland, Wales or Northern Ireland. Substitute or additional National clauses shall be used within countries to which they specifically apply and they are deemed to replace corresponding clauses in the main text of the Specification as appropriate. The substitute National clauses are located at the end of the relevant Series together with the additional National clauses of the Overseeing Organisations.

12. Subject to the provisions of paragraph 13 below and other Parts of the Scottish Ministers' Requirements, the roles and functions of the Overseeing Organisation shall be undertaken by the Director or, if waived by the Director, the Operating Company.

13. Where the Specification provides for the Overseeing Organisation to require a test, waive the requirement for a test or alter testing frequency, the Operating Company shall exercise such decisions in accordance with the Scottish Ministers' Requirements stated in this Contract.

14. In this Specification any reference to the Contractor shall be deemed to be a reference to the Operating Company unless otherwise stated.

15 British Standards and British Standard Codes of Practice incorporated in this Contract by a reference which does not include a date shall be the respective editions current on the date 42 days prior to the date on which the Final Tender Submission shall be submitted.

SPECIFICATION FOR HIGHWAY WORKS

Schedule of Pages and Relevant Publication Dates

Series/Appendix	Page Number	Publication Date
000	1	March 1998
000	3F	May 2005
000	2	Nov 2006
100	2	May 2001
100	W1F	May 2005
100	12 to 14, 20F	Nov 2005
100	1, 3 to 7, N1, N3	May 2006
100	8, 9, 11, 15 to 19, N2, N4,	Nov 2006
100	10, N5 to N6F	Nov 2008
200	1, 3F	May 2001
200	2	May 2004
300	1	May 2001
300	4	November 2002
300	2, 3, 5 to 6F	May 2008
400	1 to 6, 8, 10 to 13F	November 2007
400	7, 9	November 2008
500	23, 24 ,26	November 2004
500	28F	May 2005
500	3, 22, N1F	May 2006
500	2, 5, 27	November 2006
500	6, 25	November 2007
500	1, 4, 7 to 21	November 2009
600	33	November 2003
600	2, 27, 32, 34 to 36, N1	November 2005
600	42 to 49, 51 to 68F, N2, N3, N4F	November 2007
600	37, 41, 50	November 2008
600	1, 3 to 24, 29, 38 to 41, S1, S2, SF3	November 2009
700	2, 3, 5, 6, N1, N3 to N5F	November 2006
700	4, N2	August 2008
700	1, 7 to 32F	November 2009
800	1 to 25F	November 2009

Series/Appendix	Page Number	Publication Date
900	2 to 5, 9 to 22, 24 to 26, 28 to 67F	August 2008
900	1, 6 to 8, S1F	November 2008
900	23, 27	May 2009
1000	3, 5 to 6	November 2005
1000	1, 2, 4, 7 to 15, 19 to 33F	May 2006
1000	16 to 18	November 2006
1100	1, 4F	November 2004
1100	2, N1F	November 2006
1100	3	August 2008
1200	5	May 2001
1200	2, 3, W1F	August 2003
1200	1, 14 to 16F	May 2004
1200	4, 9 to 11, 13	May 2005
1200	12	November 2006
1200	6 to 7, N1 to N4F	November 2007
1200	8	May 2008
1300	N2F	November 2003
1300	3, 4	November 2004
1300	1, 5 to 10, 12F	November 2005
1300	2, 11, N1	May 2006
1400	2, N1F	May 2001
1400	1, 3 to 9F	May 2006
1500	7	May 2001
1500	2	February 2003
1500	3, 4, 8 to 11, 13	November 2004
1500	1, 5, 6, 12, 14 to 17F	November 2006
1600	1, 4, 5, 9, 15, 17, 18, 24 to 26, 29 to 31, 35, 38, 49F	March 1998
1600	2, 6 to 8, 10 to 14, 16, 19, 27, 28, 32 to 34, 36, 37, 39 to 42, 44 to 48	November 2003
1600	3, 20 to 23, 43	November 2005
1700	2 to 7, 10 to 15	May 2004
1700	8, 9	May 2005
1700	1, 16 to 21, 22F	May 2006
1800	1, 4, 6, 8 to 9	May 2004

Series/Appendix	Page Number	Publication Date
1800	2, 3, 5, 7, 10 to 12F	November 2005
1900	17	May 2003
1900	1, 5, 8 to 14, 16, 18 to 30F, S1F to S2F	May 2005
1900	6, 7, 15	May 2008
1900	2 to 4	November 2008
2000	1, 3 to 4F	May 2001
2000	2	November 2004
2100	1, 4F	March 1998
2100	2	November 2003
2100	3	November 2005
2300	1	March 1998
2300	2 to 3F	May 2001
2400	1, 4, 7F	May 2005
2400	2	May 2006
2400	3, 5, 6	May 2008
2500	1	May 2001
2500	2, 8, 11F	November 2003
2500	6, 7, 9	May 2005
2500	10	November 2004
2500	5	May 2006
2500	3, 4	November 2006
2600	1	March 1998
2600	2 to 4	November 2003
2600	5	November 2004
2600	6	May 2005
2600	7F	November 2006
3000	1, 4 to 7, 10, 12 to 17, 19, 22 to 27F	May 2001
3000	20	November 2004
3000	2, 3	May 2006
3000	8, 9, 11, 18, 21	May 2008
5000	1, 4 to 19F, S1F	May 2005
5000	2, 3	November 2008
Appendix A	1 to 32F	May 2008
Appendix B	1	May 2006

Series/Appendix	Page Number	Publication Date
Appendix B	2 to 7F	November 2006
Appendix C	1	May 2005
Appendix C	2F	November 2006
Appendix D (NI)	N1F	March 1998
Appendix D	1F	May 2005
Appendix E	1F	May 2005
Appendix E (NI)	N1F	May 2005
Appendix F	1 to 55F	May 2009
Appendix G	1F	May 2004
Appendix H	1	May 2004
Appendix H	2	November 2005
Appendix H	3	November 2006
Appendix H	4 to 9F	November 2008

APPENDIX 0/1 – CONTRACT-SPECIFIC ADDITIONAL, SUBSTITUTE AND CANCELLED CLAUSES TABLES AND FIGURES INCLUDED IN THIS CONTRACT

List of Additional Clauses, Tables and Figures

Clause No	Title	Page No
070AR	Equality Act	
170AR	Licences Servitudes Wayleaves and Rights of Access	
171AR	Not used	N/A
172AR	Not used	N/A
173AR	Not used	N/A
174AR	Not used	N/A
175AR	Operating Company's Vehicle	
176AR	Incident Support Unit and Trunk Road Incident Support Service Operatives' Uniforms	
370AR	Repairs to and Renewal of Existing Fencing	
371AR	Snow Fences	
372AR	Rabbit, Hare, Deer and Otter Fence Specifications	
470AR	Repairs to Safety Barriers	
471AR	Repairs to Existing Pedestrian Guardrail	
472AR	Re-Tensioning of Safety Barriers	
473AR	Painting of Pedestrian Guardrails and Handrails	
570AR	Rodding Eyes	
571AR	Renewal of Filter Drain Material	
572AR	Closed Circuit Television Surveys	
573AR	High Pressure Water Jetting	
670AR	Siding Out	
770AR	Not used	N/A
771AR	Concrete Pavements Repair Systems	
970AR	Not used	N/A
971AR	Stone Mastic Asphalt (SMA) Surface Course	
972AR	Grip Testing	
973AR	Grip Tester	
974AR	TS2010 Stone Mastic Asphalt (SMA) Surface Course	
975AR	Overband Sealing	
976AR	Grade H Mastic Asphalt for Bridge Surfacing	
1170AR	Red Chipping Paved Areas	

Clause No	Title	Page No
1171AR	Relaying of Existing Footways	
1172AR	Artificial Stone Paving or Natural Stone Paving and Precast Concrete Paving Flags and Blocks	
1173AR	Laying of Artificial Stone Paving Natural Stone Paving and Precast Concrete Paving Flags	
1174AR	Timber Edging to Footways and Paved Areas	
1270AR	Passively safe sign posts	
1271AR	Snow Poles	
1272AR	Electroluminescent Signs for Traffic and Gantry Signs	
1370AR	Lamp Disposal	
1470AR	Temporary Overhead Feed to Lighting Units	
1770AR	Not used	N/A
1771AR	Additional Requirements for Concrete and Concrete Repairs	
1772AR	Removal of Concrete in Areas to be Repaired	
1773AR	Surface Preparation	
1774AR	Concrete Repairs	
1775AR	Foamed Concrete Fill to Structures and Backfilling to Drainage Trenches	
1870AR	Repairs to Existing Steelwork and Welds	
2070AR	Replacement of Bridge Deck Waterproofing ON Concrete Decks	
2071AR	Replacement of Bridge Deck Waterproofing on Steel	
2072AR	Repairs to Existing Waterproofing on Concrete Decks	
2370AR	Bridge Expansion Joints Used on Bridge Decks	
2371AR	Replacement of Bridge Deck Expansion Joints and Gap Sealants	
2372AR	Asphaltic Plug Joints	
2470AR	Repointing of Brickwork Blockwork and Stonework	
2471AR	Replacement of Precast Concrete Copings	
2472AR	Rebedding Existing Precast Concrete or Stone Masonry Copings	
2473AR	Replacement Tiling	
2474AR	Rebuilding of Defective Masonry	
2475AR	Lime Putty	
2476AR	Hydraulic Lime Mortars	

Clause No	Title	Page No
2670AR	Anti-Graffiti Coatings	
2671AR	Graffiti Removal	
2801AR	Winter Service Plant	
2802AR	Not used	N/A
2803AR	Winter Service Vehicle Data Logging and Transmitting Equipment	
2804AR	Winter Service Plant Data Receiving, Storing, Archiving and Web Based Systems	
3301AR	Rotary Coring in Carriageways	
3302AR	Rotary Coring in Structures	
3303AR	Structural Investigations	
3304AR	Inspection Patches within Surfacing on Bridge Structures	
3305AR	Trial Pits in Paved Areas	
3306AR	Falling Weight Deflectometer Tests	
3307AR	Dynamic Cone Penetrometer Tests	
3308AR	Structural Investigation Tests	
6101AR	Maintenance of Road Restraint Systems	
6102AR	Maintenance of Gullies Catchpits, Soakaways and Oil Separators	
6103AR	Maintenance of Drainage Grips	
6104AR	Maintenance of Linear Drainage Systems	
6105AR	Maintenance of Filter Material	
6106AR	Maintenance of Drainage Structures	
6107AR	Maintenance of Ancillary Drainage Items	
6108AR	Litter and Refuse	
6109AR	Maintenance of Road Studs	
6110AR	Maintenance of Structures - General	
6111AR	Maintenance of Expansion Joints	
6112AR	Maintenance of Bridge Drainage Systems	
6113AR	Maintenance of Parapets and Pedestrian Protection on Structures	
6114AR	Maintenance of Bearings and Bearing Shelves	
6115AR	Maintenance of Structures Over or Conveying Watercourses	
6116AR	Maintenance of Sign or Signal Gantries High Mast Lighting Masts	

Clause No	Title	Page No
6117AR	Maintenance of Non-Structural Items	
6118AR	Maintenance of Underpasses and Culverts used by Pedestrians and Cyclists and Retaining Walls	
6119AR	Maintenance of Road Traffic Signs	
6120AR	Maintenance of Lit Sign Units	
6121AR	Maintenance of Traffic Signals	
6122AR	Maintenance of Roadside Electrical Assets, Lighting and Power Supplies	
6123AR	Not used	N/A
6124AR	Maintenance of High Mast Lighting	
6125AR	Incident Response	
6126AR	Not used	N/A
6127AR	Removal of Graffiti, Posters and Encrusted Deposits	
6128AR	Not used	N/A
6129AR	Not used	N/A
6130AR	Maintenance of Geotechnical Assets	
6201AR	Requirements for Professional Services Staff	
Appendix F AR	Additional Publications	N/A

List of Substitute Clauses, Tables and Figures

Clause No	Title	Page No
110SR	Information Boards	
1202SR	General Requirements for Permanent Traffic Signs	
1204SR	Posts for Permanent Traffic Signs	
1801SR	Structural Steelwork General	
1802SR	Amendments to BS EN 1090-2:2008	
1803SR	Amendments to Steel Bridge Group Model Project Specification	
2101SR	Bridge Bearings General	
TABLE 50/2SR	Requirements for Bridges, Parapets, Bearings, CCTV Masts, Cantilever Masts, Steel Lighting Columns and Bracket Arms and other Highway Structures: Protective Systems	

List of Cancelled Clauses, Tables and Figures

Clause No	Title	Page No
	None	N/A

APPENDIX 0/2 - CONTRACT-SPECIFIC MINOR ALTERATIONS TO EXISTING CLAUSES, TABLES AND FIGURES INCLUDED IN THIS CONTRACT

Clause No	Title	Page No
104	Standards Quality Assurance Agreement Certificates and Other Approvals	
120	Recovery Vehicles For Breakdowns	
201	Clearing	
204	Hazardous Materials	
507	Chambers	
521	Water Jetting and Suction	
606	Watercourses	
610	Fill to Structures	
611	Fill Above Structural Concrete Foundations	
920	Bond Coats, Tack Coats and Other Bituminous Sprays	
930	EME2 Base and Binder Course Asphalt Concrete	
942	Thin Wearing Course Systems	
1101	Precast Concrete Kerbs Channels Edgings and Quadrants	
1102	In Situ Asphalt Kerbs	
1103	Freestanding In Situ Concrete Kerbs Channels and Edge Details	
1104	Footways and Paved Areas (Precast Concrete Flags and Natural Stone Slabs)	
1106	Footpaths and Paved Areas (In Situ Concrete)	
1107	Footways and Paved Areas (Concrete Block Paving)	
1108	Footways and Paved Areas (Clay Pavers)	
1209	Covering of Permanent Traffic Signs	
1213	Road Studs	
1301	General	
1302	Design of Lighting Columns, Brackets, CCTV Masts, Cantilever Masts, Foundations, Anchorages and Attachment Systems	
1303	Data Sheets	
1304	Identification and Location Markings	
1308	Handling, Transport and Erection	
1401	General	
1402	Site Records	
1403	Location of Lighting Units and Feeder Pillars	

Clause No	Title	Page No
1407	Luminaires	
1409	Photo-electric Control Units (PECUs)	
1412	Ballasts	
1416	Cut-outs, Fuse Holders, Fuses and Miniature Circuit Breakers (MCBs)	
1417	Base Compartment Fixing Arrangements	
1418	Feeder Pillars	
1419	Wiring	
1420	Earthing	
1421	Underground and Ducted Cable	
1422	Cable Joints	
1423	Armoured Cable Terminations	
1424	Inspection and Testing to be Carried Out by the Contractor	
1714	Structural Concrete	
2007	Integrity Testing of Bridge Deck Waterproofing	
2404	Mortar	
2412	Brickwork and Blockwork	
2417	Unreinforced Masonry Arch Bridges	
3006	Planting	
3007	Grass, Bulbs and Wildflower Maintenance	
3009	Establishment Maintenance for Planting	
3010	Maintenance of Established Trees and Shrubs	
3011	Management of Waterbodies	

Additional Clauses and Tables

Clause No.		Title and Written Text
070AR		**Equality Act**
	1	The Operating Company shall follow the guidance given in the *Roads for All: Good Practice Guide for Roads* in all Operations.
	2	Where the guidance given in the *Roads for All: Good Practice Guide for Roads* conflicts with the *Specification for Highway Works*, the "good practice guide" shall take precedence.
	3	Compliance with the *Roads for All: Good Practice Guide for Roads* shall not absolve the Operating Company from any liability under the *Equality Act.*
170AR		**Licences Servitudes Wayleaves and Rights of Access**
	1	The Operating Company shall gain access to boundary fences and adjacent areas from the Unit.
	2	If, in the opinion of the Operating Company, access from the Unit is impractical then the Operating Company shall notify the Overseeing Organisation of any licences, servitudes, wayleaves or rights of access that are needed to enable the work to be undertaken.
	3	The Operating Company shall not, under any circumstances, gain access across private land without the written permission of the Overseeing Organisation.
171AR		**Not used**
172AR		**Not used**
173AR		**Not used**
174AR		**Not used**
175AR		**Operating Company Vehicle**
		The Operating Company fleet vehicles used on the Trunk Road network shall comply with the livery requirements given in Appendix 1/75. As required by Clause 4.1.3 of Schedule 1, during each Winter Service Period, all vehicles actively involved in maintenance and management Operations shall be fitted with winter tyres on all wheels. Winter tyres are tyres marketed as such which are designed for enhanced traction and grip at low temperatures.
176AR		**Incident Support Unit and Trunk Road Incident Support Service Operatives' Uniforms**
		Each of the Operating Company's Incident Support Unit and Trunk Road Incident Support Service operatives shall wear the appropriate Incident Support Unit and Trunk Road Incident Support Service operatives' uniform when engaged in Incident Support Unit and Trunk Road Incident Support Service Operations on the Unit. The uniform requirements are given in Appendix 1/76.

Clause No.		Title and Written Text
370AR		**Repairs to and Renewal of Existing Fencing**
	1	Repairs to and renewal of existing fences shall comply with the relevant clauses in this Series.
	2	Repairs to and renewals of existing fences shall match the existing material and dimensions as far as is practicable. Repairs to and renewal of mammal proof fencing shall be undertaken in accordance with the specifications given in Appendix 3/1
371AR		**Snow Fences**
	1	Snow fences shall be in accordance with the recommendations set out in *Transport and Road Research Laboratory Report LR 362 Snow Fences* by L E Hogbin dated January 1970 and shall comply with the quality management schemes detailed in Appendix A.
372AR		**Rabbit, Hare and Deer Fence Specifications**
	1	**Rabbits and Hares** Fences to protect planting areas from rabbits and hares shall be in accordance with the following specification: Post and mesh fence with a galvanised hexagonal wire mesh 1200 millimetres wide having maximum openings of 31 millimetres and 1.25 millimetres (18 gauge) wire. Mesh to be affixed to two galvanised line wires of minimum 4 millimetres in diameter at 900 millimetres and 150 millimetres above ground level using galvanised fixing rings every 600 millimetres on top wire and 1200 millimetres on bottom wire. Mesh to be buried to 150 millimetres depth and returned outwards from protected area. End and change of direction posts to be 125 millimetres diameter round section, 1.87 metres long and driven 770 millimetres into the ground. Strut to be 65 millimetres round section located in notch on main post and held in the ground by 0.6 metre split rail. Line posts to be 1.6 metres long and 65 millimetres square section driven 500 millimetres into the ground at 4 metre centres. Mesh also to be fixed to line posts by six staples per post.
	2	**Deer** Fences to protect planting areas from deer shall be in accordance with the following specification: (i) 1.80 metres high timber post and 4 wire deer fence with rectangular wire mesh. (ii) Fence shall be constructed to the details on HCD Drawing H12 and British Standard 1722 Parts 2 & 3 with the following additions and amendments: (a) Top rectangular wire mesh to be type C/6/90/30. (b) Bottom rectangular wire mesh to be type C/8/80/15.

Clause No.		Title and Written Text
		(c) Timber posts and struts are to be for a 1.8 metres high fence selected from either Table 4 or 5 from British Standard 1722 Part 3. Timber straining posts are to be 2.90 metres length, 178 millimetres minimum diameter. (d) Intermediate posts are to be set or driven into the ground to a depth of 0.6 metres. Straining posts shall be set into the ground to a depth of 1.0 metre. (e) Struts are to be anchored in the ground in rammed backfill with a 450 x 102 x 51 millimetres timber thrust plate attached to the end of the strut. (f) 4 line wires complying with the requirements of Clause 2.1 British Standard 1722 Part 2, shall be provided set 50, 850, 1750, 1800 millimetres above ground level. The wire mesh shall be attached to the line wires to the details of Clause 3.3.2.4 British Standard 1722 Part 2. (g) Intermediate posts are to be provided at intervals not exceeding 2.75 metres. (h) Existing ground must be trimmed to maintain the 50 millimetres distance between the ground and the bottom of the fence.
	4	**Otters** Fences shall be in accordance with the following specification: Post and mesh fences in accordance with British Standard BS 1722: Part 2 Specification for rectangular wire mesh and hexagonal wire netting fences with a wire mesh having maximum openings of 50 millimetres square, wires in accordance with British Standard BS 4102: Specification for steel wire products for fences, galvanised in accordance with British Standard BS 443: 1982 Specification for testing wire coatings on steel wire and for quality requirements with wires of not less than 3 millimetres in diameter, a height above ground level of 1.50 metres (which includes a 300 millimetre 45 degree outward splay at the top of the fence), a depth below ground of 300 millimetres, with a further 300 millimetre lap laid horizontally out from the fence and a single strand of galvanised wire of not less than 4 millimetres in diameter securely fixed to the wire mesh at ground level; (refer to CIRIA C646 – Wildlife Fencing Design Guide 2006)
470AR		**Repairs to Safety Barriers**
	1	Repairs to safety barrier systems shall comply with the requirements of British Standard 7669-3 and BS EN 1317-1.
	2	Repairs of safety barrier systems shall be carried out in accordance with TD 19/06 and the manufacturers' latest drawings and instructions.
	3	All accident damage repairs shall be carried out using the same type of safety barrier system as currently exists at the location.

Clause No.		Title and Written Text
		The type of post used shall depend on the results from examination of post foundations and, where necessary, loading tests being carried out by the Operating Company in accordance with Annex B of British Standard 7669-3.
471AR		**Repairs to Existing Pedestrian Guardrail**
	1	Repairs to existing pedestrian guardrail will generally be the taking down of parts or sections of existing guardrail and the erection in their place of new parts or sections following accident damage or long term deterioration of the guardrail.
	2	When existing posts and concrete footings are removed and new posts and concrete footings are installed in the same location, any remaining voids shall be filled with concrete and the surrounding surface reinstated to match the existing. Concrete shall be mix ST1.
	3	Existing bolts nuts and washers shall not be reused.
	4	Repairs to pedestrian guardrails shall be carried out using panels and posts which match the original installation as closely as possible.
	5	Repaired and renewed pedestrian guardrail shall comply with clause 411.
	6	The Operating Company shall remove damaged sections of guardrail and close the resulting opening using suitable temporary guardrail.
	7	The Operating Company shall make permanent repairs using panels to match existing.
	8	Permanent repairs shall be carried out in accordance with the requirements of Schedule 7 Part 1 Paragraph 2.2 and, in any case, no later than 28 days after the removal of the damaged sections.
472AR		**Re-Tensioning Of Safety Barriers**
		Tensioned Corrugated Beam Safety Barrier
	1	Tensioned Corrugated Beam Safety Barrier shall be re-tensioned in accordance with British Standard 7669: Part 3, Section 2.
	2	Tensioning between any two limits shall not proceed until each limit is anchored sufficiently securely to resist the load effects due to tensioning.
	3	Tensioning shall be undertaken only when the ambient temperature is between -5°C and 25°C.
	4	Tensioning assemblies should be located not more than 70.5 metres apart and each installation should incorporate at least one adjuster assembly. If the inspection prior to re-tensioning indicates that additional tensioning assemblies are required, these shall be supplied and fitted by the Operating Company as part of the re-tensioning operation.
	5	On completion of tensioning, the centre of each screw securing beams to posts shall not be closer than 25 mm ±2 mm to the end of the slotted hole in the beam.
		Wire Rope Safety Barrier

Clause No.		Title and Written Text
	6	Wire Rope Safety Barrier shall be re-tensioned in accordance with British Standard 7669: Part 3, Section 2.5.
	7	Tensioning between any two limits shall not proceed until each limit is anchored sufficiently securely to resist the load effects due to tensioning.
	8	Tensioning shall be undertaken only when the ambient temperature is between 30°C and -10°C.
	9	The ambient temperature shall be recorded by the Operating Company.
		Tensioned Rectangular Hollow Section Beam Safety Barrier
	10	Assembly and tensioning shall be carried out in accordance with British Standard 7669: Part 3, Section 2.4.
	11	Tensioning between any two limits shall not proceed until each limit is anchored sufficiently securely to resist the load effects due to tensioning.
	12	Tensioning shall be undertaken only when the ambient temperature is between 10°C and 20°C.
	13	Tensioning assemblies shall be located not more than 70.5 m apart and each installation shall incorporate at least one tensioning assembly. If the inspection prior to re-tensioning indicates that additional tensioning assemblies are required, these shall be supplied and fitted by the Operating Company as part of the re-tensioning operation.
473AR		**Painting of Pedestrian Guardrails and Handrails**
	1	Painting of Pedestrian Guardrails and Handrails shall be carried out in accordance with Series 5000 – Maintenance Painting of Steelwork, including clause 5007SE Paint and Similar Protective Coatings as contained in the Manual of Contract Documents for Highway Works.
	2	All primed surfaces shall be painted with one coat of undercoating of the colour appropriate to the colour of finishing coat.
	3	Two finishing coats shall be applied.
570AR		**Rodding Eyes**
	1	Rodding eyes shall be either a Type 1 single or Type 2 double arrangement.
	2	Rodding eyes shall not be used for pipe diameters in excess of 225mm.
	3	The connecting pipe shall be laid at an angle of 45° to the horizontal.
	4	The connecting pipes shall be surrounded with 150mm concrete mix ST2 for the full depth of the connection and extending 150mm beyond the connection with the main drain.
	5	Covers and frames shall comply with the loading category of British Standard EN 124 as stated in Appendix 5/1 with a clear opening of 150mm or 225mm.
	6	Covers and frames shall be bedded and haunched with mortar to clause 2404 mix designation (ii) and set flush with the surface.
	7	Bedding mortar shall be a maximum of 25mm thick and placed directly on the concrete surround.

Clause No.		Title and Written Text
571AR		**Renewal of Filter Drain Material**
	1	Filter drain material shall be renewed by replacing the filter media with Type B material in accordance with Table 5/5 of clause 505.
	2	The depth of the existing material to be removed from within the trench shall be the depth to invert level of the pipe or the depth to the level of the underside of siltation if this is higher than invert level of the pipe. This depth shall be determined in advance of excavation and replacement operations by the excavation of trial pits.
	3	The width of the existing material within the trench to be removed shall be that of the existing drain filter material at the invert level of the pipe or at the level of the underside of siltation if this is higher than invert level of the pipe. This width shall be determined in advance of excavation and replacement operations by the excavation of trial pits.
	4	The trench shall be back-filled up to ground level or where the filter material is to be covered with red chippings to the underside of the red chippings with Type B material in accordance with Table 5/5 of clause 505.
	5	If required, any geotextile membrane present shall be replaced with new material equivalent to that removed.
	6	Where the filter drain is to be completely renewed, it shall be constructed in accordance with Highway Construction Detail drawing Number F2 with Type B material.
	7	Where the existing filter drain material is recycled it shall be tested in accordance with clause 710.
572AR		**Closed Circuit Television Surveys**
		Definition
	1	For the purposes of this clause, "drain" shall be deemed to include sewers, drains, filter drains, ducts, piped grips, combined drainage and kerb systems and linear drainage channel systems.
		Extent of Survey and Method to be Used
	2	Wherever instructed to do so or where subject to an Order, the drains shall be inspected by closed circuit television, all in accordance with Series 9000, MCHW 5.9, Parts 1-5, so that all cracks, blemishes, encrustations, open joints, silt, debris, collapsed sections, roots, vermin and alignment can be observed.
	3	Television cameras shall be drawn by cables and winches self-propelled tractor driven or fixed to rods.
	4	Where the survey of a drain length is stopped by a blockage in the drain, the drain shall be surveyed in the opposite direction on the other side of the blockage.
		Records
	5	The Operating Company shall provide a record on Digital Versatile Disc (DVD) of all drain lengths showing a continuous record of data displayed automatically on the monitor screen containing the following information:

Clause No.		Title and Written Text
		(i) automatic update of the camera's metreage position in the drain line, (ii) date of survey, (iii) direction of survey, (iv) pipe dimensions, and (v) length/location reference.
	6	The DVD recordings shall become the property of the Scottish Ministers.
		Photographs
	7	(i) Photographs shall be taken of Defects and samples of average condition. (ii) Where colour in-line photography is used, photographs shall be taken at intervals not exceeding 5 metres. (iii) Durable half plate prints shall be provided. (iv) The photographs shall be identified in relation to the metreage of the place taken and shall show clear definition and accurately reflect what is shown on the monitor. (v) The speed of the camera in the drain shall be limited to: 0.10 m/s for drains of diameter less than 200mm, 0.15 m/s for diameters exceeding 200mm but not exceeding 300mm, and 0.20 m/s for those exceeding 300mm.
		Reports
	8	(i) All reports shall be presented to the Overseeing Organisation in accordance with the format laid down in the *Manual of Sewer Condition Classification* – 4th Edition, published by the Water Research Council. (ii) Each chamber shall be recorded on a separate sheet except for buried chambers which may be included within a length. (iii) Photographs shall be mounted and shall follow the relevant page of the report. (iv) All dimensions shall be in metric units. (v) The report shall include the depth measured from cover level to invert for every drain in each chamber. (vi) One copy of the report shall be provided within 14 days of completion of each survey or if required by the Overseeing Organisation each section of the survey.
573AR		**High Pressure Water Jetting**
		High pressure water jetting shall be carried out using water which complies with sub-Clause 1702.3 by a jetting pump with a variable output up to 220l/minute at a minimum of 14N/mm^2. Minimum water storage capacity shall be 4.5 cubic metre. A minimum length of 180 metres of 25 millimetre diameter jetting hose shall be provided.
670AR		**Siding Out**

Clause No.		Title and Written Text
	1	Siding out shall be carried out at the edges of carriageways, footways and paved areas but may be extended to more general areas for the breaking up and removal of excessive or hardened dirt or weeds or any other undesirable material on the carriageway, footway or paved surface.
	3	Footways shall be sided out up to and including any existing footway edging or to a specified width of line.
	4	Where the sided out edges do not exceed a height of 75mm above the existing footway surface they may be trimmed with a vertical face.
	5	Where they exceed a height of 75mm above the existing paved surface they shall be trimmed to an approximately 45 degree battered face.
770AR		**Not used**
771AR		**Concrete Pavements Repair Systems**
	1	Repair materials to be used on the Trunk Road network for the repair of concrete pavements shall be approved in accordance with the Specification for Highway Works, Volume 0 Section 3, Part 1 SA 1/08, Annex C, Type Approval for Pavement Materials.
	2	The materials shall be used in accordance with the manufacturer's written instructions and certification procedures.
970AR		**Not used**
971AR		**Stone Mastic Asphalt (SMA) Surface Course**
		General
	1	Stone mastic asphalt shall comply with the general requirements of Series 700 and 900 and the specific requirements of sub-clauses 2 to 39 of this clause.
	2	Stone mastic asphalt shall be produced in mixing plants (that shall be registered to the British Standard EN ISO 9001) using 'Sector Scheme for the Production of Asphalt Mixes', described in Appendix A.
	3	The design for SMA to clause 971AR shall be to the general requirements of clause 942 and shall specifically comply with the requirements for wheel tracking and sensitivity to water. The Operating Company shall declare target aggregate gradings and binder contents prior to commencement of the Operations.
	4	The nominal installation depths shall be classified into three categories as given in Table 9/70.
		TABLE 9/70 – Nominal Installation Depth Classifications

Type	Type A	Type B	Type C
Nominal installation depth (mm)	<18	18 to 25	>25

		Aggregates
	5	Coarse aggregate shall be crushed rock or crushed slag complying with clause 901.

Clause No.		Title and Written Text
	6	The shape of the coarse aggregate shall comply with a maximum flakiness index of Category FI25 as defined in British Standard EN 13043, clause 4.1.6.
	7	Fine aggregate shall comply with clause 901 and shall comprise crushed fine aggregate derived from rock, slag or gravel, which may be blended with not more than 50% of natural sand.
	8	The resistance to polishing of the coarse aggregate shall have a minimum declared PSV category specified in Appendix 7/1 in accordance with British Standard EN 13043, clause 4.2.3. The resistance to abrasion of coarse aggregate shall have a maximum AAV specified in Appendix 7/1 in accordance with British Standard EN 13043, clause 4.2.
		Filler
	9	Added filler aggregate shall be hydrated lime, crushed limestone or Portland Cement, in accordance with the requirements of British Standard 594-1 and shall be not less than 2% by mass of total aggregate.
		Binder
	10	Bitumen shall comply with British Standard EN 12591 or BS 3690-3 and shall be produced in plants (that shall be registered to British Standard EN ISO 9001) using 'Sector Scheme for the Supply of Paving Grade Binders', described in Appendix A.
	11	The binder shall not be harder than penetration reference 50 (paving grade 40/60).
	12	If the deformation resistance requirement in sub-clause 18 of this clause shall not be required, then the binder penetration reference shall be as specified in Appendix 7/1.
		Binder Modifiers
	13	Binder modifiers pre-blended with bitumen or binder modifiers, including natural or man-made fibres, which are added or blended with base bitumen, complying with British Standard EN 12591, of the stated penetration range at the mixing plant, shall have a British Board of Agrément HAPAS Roads and Bridges Certificate. In the event that no such Certificates have been issued, binder modifiers, pre-blended modified binders or additives shall not be used without the prior written approval of the Overseeing Organisation.
	14	In the event that no British Board of Agrément HAPAS Roads and Bridges Certificates have been issued, the Operating Company shall provide with its design a data sheet giving details of the properties of the modified binders or additives proposed including those referred to in Appendix 7/1. The Operating Company shall provide the rheological product identification data for pre-blended modified binders in accordance with clause 928.
		Mixture

Clause No.		Title and Written Text
	15	The binder drainage of the loose mixture at the target composition at a temperature of 175°C in accordance with Draft for Development (DD) 232: 1996 shall not be more than 0.3% by total mass of mixture.
	16	The agreed binder content for the mixture shall be the target binder content ± 0.6%.
		Job Standard Mixture Approval
	17	Details of the design for the proposed mixture from each asphalt mixing plant shall be submitted to the Overseeing Organisation. The information may be obtained from either a job mixture trial or from the use of the mixture on a previous contract carried out in accordance with this clause, and shall include all the following particulars: (i) bitumen penetration reference, (ii) quantities of binder and aggregate, (iii) aggregate source and grading, (iv) proprietary name and generic type of binder modifier, (v) quantity of any binder modifier, including natural or man-made fibres added at the mixer, and (vi) modified binder and mixture data requirements specified in Appendix 7/1.
	18	If a modified binder, including any proportion of the modifier, is not fully recovered on analysis for determination of binder content, details of alterations to the test method or the correction necessary to the results, together with supporting data, shall be submitted to the Overseeing Organisation with the design of the proposed mixture for written consent prior to the use of the binder.
	19	The mixture shall be submitted to the Overseeing Organisation who shall then approve it in writing as the Job Standard Mixture, provided that: (i) the design of the mixture proposed complies with sub-clauses 1 and 3 of this clause, (ii) information has been submitted in accordance with sub-clauses 17 and 18 of this clause, and (iii) information submitted in accordance with sub-clause 18 of this clause has been approved in writing by the Overseeing Organisation.
	20	If the design for the mixture or constituent materials of a Job Standard Mixture is changed by the Operating Company, details of the revised mixture shall be submitted for written approval in accordance with sub-clause 17 of this clause.
	21	Job Standard Mixture trials may be carried out on or off the Site, however material laid for a Job Standard Mixture trial on Site which complies with this Specification may form part of the binder/regulating course in the permanent work.

Clause No.		Title and Written Text
		If carried out off the Site, trials may be arranged independently or in conjunction with other work.
		Mixing
	22	Unless otherwise specified by the supplier of the modified binder, stone mastic asphalt shall be mixed at a temperature in accordance with the requirements of British Standard 4987-1:2005 for the penetration reference of the bitumen. This shall be done in such manner that a homogeneous mixture of aggregate, filler, bitumen and additive is produced. At the time of mixing the coarse aggregate shall be in a surface dry condition.
		Transportation
	23	The transportation of Stone Mastic Asphalt shall be in accordance with BS 594987.
		Permanent Works
	24	When specified in Appendix 7/1, sampling and testing shall be carried out to establish compliance of material laid in the permanent work.
		Sampling from the Laid Material
	25	Samples of uncompacted material shall be taken from the paver as near to where the cores shall be taken as is practicable, in accordance with British Standard EN 12697 Part 27:2001 and British Standard EN 12697 Part 28:2001.
	26	Six 200 mm diameter cores shall be cut, where practical from the centre of the Lane, out of material from each mixing plant: (i) from material laid specially in a Job Standard Mixture approval trial, (ii) from the first 1 km length of stone mastic asphalt from a mixing plant laid in the permanent work, or (iii) within three days of laying stone mastic asphalt from a mixing plant in the permanent work, where less than 1 km length has been laid whichever occurs first.

Clause No.		Title and Written Text
	27	The 200 mm diameter cores shall be cut within three days of laying the material unless they have been cut under the requirements of sub-clause 26 of this clause. The cores shall be transported as soon as possible to the laboratory. If the storage period is less than four days, the storage temperature shall be within the range 0°C to 25°C. For storage beyond four days, the temperature shall be within the range 0°C to 5°C. Cores shall be stored on a flat face on a horizontal surface, and shall not be stacked. Site storage of cores where unavoidable and conditions of transportation shall be as close as is practicable to the laboratory conditions. The storage temperature and times, including whilst cores are on Site, shall be recorded.
	28	Three pairs of 150 mm diameter cores shall be cut at the same meterages as the 200 mm diameter core. One core of each pair shall be taken from the centre of the Lane adjacent to the 200 mm diameter core and one whose centre shall be between 500 mm and 1000 mm from the edge of the mat.
	29	Cores shall be taken after the stone mastic asphalt has cooled to ambient temperature and not less than 12 hours after laying and before trafficking unless otherwise specified in Appendix 7/1. The walls and base of all holes from which core samples shall have been cut shall be painted with hot bitumen or cold applied polymer modified intermediate or premium grade bitumen emulsion containing normally 60% binder immediately prior to making good. Core holes shall be backfilled with materials compacted to refusal with a circular headed vibrating hammer in layers not exceeding 75 mm thick. Hot base material shall be similar to existing pavement.
	30	In the permanent work, after the first 6 cores have been recovered and where the required thickness of the material exceeds 25 mm, for material from each mixing plant, not less than one pair of 200 mm diameter cores shall be cut from the centre of the Lane every 1 Lane kilometre laid. Where the day's production is less than 1 Lane kilometre, not less than one pair of 200 mm diameter cores shall be cut from the centre of the Lane.
		Tests and Calculations
	31	For each un-compacted sample, the compositional analysis shall be carried out in accordance with British Standard EN 12697 corrected by any correction factor approved under sub-clause 16 of this clause.
	32	Each six consecutive 200 mm diameter cores of material from the same mixing plant shall form a set of cores on a running basis. For each set, the wheel-tracking rate and rut depth shall be determined in accordance with the procedure in British Standard 598-110:1998 at the test temperature specified in Appendix 7/1.

Clause No.		Title and Written Text
	33	For each 150 mm diameter core the bulk density shall be determined in accordance with the procedure in British Standard EN 12697-6:2003. The bulk density at a chainage shall be the mean from the two cores taken at a chainage. Subsequent to determining the bulk density, the maximum density shall be determined from the pair of the cores in accordance with BS EN 12697-5:2002.
	34	The air void content of each pair of 150 mm diameter cores shall be calculated to ± 0.1% as follows: Air voids content = $\frac{(1-\rho) \times 100\ \%}{\rho\ \text{Max}}$ where: ρ shall be the bulk density in accordance with British Standard EN 12697-6 (Mg/m^3), and ρ Max shall be the maximum density in accordance with British Standard EN 12697-5 (Mg/m^3).
		Compliance Requirements
	35	When determined in accordance with British Standard EN 12697-1 and British Standard EN 12697-2 the compositional analysis shall demonstrate compliance with following: (i) the binder content on analysis shall not differ from the target binder content declared by the Operating Company by more than ± 0.6%, and (ii) the aggregate grading shall not differ from that declared by the Operating Company.
	36	Deformation resistance shall be determined in accordance with the requirements of clause 952 and the deformation values specified in Appendix 7/1.
	37	The air voids content shall be not more than 6% for a pair of cores at a chainage and shall be not more than 4% for the mean of any six consecutive determinations from pairs of cores from material from the same mixing plant. When the Stone Mastic Asphalt is being used as a regulating course at thicknesses below 30 mm, the appropriate limiting void contents shall be 8% and 6% respectively.
		Reporting Results
	38	Where it is specified in Appendix 1/5 that the Operating Company is responsible for testing, the individual determinations including location of samples and results from all tests, shall be given to the Overseeing Organisation in writing within two weeks of the material having been laid.

Clause No.		Title and Written Text
		Surface Preparation
	39	Existing surfaces shall be prepared in accordance with the requirements of British Standard 594987:2010 and Series 700 clauses. Bond coats and tack coats shall be in accordance with clause 920 except that where the thickness of the stone mastic asphalt is less than 20 mm, only polymer modified bond coats shall be used.
		Laying
	40	Unless required otherwise in Appendix 7/1, stone mastic asphalt shall be laid and compacted in accordance with the requirements of clause 901, to the thickness stated in Appendix 7/1.
		Weather Conditions
	41	The weather conditions specified in clause 945 shall not apply to stone mastic asphalt laid in accordance with this clause.
	42	The manufacturer's recommendations for the use of modified binders in various weather conditions for laying and compaction temperatures of the modified stone mastic asphalt shall be submitted to the Overseeing Organisation with details of the modified binder required under sub-clause 9 of this clause and shall include information on early trafficking particularly in hot weather.
		Temporary Trafficking
	43	The Operating Company shall ensure that the pavement material has adequately cooled and hardened in accordance with clause 903, before it is subjected to temporary traffic.
	44	The material shall not be trafficked if its surface temperature exceeds 25°C unless the maximum temperature within the mat has fallen below 35°C.
972AR		**Grip Testing**
		General Requirements
	1	The surface course skid resistance shall be measured using the Grip Tester braked –wheel fixed-slip device in accordance with British Standard 7941-2:2000, or equivalent devices possessing appropriate validation shall conform with *Table 2.4 Minimum Grip Number* of clause 974AR. All surface course materials laid in accordance with clause 974AR shall have Skid Resistance carried out with a Grip Tester in accordance with the requirements for testing using the Grip Tester given in clause 974AR. Where Proprietary SMA surface courses to Series 900 clause 942 or clause 971AR material are laid in areas of greater than 2000m² the surface course material shall also be tested using the Grip Tester at four weeks and six months (clause 974AR Table 2.4) for the appropriate Site class. The results shall be forwarded to the Overseeing Organisation within seven days of the Grip Test being completed for monitoring purposes.

Clause No.		Title and Written Text
		Survey Procedure
	2	Prior to any testing of the surface course commencing a full calibration check shall be carried out at the nominated reference Site at the start of each testing day.
	3	All testing Sites shall be pre-surveyed by the Operating Company to ensure that start and end points can be identified. These points shall be marked by the Operating Company.
	4	Where a Site contains multiple Lanes, only the near side Lane or nearest side Lane, excluding the hard shoulder, shall be tested.
	5	Each section shall be tested twice with the Grip Tester. If the section average values of these first two tests are within 0.02, then the first run shall be reported as the survey result.
	6	After each survey both speed and water flow shall be checked and if out with tolerance for 75% of the section the run shall be repeated. If speed tolerance is out of tolerance due to congestion or other factors occurred on the section, the Site shall be revisited when a compliant run can be carried out. Tolerance for speed shall ± 10% and tolerance for water flow shall be ± 20%.
	7	GPS data shall be recorded and referenced to the Overseeing Organisation IRIS referencing system. GPS data shall have accuracy better than 5m and shall be collected with a minimum update of 0.1 seconds.
		Reporting
	8	The Operating Company shall submit to the Overseeing Organisation a printed report in addition to test data provided in an electronic format. Copies of calibration Certificates, ongoing calibration results /checks and reference Site checks shall be included within this report which shall be forwarded to the Overseeing Organisation within seven days of the Grip Test being completed.
	9	The report shall include test data in the following formats: (i) Tabular data showing the section average of all valid runs for the survey with the 1st valid run being indicated as the test result, (ii) A colour coded map, and (iii) A graphical output based on the tabular data.
	10	The Operating Company shall submit monthly reports of all test results including details of the location along with the findings to the Overseeing Organisation.
	11	Data shall be reported in a format compatible with IRIS, preferably CSV files.
		Longer-Term Skid Resistance
	12	After two years trafficking and within the SCRIM testing season, skid resistance will be measured by Transport Scotland (via SCRIM) in accordance with HD 28/04 (DMRB 7.3.1).

Clause No.		Title and Written Text
973AR		**Grip Tester**
		General
	1	The Director will provide the Grip Tester and, except where otherwise specified, the Operating Company shall maintain and operate it.
	2	The Grip Tester will be handed over to the Operating Company by Commencement of Service Date 1.
	3	The Operating Company shall store the Grip Tester undercover in a secure location.
		Maintenance
	4	The Operating Company shall maintain the Grip Tester in accordance with the *Grip Tester MK2 D-TYPE Maintenance Manual*, except where otherwise specified.
	5	Maintenance referred to in clauses 2.3 (Annual Maintenance) and 2.4 (Calibration) of *Grip Tester MK2 D-TYPE Maintenance Manual* are the responsibility of the supplier and will be paid for by the Scottish Ministers. The Operating Company shall arrange for this maintenance and delivery and return of the Grip Tester to the supplier.
	6	In addition to the requirements of *Grip Tester MK2 D-TYPE Maintenance Manual* the Operating Company shall ensure that the Grip Tester is regularly maintained in a clean and presentable condition ensuring required functionality at all times.
	7	The Operating Company shall be responsible for any loss or damage to the Grip Tester and for effecting such additional insurance as may be necessary to cover the risk of such loss or damage from any cause.
		Vehicle
	8	The Operating Company shall supply an appropriate vehicle which may be dedicated or multi purpose. The vehicle will be fitted out by the Grip Tester supplier at the expense of Scottish Ministers during Mobilisation Period 1 not later than 30 days prior to Commencement of Service Date 1. The Operating Company shall arrange for this fitting out and delivery and return of the vehicle to and from the supplier.
		Staff
	9	A minimum of two operatives is required to operate the apparatus, a driver and a Grip Tester operator. The Grip Tester operator shall be appropriately experienced and qualified.
	10	Initial training by the supplier of the operatives, and Skid Resistance Manager in terms of operation, maintenance and software use will be arranged at the start of the Mobilisation Period and at the expense of Transport Scotland. Any additional training shall be provided at the expense of the Operating Company.
		Operations
	11	An annual certification process shall be undertaken for each Grip Tester to be used on the Unit. The procedure shall be carried out in accordance with

Clause No.		Title and Written Text
		ASTM E1844 test procedures where network machines are verified against a reference machine. The testing procedure must produce a check that machines are within a ± 0.02GN tolerance of each other. An additional certification check shall be carried out monthly to ensure that machines continue to read within specification.
	12	In addition to pre-survey checks as per section 2.1 of the *Grip Tester MK2 D-TYPE Maintenance Manual*, the checks shall be conducted in accordance with clause 974AR, except where otherwise specified.
	13	The calibration check is not necessarily required where use relates to the rapid deployment of the Grip Tester to spillage Sites. In these instances a simple relative measurement can be obtained to reveal the differential at the spill Site by taking measurements either side of the spillage area.
	14	The Operating Company shall provide a written procedure for the calibration of the Grip Tester prior to any survey. The procedure will be reviewed and approved by the Overseeing Organisation.
		Apparatus
	15	The Operating Company shall provide one laptop along with the appropriate software to operate the apparatus in accordance with the Roadbase Grip Tester Survey Software for Roads User Manual.
	16	The supplier will provide three user manuals: *Grip Tester Maintenance Manual, Roadbase Grip Tester Survey Manual*, and the *Grip Tester Automatic Watering System Operations Manual.*
974AR		**TS2010 Stone Mastic Asphalt (SMA) Surface Course**
		General
	1	The TS2010 stone mastic asphalt (SMA) shall conform to British Standard EN 13108-5:2006 where applicable and with TS2010 Surface Course Specification and Guidance Issue 01 (December 2010). Where the requirements of TS2010 Surface Course Specification and Guidance differ from other clauses, standards and specifications, the requirements of *TS2010 Surface Course Specification and Guidance* shall take precedence.
	2	Conformity shall be established in accordance with British Standard EN 13108-20:2006 and British Standard EN 13108-21:2006 although formal CE marking is not currently required.
	3	The requirements of clauses 901 and 903 apply and the performance guarantee shall be to clause 942.15 and 942.16.
	4	Any references made to tables in this clause shall be deemed to be references to those in TS2010 Surface Course Specification and Guidance.
975AR		**Overband Sealing**
	1	The Operating Company shall use systems holding Highway Authorities Product Approval Scheme certification and the system shall be applied in accordance with Highway Authorities Product Approval Scheme requirements

Clause No.		Title and Written Text
		The minimum skid resistance value of the overband material shall be 60 measured by the skid resistance pendulum method. All material removed from the cracks and joints shall be removed to a licensed waste disposal site. All loose material shall be removed off the Unit to a licensed waste disposal site or recycling centre.
976AR		**Grade H Mastic Asphalt for Bridge Surfacing**
	1	The grade H mastic asphalt shall meet the following requirements: 1.1 Asphaltic Cement The asphaltic cement shall comply with the following requirements: • Penetration point at 25°C: 12 ± 3 • Softening point, °C: 80 ± 10 • Loss on heating for 5h at 163°C, % by mass: max. 2.0 • Solubility in trichloroethylene, % by mass min. 75, max. 79 • Ash (mineral matter), % by mass: min. 16.5, max. 20.0 In all other respects the bitumen used in the manufacture of the asphaltic cement shall comply with British Standard EN 13108-6: 2006, and the lake asphalt and lake asphalt-bitumen mixtures used in the manufacture of the asphaltic cement shall comply with British Standard EN 13108-4: 2006 Annex B. 1.2 Aggregate The total aggregate in the laid material and in material transported hot to the point of laying shall consist of fine aggregate complying with the fine aggregate section below, and coarse aggregate complying with the coarse aggregate section below. Material supplied in block form shall contain only fine aggregate complying with the fine aggregate section below. 1.3 Fine Aggregate The fine aggregate shall consist of naturally occurring limestone ground to a grading as set out in the table below, and shall have a calcium carbonate content of not less than 80% by mass when determined in accordance with British Standard 6463: Part 2. Grading of limestone fine aggregate

Clause No.		Title and Written Text

Grading using test sieves by the wet sieving method described in British Standard 812: Part 103	% by mass	
	Min.	Max.
Retained on 2.36mm	-	3
Passing 2.36 mm retained on 600 µm	5	25
Passing 600 µm retained on 212 µm	10	30
Passing 212 µm retained on 75 µm	10	30
Passing 75 µm	40	55

1.4 Coarse Aggregate

1.4.1 The coarse aggregate shall be material substantially retained on 2.36mm test sieve and shall consist of one of the following:

crushed rock of one of the following types: basalt, gabbro, granite, gritstone, hornfels, limestone, porphyry or quartzite;

gravel of one or more of the groups in (a) or flint.

1.4.2 For material transported hot charge to the point of laying the size and percentage of coarse aggregate incorporated in the mastic asphalt at the time of manufacture shall be in accordance with the limits given below.

The percentage of coarse aggregate shall be such that the total percentage of material retained on a 2.36mm test sieve on analysis of the mastic asphalt as laid, including that portion of the fine aggregate retain on a 2.36mm test sieve, shall fall within the appropriate limits given in below:

Nominal size of coarse aggregate complying with British Standard EN 13043: 10mm

Coarse aggregate content, % by mass of total mix: 45 ± 10

1.5 Manufacture of the mastic asphalt

At this stage the mastic asphalt shall show on analysis a composition within the limits specified in the table below and, if not required for immediate use, shall be cast into blocks.

Composition by analysis of mastic asphalt: (before addition of coarse aggregate)	
Grading of mineral aggregate using test sieves	% by mass of mastic asphalt

Clause No.		Title and Written Text

	Min.	Max.
Retained on 2.36mm	-	2.5
Passing 2.36 mm retained on 600 µm	4	21
Passing 600 µm retained on 212 µm	8	32
Passing 212 µm retained on 75 µm	8	25
Passing 75 µm	40	56
Soluble bitumen	14	17
Note: The composition of the total mix should on analysis comply with this table after due allowance has been made for the presence of the mass of material retained on a 2.36mm test sieve.		

1.6 Mixing

1.6.1 Mastic asphalt cement shall be mixed off-Site and transported to the Site in a lorry mounted hot box system. The % TLA added shall be witnessed by the Supervising Officer at the Plant.

1.6.2 The fine aggregate shall be thoroughly mixed with the asphaltic cement.

1.6.3 Mixing temperature of aggregate with asphaltic cement is to be continuously monitored throughout mixing. Maximum permitted temperature = 230°C.

1.7 Laying

1.7.1 The surface on which the mastic asphalt is to be laid (waterproofing membrane) should be swept clean of debris and standing water and also in a dry condition.

1.7.2 At least 20 No. readings are to be made of the material temperature. Laying temperature is to be between 175°C and 230°C.

1.7.3 Air temperature and pavement temperature is to be recorded at hourly intervals throughout the works.

1.8 Hardness number

The hardness number of the wearing course as laid shall be tested as specified in British Standard 5284, and shall be between 10 and 20 at 35°C. In addition, Marshall mould specimens shall be tested in accordance with British Standard 598-107:2004, except that the stability shall be recorded at a flow of 5mm and 15mm. The required stability range at each flow rate shall be reported after initial testing.

Clause No.		Title and Written Text
1170AR		**Red Chipping Paved Areas**
	1	Red chipping paved areas shall be 14mm nominal size natural red igneous stone in a single layer 80mm thick.
1171AR		**Relaying of Existing Footways**
	1	Relaying of existing footways shall be carried out with materials compatible with the adjacent areas.
1172AR		**Artificial Stone Paving or Natural Stone Paving and Precast Concrete Paving Flags and Blocks**
	1	Before work commences in any individual existing artificial stone paving, York stone paving or precast concrete flag or block paved footway, the Operating Company shall record the dimensions and number of flags or blocks to be replaced and take photographic Records.
	2	The Operating Company shall carefully lift the flags or blocks and set aside.
	3	Flags or blocks not permanently re-laid on the same day as they are lifted shall be stacked in neat piles to a height not exceeding one metre.
1173AR		**Laying of Artificial Stone Paving, Natural Stone Paving and Precast Concrete Paving Flags and Blocks**
	1	Paving of artificial stone paving, York stone paving or precast concrete paving flags shall be reconstructed to match existing as closely as possible and shall be in accordance with British Standard 7533.
1174AR		**Timber Edging to Footways and Paved Areas**
	1	Timber shall be as described in clause 304 and sized to match existing or 75mm x 32mm whichever is the lesser.
	2	Fixing shall be by 50mm x 50mm x 300mm pointed pegs at 600mm centres.
	3	Timber edgings and pegs shall be pressure impregnated with preservative in accordance with clause 311.
1270AR		**Passively Safe Sign Posts**
	1	Passively safe sign posts shall be in accordance with BS EN 12767: 2007 erected in accordance with the manufacturer's instructions.
1271AR		**Snow Poles**
	1	Snow poles shall be 50mm external diameter aluminium poles 20mm gauge 2.5m long with ends capped and 150mm reflective strips at the top of the pole and 500mm above ground level.
	2	On single carriageways the reflective strips are to be red facing the oncoming adjacent traffic with white on reverse side.
	3	In central reserves on dual carriageways the reflective strips are to be orange on both faces.
	4	Pole foundations shall be 400mm x 400mm x 300mm deep in-situ concrete grade ST2 to clause 2602 finished flush with ground level.
	5	Tops of poles shall be 2.2 metres above the adjacent ground level.

Clause No.		Title and Written Text
	6	Poles shall be located 1.2 metres from the carriageway edge.
	7	Poles shall be located at 50 metre intervals on each verge at staggered intervals along opposing verges.
1272AR		**Electroluminescent Signs for Traffic and Gantry Signs**
	1	**Sign Specifications:** (i) Translucent retro-reflective material must be used, (ii) patented Encapsulated Electroluminescent Lamp Pre-wired with 3.5 metre cable for connection to driver, (iii) weatherproof IP66 construction, (iv) electromagnetic compatibility ("EMC") and low voltage directive ("LVD") compliant, (v) acrylic vandal resistant sheet, (vi) operating voltage 50 -150 volts root mean squared, (vii) operating temperature -10 degrees Celsius to +25 degrees Celsius, (viii) CE marked, (ix) conforms to British Standard EN 12899, (x) conforms to British Standard EN60598 (where applicable), and (xi) Class II double insulated construction - no earth connection required. Laminated bonded construction onto standard aluminium 11-Gauge back-plate.
	2	**Driver Specifications:** (i) sealed unit for mounting inside post top, (ii) microprocessor controlled, (iii) integral IP66 photocell (set approx 70 lux), (iv) suitable for EL signs up to 1.5 x 4.5 metres (or equivalent load), (v) EMC & LVD compliant, (vi) output cables for connecting to sign and mains, (vii) CE marked, (viii) operating temperature -10 degrees Celsius to +25 degrees Celsius, (ix) weatherproof construction - IP44, and (x) tamperproof stainless steel fixings supplied.
1370AR		**Lamp Disposal**
	1	The Operating Company shall collect, transport and dispose of waste lamps in accordance with the requirements of the *Waste Electrical and Electronic Equipment Regulations*.

Clause No.		Title and Written Text
1470AR		**Temporary Overhead Feed to Lighting Units**
	1	No temporary overhead cable shall be installed until the lighting columns involved have been assessed as being suitable for the additional mechanical loading placed on them.
	2	Cables used for any temporary overhead feed to lighting units or luminaries shall consist of sheathed or armoured cables supported by a steel catenary wire and shall be installed in accordance with the requirements of British Standard 7671:2008. The minimum height above ground of the span shall, according to the location, be as follows: (i) 10 metres for motorways, and (ii) 5.8 metres for all other roads and road crossings.
1770AR		**Not used**
1771AR		**Additional Requirements for Concrete and Concrete Repairs**
		Storage of Materials
	1	All proprietary materials shall be stored in accordance with the manufacturer's written instructions.
		Records
	2	As repair work proceeds, the Operating Company shall keep Records including digital date stamped photographs.
		High Pressure Water Jetting
	3	High pressure water jetting shall use clean and fresh potable water. The Operating Company shall not add antifreeze agents or any other chemicals to water used for jetting activities.
1772AR		**Removal of Concrete in Areas to be Repaired**
	1	Concrete shall be cut and removed from areas specifically identified following inspection and testing.
	2	Concrete shall be removed from the area until sound concrete is reached. Where reinforcement is exposed, concrete shall be removed for a minimum distance of 25mm beyond the rear face of the reinforcement. Where corroded reinforcement is identified, the area of concrete removed shall be extended to expose 100mm of un-corroded reinforcement.
	3	The position and depth of the reinforcement shall be determined by the Operating Company.
	4	The perimeter of the concrete to be removed shall be saw cut perpendicularly to the face of the concrete to a depth of not less than 15mm or to within 10mm of the reinforcement whichever is the lesser. Cut edges shall be abraded. At the upper limits of repairs to be made using repair concrete, sloping cuts may be used to avoid the entrapment of air when the concrete is poured.

Clause No.		Title and Written Text
	5	Removal of concrete by water jetting shall be carried out by companies registered with the Association of High Pressure Water Jetting Contractors.
	6	Where concrete is removed by high pressure water jetting, final trimming of the area may be broken out using other processes.
	7	Overbreak of concrete shall be made good using a concrete repair system selected from clause 1774AR.
	8	Reinforcement damaged during concrete removal shall be made good. Existing reinforcement which has corroded or is otherwise damaged shall be removed and additional steel reinforcement shall be lapped or welded onto the existing reinforcement. All such welding shall be in accordance with clause 1717. All loose reinforcement shall be securely tied with stainless steel tying wire.
	9	The Site shall be kept free of debris or standing water arising from the high pressure water jetting and other activities.
	10	On completion of removal of concrete, all concrete surfaces and exposed reinforcement which are in contact with repair materials shall be prepared in accordance with clause 1773AR.
1773AR		**Surface Preparation**
		General Requirements
	1	Blast cleaning shall utilise the appropriate grade and particle shape of abrasives. Non-metallic abrasives shall not be recycled.
	2	Only clean potable water shall be used for cleaning and rinsing.
		Preparation of Surfaces of Reinforcement
	3	All detrimental contamination and corrosion products shall be removed from steel reinforcement. The surfaces shall be free of embedded abrasive particles and corrosion products when viewed through a 10 times illuminated magnifying glass.
	4	Dry blast cleaning shall be by a dry air/abrasive system. Wet blast cleaning shall be by a low pressure air/water/abrasive system. The air/water pressure shall be adjustable to a maximum of 14 bar. Within an hour after blast cleaning the treated reinforcement shall be pressure washed with clean water.
		Preparation of Surfaces of Concrete
	5	All cement laitance contaminants and loose friable material shall be removed from concrete surfaces. Concrete surfaces shall be wetted one hour before repair concrete is applied.

Clause No.		Title and Written Text
		Concrete surfaces shall be free from standing water when repair concrete is applied.
	6	The surface profile after cutting out by high pressure water jetting shall be irregular with aggregate particles projecting above the surrounding concrete matrix. All concrete surfaces exposed by percussive methods to receive repair materials, shall be prepared by low vibration processes, such as grit blasting or high pressure water jetting, to remove all fractured aggregate particles and expose a sound substrate.
		Trials
	7	The Operating Company shall remove, cut back and prepare the surface of an area of one square metre of concrete to be repaired as a trial of the methods proposed for carrying out the work and obtain photographic Records.
1774AR		**Concrete Repairs**
		General
	1	Concrete repairs shall be carried out using either, normal-flow concrete proprietary repair mortar, high-flow repair concrete proprietary sprayed concrete or a proprietary repair system proposed by the Operating Company and consented to in writing by the Overseeing Organisation. Where concrete repairs are re required to the top surface of bridge decks the repair material shall be compatible with the waterproofing system. Crack repairs carried out by a resin injection system shall be proposed by the Operating Company and subject to written consent by the Overseeing Organisation.
	2	Proprietary repair materials and systems shall have an Agrément Board Roads and Bridges Certificate registered with the Overseeing Organisation.
	3	Proprietary repair mortars shall be used for repair areas less than 1m^2 or repair depths less than 30mm deep. Normal flow concrete or high flow concrete or sprayed concrete shall be used for repair areas greater than 1 square metre or greater than 30mm deep or as otherwise proposed by the Operating Company and subject to consent in writing by the Overseeing Organisation.
		Materials for Repairs Using Normal Flow Concrete
	4	(i) Cement shall comply with sub-clause 1702.1, (ii) Repair concrete shall be a designed concrete as defined in sub-clause 1701.2 and clause 1705, (iii) Cement or combination content shall be not less than 360 kg/m^3 in any designed concrete, (iv) Maximum aggregate size shall be 20mm,

Clause No.		Title and Written Text
		(v) The free water/cement ratio shall not be greater than 0.4, (vi) The minimum strength class shall be C32/40, and (vii) Alkali – silica reaction shall be controlled as specified in sub-clause 1704.5.
		Materials for Repairs Using Proprietary Repair Mortar
	5	(i) Pre-batched polymer modified cementitious mortars incorporating a shrinkage reduction agent shall be used, (ii) Mortars for hand screeding of surfaces to be waterproofed shall be sand/cement mortar containing styrene acrylate or styrene butadine polymer bonding admixture, (iii) The maximum aggregate grain size in the mortar shall be suitable for the depths of repair required, (iv) Water required to mix repair mortars shall be clean potable water, (vii) The maximum total chloride content expressed as % of chloride ion by mass of cement of the materials shall not exceed 0.3% and for repairs to prestressed or heat cured concrete shall not exceed 0.1%, Calcium chloride or admixtures containing chloride salts shall not be used, (viii) The minimum 28 day cube strength of the repair mortar shall be 40 N/mm^2, (ix) Alkali-silica reaction shall be controlled as specified in sub-clause 1704.5.
		Delivery and Storage of Material
	6	(i) The Operating Company shall provide and retain for each batch of the material delivered to the Site of the Operations Certificates furnished by the supplier stating: (a) the polymer used, (b) evidence that the total chloride content is less than specified in sub-clause 5 (vii) of this Specification, (c) the content of sodium oxide equivalent in the mortar, (d) maximum shelf life, (e) handling arrangements, (ii) The material shall be stored in a dry environment free from extremes of cold and heat and in accordance with any specific storage requirements of the manufacturer, (iii) The materials shall not be removed from store until immediately prior to mixing.

Clause No.		Title and Written Text
		Placing Repair Mortar
	7	(i) Repair mortar shall be built up in accordance with the manufacturer's written instructions, The surface of each layer except the final layer shall be scored to provide a key for the next layer, (ii) The repair mortar shall be suitable for the purpose intended i.e. for soffits or vertical surfaces as appropriate, (iii) Repair mortar shall not be applied when the temperature of the surface to be repaired falls below 5°C, (iv) The material shall be incorporated within 1 hour of mixing or such lesser period as stated in writing by the manufacturer, and (v) Repair mortar shall be cured in accordance with sub-clause 1710.5 and the manufacturer's written instructions. During the curing period air and surface temperatures shall be maintained at or above 5°C or in accordance with the manufacturers written instructions which may require artificial means if necessary.
		Surface Finish to Repair Mortar
	8	Repair mortar shall be float finished to produce a dense smooth uniform surface free from float marks to the specified line and level.
		Materials for Repairs Using Proprietary High-Flow Repair Concrete
	9	(i) Materials for proprietary high-flow repair concretes shall comply with the specification requirements in BS 8500-1:2006, (ii) Water shall be clean potable water, (iii) Aggregate shall be well graded with the maximum size not exceeding 8mm except when pumping is to be employed when the maximum size shall not exceed 6mm and shall comply with sub-clause 1702.2, (iv) Proprietary material shall be of such composition and grading that when mixed with water a flowable concrete is produced which shall flow freely into the confined spaces to be filled and shall not be prone to segregation bleeding or cracking in either the plastic or hardened stat, and (v) The minimum strength class shall be C32/40.
		Delivery and Storage of Material
	10	(i) Records shall be kept of each batch of material delivered to the Site of the Operations and shall include: (a) formulator's name and address, (b) formulator's agent's name and address where applicable, (c) material identification, (d) batch reference number size of batch and number of containers in the delivery,

Clause No.		Title and Written Text
		(e) date of manufacture, (f) evidence that the chloride contents are less than specified in table 17/1 of clause 1704, (g) details of the significant rock components contained in the aggregates, (h) cement content, (i) combinations and additions used, and (j) the equivalent sodium oxide content. (ii) Containers shall be damp proof and readily emptied of their contents, (iii) Containers shall be marked with the following information: (a) material identification, (b) batch reference number, (c) formulator's name, (d) net weight and lifting arrangements and storage specific requirements, (e) any warnings or precautions concerning the contents. (iv) The material shall be stored in a dry environment free from extremes of cold and heat, (v) Material shall not be older than three months or lesser period specified by the formulator when used in the Operations, (vi) The materials shall not be removed from the store for use in the Operations until immediately prior to mixing.
		Formwork Site Mixing Placing and Curing
	11	(i) Formwork shall be Class F4 to sub-clause 1708.4 with the perimeter of the repair well sealed to prevent grout loss, Release agents shall be compatible with proposed surface treatments, (ii) Mixing in a forced action paddle mixer and placing shall be carried out strictly in accordance with the formulator's written instructions.
		Approval Tests
	12	(i) Before Operations commence all properties of the proposed high-flow repair concrete shall be demonstrated by the Operating Company and the formulator's representative by carrying out the tests specified below in an UKAS accredited laboratory, Records shall be maintained of all tests in accordance with the procedures in the Management System,

Clause No.		Title and Written Text
		(ii) The composition of the high flow concrete including the source of water the mix proportions and the method of mixing shall be the same as that proposed for use in the Operations, The composition shall not be varied throughout the course of the tests and the material shall be obtained from the same batch, (iii) The tests fall into two categories flowability and compressive strength, (iv) The flowability tests shall demonstrate: (a) flow characteristics in a trough at 5°C and 20°C as specified in Note 1 of this sub-clause, (b) flow characteristics in a simulated soffit repair at 5°C and 20°C as specified in Note 2 of this sub-clause.
		Note 1: The flow characteristics of the concrete in a trough shall be assessed by the Operating Company. For each test the concrete and trough shall be at the specified temperature. The funnel of the apparatus shall be fitted with a rubber bung and charged with 6 litres of concrete. On release of the bung, the concrete shall flow along the trough and the length of the flow along the trough shall be measured. A test shall consist of three readings the flow requirements and shall be deemed to be satisfied if none of the readings are below 750mm in 30 seconds without signs of segregation or bleeding. Note 2: The flow characteristics of the concrete in a simulated soffit repair shall be tested in accordance with BD27 of the DMRB. For each test the concrete and apparatus shall be at the specified temperature. The concrete shall be poured in one operation into the supply tube until the level of the concrete has reached 100mm above the underside of the top plate. After the concrete has set, the specimen shall be removed from the apparatus and sawn into two parts and the sawn concrete surfaces shall be examined. The concrete shall be homogeneous free from excessive air holes voids segregation and other Defects and shall completely fill the simulated repair.
		Compressive Strength Tests
	13	(i) Compressive strength tests shall comply with conformity testing requirements in British Standard 8500-2, section 10, (ii) Compressive strength tests shall be carried out by the Operating Company to determine the compressive strength of the concrete at 5°C and 20°C,

Clause No.		Title and Written Text
		(iii) Test cubes shall be made in 100mm metal moulds to British Standard EN 12390, The moulds shall be carefully filled by pouring concrete through a funnel to produce void free specimens, There shall be no compaction, The cubes shall be cured and testing shall be carried out in accordance with the appropriate parts of British Standard EN 12390-2: 2000, (iv) The minimum compressive strength shall be established using a set of three cubes, The requirement shall be satisfied if none of the compressive strengths obtained are lower than the specified value and the difference between the highest and lowest values is not more than 20% of the average, and
		(v) Identity testing where required shall be carried out by the Operating Company in accordance with clause 1707.
		Batch Acceptance Tests
	14	Each batch of material delivered to the Site shall be tested by the Operating Company as follows: (i) the material shall be taken at random from one or more containers from the same batch, (ii) flow through tests shall be carried out as specified in Note 1 of sub-clause 12 of this clause at 20°C, and (iii) compressive strength tests shall be carried out as specified in sub-clause 13 of this clause at 20°C.
		Site Tests
	15	(i) Site tests shall be carried out by the Operating Company to monitor: (a) flowability, and (b) compressive strength. (ii) The flowability of a sample of fresh concrete shall be determined in a trough as specified in sub-clause 12, Note 1, (iii) The gain in strength of the repair concrete shall be monitored by the Operating Company by testing cubes cured alongside the repaired areas at ambient temperature, (iv) For each day's production of repair concrete, six 100mm cubes shall be made by the Operating Company in accordance with sub-clause 13 of this clause, The cubes shall be cured for 24 hours in the moulds with the top surfaces covered by polythene sheets. After 24 hours the cubes shall be stripped and placed in polythene bags which shall be sealed.

Clause No.		Title and Written Text	
		The cubes shall continue to be stored alongside the repaired areas throughout the curing period until required for testing. The cubes shall be crushed at times determined by the Operating Company but at least 2 cubes shall be retained to be tested at 28 days.	
		Materials for Repairs Using Proprietary Sprayed Concrete	
	16	(i) The proprietary material shall be pre-weighed and pre-mixed at a location off the Site, (ii) Cement shall comply with sub-clause 1702.1, (iii) Alkali-silica reaction shall be controlled as specified in clause 1704, (iv) The total chloride content of the materials shall be expressed as % of chloride ion by weight of cement and shall not exceed 0.3% except in the case of prestressed or heat cured concrete where the maximum shall not exceed 0.1%,	
		Any additional chloride or admixtures containing chloride salts shall not be used, (v) Aggregate shall be well graded with the maximum size not exceeding 3mm and shall comply with sub-clause 1702.2, (vii) Material shall be capable of being applied to a thickness of 100mm without the requirement for additional mesh reinforcement or fibres, and (vii) Once placed the material shall be capable of being profiled and trowel finished (to the equivalent of formed Class F2) without detrimental effects.	
		Performance Characteristics	
	17	The proprietary material shall have performance characteristics as detailed in Table 17/71 which shall be verified by an independent testing authority employed by the Operating Company.	
		TABLE 17/71: Performance Characteristics	
		TEST	**PERFORMANCE**
		Bond Strength to British Standard EN 1542	greater than 1.0 N/mm^2
		Characteristic strength of cores (28 days) to British Standard EN 12504-1	40 N/mm^2
		Tensile splitting strength (28 days) to British Standard EN 12390-6	greater than 2.4 N/mm^2
		Static Modulus of elasticity to British Standard EN 13412	27000 ± 3000 N/mm^2
		Shrinkage to British Standard EN 12617-4	less than 0.002%
		Coefficient of Thermal Expansion to British Standard EN 1770	8 to 12 x 10-6/°C

Clause No.		Title and Written Text	
		Coefficient of Chloride Ion Diffusion to British Standard EN 13396	To be agreed with the Overseeing Organisation
		Delivery and Storage of Material	
	18	(i) Records shall be kept of each batch of material delivered to the Site and shall include: (a) formulator's name and address, (b) formulator's agent's name and address where applicable, (c) batch reference number size of batch and number of containers in the delivery, (d) date of manufacture, (e) evidence that the chloride contents are less than specified in sub-clause 16 (iv) of this clause, (f) details of the significant rock components contained in the aggregates,	
		(g) cement content, and (h) additives used. (ii) The sodium oxide equivalent content, (iii) Containers shall be damp proof and readily emptied of their contents, (iv) Containers shall be marked with the following information: (a) material identification, (b) batch reference number, (c) formulator's name, (d) net weight, and (e) any warnings or precautions concerning the contents The material shall be stored in a dry environment free from extremes of cold and heat. Material shall not be older than 3 months or lesser period specified by the formulator when incorporated in the Works. The materials shall not be removed from the store for use in the Works until immediately prior to mixing.	
		Trial Mixes	
	19	Practical tests shall be carried out on the Site by constructing test panels to confirm the suitability of the mix for the Works. In these tests the type of equipment used for mixing and placing and the finished face to the panel shall be similar in all respects to those intended for use in the Works.	
		Procedure Trials	

Clause No.		Title and Written Text
	20	(i) Before work commences on the Operations, procedure trials shall be carried out to pre-qualify the nozzlemen proposed for use on the Site, Nozzlemen who have not been pre-qualified shall not be permitted to apply sprayed concrete on the Operations, (ii) Each nozzleman shall carry out procedure trial panels, The procedure trial panels shall have minimum dimensions of 750mm x 750mm x 100mm deep and shall be made of plywood with 45º sloped edge to permit rebound to escape, (iii) One half of each procedure trial panel shall contain reinforcement representative of the size and spacing of the work, The second half of the procedure trial panel shall contain no reinforcement (with the exception of fibre reinforcement) to allow for the extraction of cores for testing in accordance with sub-clause 29(ii) of this clause, (iv) One procedure trial panel shall be carried out by each nozzleman proposed for use on the Site using each proposed mixture proportion at each proposed orientation i.e. horizontally overhead or other such orientations,
		(v) A minimum of three 100mm diameter cores shall be extracted from the location of intersecting reinforcing steel to check the adequacy of consolidation of the sprayed concrete around the reinforcement. A nozzleman shall not be prequalified if the cores from his trial panel show inadequate consolidation, and (vi) No sprayed concrete shall be carried out on the Site until the procedure trial testing requirements shall have been met.
		Surface Preparation for Sprayed Concrete
	21	(i) Sound surfaces which are to receive sprayed concrete shall be thoroughly cleaned and roughened by grit blasting or high pressure water jetting, (ii) All concrete surfaces to receive sprayed concrete, exposed by percussive methods using hand or mechanical tools, shall be prepared by low vibration processes, such as grit blasting or high pressure water jetting, to remove all fractured aggregate particles and expose a sound substrate, (iii) Grit blasted areas shall have sprayed concrete applied within 48 hours or shall be re-blasted, and (iv) Immediately prior to spray concreting all the surfaces to be sprayed shall be thoroughly cleaned and wetted with a strong blast of oil-free air and water.
		Outline Definition
	22	(i) The outline of the finished sprayed concrete shall be defined by screed boards, guide wires or other means proposed by the

Clause No.		Title and Written Text
		Operating Company and consented to in writing by the Overseeing Organisation, and (ii) Guide wires shall be installed tight and true to line and in such a manner that they may be easily tightened.
		Mixing Sprayed Concrete
	23	(i) Sprayed concrete shall be mixed in a batch type mixer complying with the requirements of BS 1305 except that the water shall be delivered direct to the nozzle, The delivery equipment shall be capable of delivering a continuous even stream of uniformly mixed material to the nozzle, Water supply at the nozzle shall be maintained at a uniform pressure sufficient to ensure adequate hydration at all times, The delivery equipment and nozzle shall be thoroughly cleaned and inspected at the end of each day and parts replaced as required, (ii) The temperature of water and cement when added to the mix shall not exceed 60°C and 65°C respectively, and (iii) Water used in sprayed concrete shall be clean potable water.
		Reinforcement
	24	Welded wire mesh fabric reinforcement shall be fixed to prepared surfaces and shall be carefully bent to follow the shape of the members and held in position by anchors spaced at not less than 2 per m^2. The fabric shall be spaced at not less than 25mm from the finished surface of the concrete.
		Transport and Placing Sprayed Concrete
	25	(i) No concrete shall be sprayed in air temperatures less than 5°C or onto a surface temperature less than 5°C, Surfaces shall be free from standing water, (ii) Sprayed concrete shall emerge from the nozzle in a steady uninterrupted flow and an uninterrupted supply of compressed air shall be provided to maintain adequate nozzle velocity, Should the flow become intermittent the nozzle shall be directed away from the work until the flow again becomes uniform, (iii) Sprayed concrete shall be applied under sufficient pressure so as to give a dense and homogeneous covering to the surface in one or more layers of a thickness compatible with the mix design constituents, position of reinforcement and plane of application to ensure the placed concrete does not slump or sag, (iv) Adequate precautions shall be taken to ensure that sprayed concrete rebound shall not be incorporated in the finished work and that any previously deposited hardened rebound which may prevent a proper bond or encasement shall be removed from reinforcement,

Clause No.		Title and Written Text
		(v) Adequate protection shall be given to the nozzle and application surface during high winds, and (vi) The final coat shall be hand screeded to a Class U3 finish in accordance with sub-clause 1708.4.
		Fibre Reinforced Sprayed Concrete
	26	(i) The weight of steel or composite fibres shall not exceed 5% by weight of the combined weight of cement and aggregate, (ii) Fibres shall be added to the mix in such a manner that the fibres shall be evenly distributed and not bent, (iii) Procedure trials shall be undertaken to demonstrate that the proposed methods can achieve the requirements of this sub-clause, (iv) Unless otherwise stated elsewhere in this Contract, a final 15mm thick coat of unreinforced sprayed concrete shall be applied over the whole exposed surface to cover exposed fibres, and (v) The gun and nozzle shall be electrically earthed.
		Construction Joints
	27	(i) Construction joints in sprayed concrete shall be tapered at approximately 30 degrees or cut back square to the reinforcement and then tapered at 30 degrees, and (ii) The construction joint shall be thoroughly cleaned and all laitance and loose material removed and the surface wetted using a strong blast of air and water prior to the placement of adjacent sprayed concrete.
		Curing of Sprayed Concrete
	28	(i) Freshly sprayed concrete shall be protected from rain or water until the surface is sufficiently hard to resist damage, (ii) Immediately after placing and for 14 days thereafter, sprayed concrete shall be protected against harmful effects of weather including rain rapid temperature changes and frost and from drying out, (iii) Curing membranes shall not be used, and (iv) Impregnation in accordance with clause 1709 may be carried out after 14 days.
		Production Testing of Sprayed Concrete
	29	(i) One production test panel shall be carried out for each nozzle orientation for each day of sprayed concrete production or every 15m^3 of sprayed concrete whichever is the lesser, (ii) Sprayed concrete production test panels shall be made with dimensions 450mm x 450mm x 100mm thick with 45º sloped edge forms to permit escape of rebound,

Clause No.		Title and Written Text
		(iii) Production test panels shall contain no reinforcement (other than fibre reinforcement), (iv) The production test panels shall be marked, cured, cored and tested in compression in accordance with the appropriate parts of British Standard EN 12390, (v) They shall be tested in a United Kingdom Accreditation Service (UKAS) accredited laboratory. Records shall be maintained of all tests, and (vi) Routine tests shall be carried out by the Operating Company on the finished sprayed concrete. These routine tests shall consist of taking 25mm or 100mm diameter cores from the finished sprayed concrete, tested in the same manner as cores taken from the test panels or by carrying out non-destructive tests by means of a 'Schmidt' hammer or 'Windsor Probe' or other approved test to determine compressive strength and testing for bond by the use of a hand hammer.
		Resin Injection Repairs
	30	(i) The concrete surface at least 50mm either side of the crack shall be dry blast cleaned to a sound surface free from dirt moss salt staining and loose concrete, The full extent of the crack shall be found and the cleaned area shall extend 50mm beyond the end of the crack or until the crack becomes too narrow to warrant resin injection, and (ii) Where algae or other bacterial growth emanates from the crack it shall be removed by scrubbing with bactericide and rinsing with clean water, Health and safety precautions appropriate to the bactericide cleaning agent used shall be adopted including those recommended in writing by the manufacturers. Measures shall be taken to ensure that any adjacent water course shall not be contaminated and that run-off shall be collected and disposed of in a safe manner.
	31	(i) Where excess moisture is evident in the crack to be resin injected the crack shall be blown through with dry hot air starting at the top of the crack, A temporary crack sealant shall be applied immediately after blowing through and the resin shall be injected into the crack immediately the necessary preparations are complete, (ii) If, for whatever reason, the crack becomes damp before it is resin injected no further work shall be permitted until the temporary crack sealant is removed and the crack blown through again with dry hot air, and (iii) The temperature of the hot air shall be sufficient to dry the full depth of the crack and shall not exceed the maximum temperature specified by the equipment manufacturer.

Clause No.		Title and Written Text
	32	(i) The resin to be used shall be either polyester or epoxy based and shall be mixed and injected in accordance with the manufacturer's written specification, Resin shall not be injected when the air temperature or the surface temperature concrete to be repaired is less than 5°C, (ii) The spacing of the nozzle positions shall be equal to the depth of the crack and shall not, in any case, be less than 250mm, (iii) Injecting shall start at the bottom of the crack and work shall proceed upwards in a continuous operation throughout, Resin shall be seen extruding from the crack at the next nozzle position before the current nozzle location is locked off, (iv) The injected crack shall be left undisturbed for a period of at least 24 hours to allow the resin to harden, and (v) When the resins are sufficiently cured, the cracks and any resin spillages shall be cleaned from the face of the concrete.
	33	When the resin has set, two 20mm diameter proving cores shall be taken to the full depth of the crack. The resulting holes shall be filled with either the resin used for injecting or with a suitable filler of a compatible thixotropic resin.
		Sealing of Cracks in Concrete Bridge Decks
	34	The preparation of surfaces around cracks and the measures to deal with algae or other growth in cracks shall be as described in sub-clause 30 of this clause.
	35	(i) The sealing resin shall be a low viscosity, polyester epoxy or acrylic polymer which shall be compatible with any proposed waterproofing system, (ii) The material shall be applied by pouring through a fine nozzle directly into the crack or into preformed dams, (iii) The injected crack shall be left undisturbed for a period of at least 24 hours to allow the resin to harden, and (iv) When the resins are sufficiently cured the cracks and resin spillages shall be cleaned to the face of the concrete.
1775AR		**Foamed Concrete Fill to Structures and Backfilling to Drainage Trenches**
	1	Foamed concrete fill to arches or bridge decks shall be of density 1400 – 1600 kg/m^3. Minimum cement content shall be 350 kg/m^3. The maximum free-water/cement ratio shall be 0.4. The minimum cube compressive strength shall be 8 N/mm^2.
	2	Foamed concrete fill to drainage trenches shall comply with sub-clause 1 of this clause.

Clause No.		Title and Written Text
1870AR		**Repairs to Existing Steelwork and Welds**
	1	The Operating Company shall develop repair procedures for the repair of all Defects in steel plates and welds. The repair procedures shall be compatible with the grade and properties of the steel plate or sections. Repair procedures shall be submitted to the Overseeing Organisation for consent.
2070AR		**Replacement of Bridge Deck Waterproofing on Concrete Decks**
		Removal of Existing Waterproofing
	1	The existing surfacing shall be removed by cold-milling (planing) in accordance with clause 709 except in the case of small areas which may be removed using other suitable methods.
	2	The existing bridge deck waterproofing or protective layer comprising the last 30mm above the concrete substrate shall be carefully removed by other means to avoid damage to the concrete. Method statements for the removal of existing waterproofing shall be submitted by the Operating Company for the written consent of the Overseeing Organisation before the proposed techniques shall be used.
	3	The final removal of the remaining waterproofing or primer to expose the concrete substrate shall be by recoverable abrasive blast cleaning systems. 'Open' blast cleaning shall not be permitted except on vertical surfaces or intricate details.
		Inspection and Testing
	4	Prior to application of the new waterproofing, the deck concrete shall be examined by the Operating Company to determine the following: (i) if any testing is required (in accordance with the requirements of Appendix 33/1), (ii) if additional deck preparation is required, and (iii) if structural concrete repairs are required (in accordance with the requirements of Series 1700).
		Additional Preparation of Bridge Deck
	5	Additional preparation of bridge decks prior to the application of the new waterproofing shall be the following: (i) removal of surface Defects such as screed marks and footprints, (ii) removal of formwork and falsework anchors from the original construction which have inadequate cover, (iii) sealing of cracks greater than 0.25mm, and (iv) repairs to or forming of fillets and chases to facilitate waterproofing.
	6	Any work required in addition to the items listed above, such as removal of chloride contaminated concrete or delaminated concrete and concrete repairs considered necessary by the Operating Company, shall be deemed to be structural concrete repairs and shall be undertaken in accordance with Series 1700.

Clause No.		Title and Written Text
		Replacement of Bridge Deck Waterproofing
	7	The replacement waterproofing system shall be in accordance with clauses 2008 and shall comply with the requirements of clauses 2002, 2003, 2005 & 2007 and any additional requirements described in Appendix 20/1.
2071AR		**Replacement of Bridge Deck Waterproofing on Steel Decks**
		Removal of Existing Waterproofing
	1	The existing surfacing, waterproofing and any primer shall be removed and the zinc metal coating prepared to 'sound metal coating' by blast cleaning or 'bright metal coating' by abrading in accordance with Clause 5004. The method of removing the existing waterproofing shall avoid damage to the steel deck plate and where necessary procedure trials shall be undertaken to confirm that the proposed method will not result in damage to the deck plate. In areas where the existing zinc coating has broken down the areas of steel shall be prepared to 'clean steel' by blast cleaning or 'bright steel' by abrading in accordance with Clause 5004. To facilitate testing of the deck plate and welds the zinc spray shall be removed and the deck prepared to 'clean steel' by blast cleaning or 'bright steel' by abrading in accordance with Clause 5004.
		Inspection and Testing
	2	Prior to application of the new waterproofing, the deck plate and welds shall be visually examined by the Operating Company and the Operating Company shall carry out non destructive testing of the deck plate and welds using magnetic particle inspection techniques using the methods recommended in British Standard EN ISO 9934.
	3	Where Defects are identified they shall be repaired in accordance with Appendix 18/70.
	4	The steel surface profile required shall be determined by the requirements of the proposed waterproofing system.
		Replacement of Bridge Deck Waterproofing
	5	A zinc rich blast primer shall then be applied to the steel deck. The blast primer shall be either selected from Table 50/1 of Series 5000 or a proprietary zinc rich blast primer developed for use with the proposed waterproofing system. In either case the Operating Company shall ensure that the primer is compatible with waterproofing system and shall prevent any corrosion of the deck plate prior to waterproofing. Adhesion testing shall be undertaken in accordance with the requirements of clause 2007.
	6	The replacement waterproofing system shall be in accordance with clauses 2008 and shall comply with the requirements of clauses 2002, 2003, 2005 & 2007 and any additional requirements described in

Clause No.		Title and Written Text
		Appendix 20/1.
	7	The waterproofing system shall be applied in accordance with the manufacturer's instructions with such primers, bond coats and the like as may be required.
	8	In addition to the waterproofing membrane a 1mm thick 'shear key' membrane of contrasting colour, containing dust free 3mm aggregate (Flintag or equivalent) shall be applied. While the 2nd coat of membrane is still wet and within 5 minutes of its application, the aggregate shall be broadcast onto the membrane in such a manner so as to allow the aggregate to fall vertically, at an application rate of 0.5kg/m^2. When the membrane has cured any aggregate not retained in the membrane shall be removed prior to application of the tack coat.
	9	The waterproofing membrane shall be tested in accordance with clause 2007 and made good as required prior to application of the shear key layer.
	10	Prior to surfacing a separate hot melt tack coat as recommended by the waterproofing manufacturer to be compatible with the surfacing shall be applied.
	11	All components of the waterproofing system shall be suitable for the levels of environmental exposure that will be encountered in permanently exposed locations.
	12	The Operating Company shall have special regard for the limitations of the waterproofing system in terms of its application at low temperatures and ensuring inter-coat adhesion is not compromised by delay between applications of different components of the system. The Operating Company shall strictly follow the requirements of the manufacturer in all aspects of the application of the waterproofing system.
	13	All components of the system shall be provided by one supplier who shall operate a Quality System registered to ISO 9001:2000.
	14	Only persons trained and authorised by the supplier of the waterproofing system may install the waterproofing system.
2072AR		**Repairs to Existing Waterproofing on Concrete Decks**
	1	Repairs shall be carried out to the existing waterproofing only where the existing system has a current British Board of Accreditation -Roads and Bridges Agrément certificate showing compliance with the requirements of BD47 of the DMRB 'Waterproofing and Surfacing of Concrete Bridge Decks' or for other spray applied waterproofing with the written consent of the Overseeing Organisation. Repairs shall be carried out using systems compliant with BD47 of the DMRB and compatible with the system to be repaired.

Clause No.		Title and Written Text
		The waterproofing shall be applied in accordance with the method statement included with the Agrément certificate for the particular system. All waterproofing repairs shall be carried out in accordance with Clause 2070AR. Where the existing waterproofing shall be a spray applied system for repair areas of less than 2m2 at any one location a hand-applied system equivalent to and compatible with the existing may be used subject to the written consent of the Overseeing Organisation. The repair areas within the carriageway width shall have a protective layer incorporated into the waterproofing system in accordance with sub-Clause 2003.4.
2370AR		**Bridge Expansion Joints Used on Bridge Decks**
	1	The following types of bridge expansion joints are known to occur on the Trunk Road network. Type — Description 1 — Buried joint under continuous surfacing 2 — Asphaltic plug joint 3 — Nosing joint with poured sealant 4 — Nosing with preformed compression seal 5 — Reinforced Elastomeric 6 — Elastomeric in metal runners 7 — Maurer D80 This list is not exhaustive and reference shall be made to BA26 and BD33 of the DMRB for all possible types that may be encountered.
		A description of deck joint types and deck joint manufacturers' details shall be as provided in the structures management function of the Integrated Roads Information System for individual Structures where these are known.
2371AR		**Replacement of Bridge Deck Expansion Joints and Gap Sealants**
	1	Replacement repair and alterations to expansion joints shall comply with the requirements of clauses 2301 to 2304 and Standards BD33/94 and BA26/94 of the DMRB.
	2	Joints shall be installed in accordance with the manufacturer's written instructions. Work may comprise replacement of a complete joint or maintenance of a joint where complete or partial replacement is not considered necessary.

Clause No.		Title and Written Text
	3	Existing joints (including transition strips) shall be carefully broken out or unbolted and removed. The adjacent carriageway hardshoulder, hardened verges and central reservations shall be saw cut to provide neat vertical edges. The location of any existing services or ducts shall be determined prior to breaking out or saw cutting and measures shall be taken to protect them.
	4	Existing flashings and sealants shall be removed. Where appropriate, existing intact waterbars may be retained. Existing galvanised plates in buried joints shall be set aside for possible re-use.
	5	The existing surfacing and additional protective layer adjacent to the expansion joint shall be removed to expose the waterproofing membrane. The waterproofing shall be carefully cut back to expose the concrete surface which shall be prepared to receive the expansion joint system.
	6	Continuity of the waterproofing membrane shall be provided by bond or lap between the waterproof membrane and the expansion joint.
	7	Existing holding down bolts and fixings shall be protected, if required, for installation of the proposed replacement joint. If such bolts and fixings are not required they shall be removed or ground flush with the surface of the deck concrete.
	8	The concrete substrate shall be examined by the Operating Company for Defects. Where required, testing shall be carried out and concrete repairs undertaken in accordance with Series 1700 and this Appendix 0/1.
	9	If the joint is not completely replaced, material and components shall form the same system as the existing joint, where possible.
	10	Where required vertical drain holes shall be installed adjacent to expansion joints. The drain holes shall comprise a down pipe fixed into holes cored through the superstructure of minimum internal diameter 40mm and a conical entry funnel with cap to allow water to enter the funnel but prevent blocking of the waterway by the surfacing. The cap and funnel shall be covered with a sheet of permeable membrane prior to surfacing.
	11	Where gap sealant shall be replaced, the existing sealant and deteriorated joint filler shall be raked out to leave clean surfaces. Where possible, new joint filler to replace that removed shall be installed prior to re-sealing the gap. Where it is not possible to replace joint filler the joint shall still be sealed.
2372AR		**Asphaltic Plug Joints**
		Installation

Clause No.		Title and Written Text
	1	All joints shall have a valid approval/registration in accordance with Appendix E of the Specification.
	2	The joints shall be installed in accordance with the manufacturer's written instructions. These written instructions shall comply with the terms of the approval/ registration.
	3	All batches of materials delivered to the Site shall have a Certificate of compliance stating: (i) The binder compound and its properties including Penetration Value Softening Point (Ring and Ball) and Flow Resistance, (ii) The specific type and density of aggregate/stone used in the asphaltic plug matrix, and (iii) The quantities and weights of binder and aggregate used at each joint location.
2470AR		**Repointing of Brickwork Blockwork and Stonework**
	1	Masonry joints in brickwork and blockwork to be repointed shall be ground out to a depth of 25mm to give adequate key. For natural stone masonry and historic structures, power tools shall not be used. All unsound mortar at a greater depth than 25mm shall be removed until sound mortar is encountered. Apparatus used for grinding out shall be fitted with a depth gauge to allow control of rake out depth.
	2	All detritus shall be removed by low pressure water jetting. Repointing shall be carried out by trowel or purpose made repointing keys or by using injection techniques.
	3	Cement mortar designation shall be selected based on clause 2404 and 2417 and Table 24/5. Lime mortar designation shall be selected based on clause 2476AR Table 24/7, Table 24/8 and Table 24/9. Water for mortars shall be clean and free from impurities.
	4	The specification of mortars used in the repair of masonry construction shall be prepared with reference to the existing mortar in the remaining construction and appropriate adjustment shall be made to take account of existing conditions and availability of materials.
	5	For historic brick Structures and all stone masonry Structures, the mortar specification shall be prepared by the Operating Company in conjunction with specialist advice based on mortar analysis and evaluation carried out on the mortar samples from the existing construction.
	6	Lime mortar is extensively used in the construction of masonry road Structures. Mortars used for repairs and repointing shall match the appearance and characteristics of existing materials as closely as possible.

Clause No.		Title and Written Text
	7	The choice of lime mortar to be used shall be influenced by the nature of stone, the nature of any surviving lime based materials and the environmental conditions or exposure of the Site.
	8	Samples of mortar pointing at locations shall be provided for reference and comparison for the duration of the work. Mortar for pointing shall match the standards and details of the samples.
	9	Adequate protection of repair work and pointing from sun, wind, rain and frost shall be provided until cured.
	10	For historic Structures, power tools shall not be used to remove mortars. Damage to stonework shall be avoided.
	11	If any significant voids are present the Operating Company shall where necessary wedge and pin up loose stones.
	12	In deep cavities, work shall be carried out in layers of not more than 35mm allowing the material to dry before placing the next layer. A period of 24 hours shall elapse between each layer.
	13	Deep voids shall be filled to within 35mm or twice the width of the joint back from the finished wall face to allow sufficient depth for pointing.
2471AR		**Replacement of Precast Concrete Copings**
	1	Broken precast concrete copings shall be removed together with the old mortar bed and any loose and friable mortar in the joints below the coping.
	2	New precast concrete copings shall be laid on a mortar designation (i) (refer to clause 2404) bed to a line and level to match existing copings.
2472AR		**Rebedding Existing Precast Concrete or Stone Masonry Copings**
	1	Precast concrete or stone masonry copings shall be removed and stored for re-use.
	2	The existing mortar bed shall be completely removed together with any loose and friable mortar joints below the coping.
	3	Copings shall be relaid on mortar designation (i) (refer to clause 2404) or where wall construction contains lime mortar to clause 2476AR. Rebedding of existing precast concrete or stone masonry copings shall match existing line and level.
2473AR		**Replacement Tiling**
	1	All damaged and defective tiles, adhesive, mortar, loose concrete and grout shall be broken out.
	2	Replacement tiles shall be in accordance with BS 5385-1 for wall and floor tiling.
	3	Any areas of the underlying concrete surface which have been damaged shall be made good as detailed in Series 1700.
	4	Repair materials shall be compatible with the tile adhesive to be used.
	5	The edges of retained existing tiles shall be clean and free of any grout.

Clause No.		Title and Written Text
	6	Unless otherwise determined by the Operating Company in accordance with other provisions of this Contract, replacement tiles shall be glazed ceramic of a colour size and pattern to match existing tiles.
	7	Tiles shall be installed to a line and level to match existing tiling with the joints grouted to match the existing grout colour and pattern.
	8	New tiling shall be cleaned of excess grout when the grout to the joints has hardened.
	9	Where a mural or other new tile pattern is to replace an existing, the Operating Company shall produce drawings for approval by the Overseeing Organisation prior to construction.
2474AR		**Rebuilding of Defective Masonry**
	1	Bricks, concrete blocks and stones designated for reuse in the repairs or reconstruction of existing masonry including bridge parapets shall be taken down and set aside for reuse or removed for storage.
	2	Where parapets have been damaged, the Operating Company shall retrieve displaced bricks, blocks and stones from their position after displacement. This may include recovery from watercourses and rail tracks.
	3	The Operating Company shall consult the appropriate bodies to obtain agreement on access and method of working for retrieval and rebuilding.
	4	For Structures which are scheduled ancient monuments approvals shall be obtained from Historic Scotland.
	5	For Structures which are historic listed approvals shall be obtained from the appropriate local authority.
	6	The Operating Company shall set up lines of communication and processes to enable timescales for rebuilding to be achieved.
	7	The Operating Company shall include in its procedure for approval by Historic Scotland the following steps to ensure early consent: (i) Inform Historic Scotland Ancient Monument Division of damage to a scheduled ancient monument structure and apply for scheduled monument consent for repair work with cost estimates using new stone and sketch drawings of proposed repairs. Record photos of damaged areas shall be submitted to Historic Scotland Ancient Monument Division at this time. (ii) Carry out assessment of retrieval of stones from river beds and the like and notify Historic Scotland of outcome. (iii) Send stone samples to British Geological Survey for best matching replacement stones. Copy report to Historic Scotland. (iv) Meet Historic Scotland on Site with draft proposals for repair. (v) Agree final repair Scheme and submit all information to Historic Scotland for final comment. (vi) Historic Scotland issue Scheduled Monument Consent.

Clause No.		Title and Written Text
	9	The Operating Company shall include in its procedures for the liaison and approval by local authorities any proposals for repairs and any repair work or alterations required due to damage to historic listed Structures other than scheduled ancient monuments which shall be covered by sub-clause 4 of this clause.
	10	All mortar from the faces of the bricks, concrete blocks or stone shall be removed before incorporating them into the reconstructed work.
	11	Recovered bricks, blocks and stones from watercourses and other situations where the surfaces have been discoloured or contaminated shall be cleaned and allowed to dry before incorporating into the reconstructed work.
	12	Where new replacement parapet stones are required for listed / ancient monument Structures, they shall be of matching stone based on British Geological Survey's analysis of stone samples from the relevant Structure.
	13	New materials to be incorporated into existing brick, concrete block or stone masonry construction shall match the remaining construction with regard to appearance and physical characteristics.
2475AR		**Lime Putty**
	1	Lime putty shall be traditional non-hydraulic slaked lime putty to comply with British Standard EN 459-1 with a density of not less than 1.35kg/ltr.
	2	Water for mortars shall be clean and free from impurities which would adversely affect the mortar.
2476AR		**Hydraulic Lime Mortars**
	1	Hydraulic lime for preparation of lime mortars to be used for building, rebuilding, grouting, mechanical pointing and hand pointing shall be Natural Hydraulic Lime NHL5 (eminently hydraulic) or Natural Hydraulic Lime NHL3.5 (moderately hydraulic) or Natural Hydraulic Lime NHL2 (feebly hydraulic) and shall conform to BS EN 459-1. Non-hydraulic lime shall conform to British Standard EN 459-1.
	2	Proportions of hydraulic lime to sand shall be based on Table 24/7 according to the required mortar Durability Designation as defined in British Standard 5628 *Code of Practice for Use of Masonry* and as specified in Appendix 24/1.

Clause No.		Title and Written Text

TABLE 24/7 Typical Hydraulic Lime Mortar Proportions by Volume

Constituents	Mix Reference/Durability Designation										
	M1 10	M2 9	M3 8	M4 7	M5 6	M6 5	M7 4	M8 3	M9 2	G1* 5-6	G2* 2-4
NHL5 Eminently Hydraulic	1	1	1							3	2
NHL3.5 Moderately Hydraulic				1	1	1					
NHL2 Feebly Hydraulic							1	1	1		
Lime Putty										1	1
Brick Powder (Reactive)/ Pozzolanic additive		½		½		½	½				
Well Graded Sharp Sand	1½	1½	2	1½	2	2½	1½	2	2	10	9
Soft Sand	½	½	½	½	1	1	½		½		
Porous Limestone or Brick Aggregate		½**	½	½**		½**	½**	1	1½		
Lime Mortar Mix Proportions by Volume	1:2	1:2 ½	1:3	1:2 ½	1:3	1:4	1:2 ½	1:3	1:4	3:1 :10	2:1 :9

*Gauged mixes G1 and G2 comprise Natural Hydraulic Lime NHL5: Lime Putty: Sand

** Porous Limestone aggregate may be substituted for equivalent amount of soft sand to achieve the specified lime mix proportions.

	3	Hydraulic lime Mortar shall be mixed as described below unless otherwise described in Appendix 24/1.
	4	Mortar shall be mixed thoroughly by hand or mechanically until its colour and consistency are uniform. The constituent materials shall be accurately measured. Mortar shall be made in small quantities only as and when required for the Operations. Mortar which has begun to set or has been mixed for a period of more than 2 hours shall be discarded.

Clause No.		Title and Written Text
		Hydraulic lime shall be delivered to Site in sealed paper bags stored in dry conditions and used within 24 weeks of manufacture. Brick powder in fine particle (<100 microns) reacts with free lime to form a pozzolan which improves frost resistance. Care is needed as if used at too high a proportion it can increase porosity and reduce flexibility. Introducing porous limestone or brick to the lime mortar mix will assist carbonation and frost resistance. Grading shall be similar to that for sharp sand. Pre-soaking prior to mixing will also help act as a retarder.
		Hydraulic Lime: Sand Mortars
	5	Hydraulic lime mortars may be provided as pre-mixed dry lime/sand mixes - either bagged or silo mixes or they may be site-mixed from bagged hydraulic lime and sand.
	6	Hydraulic lime mortars shall be used for the construction of masonry arch bridges which require a degree of flexibility to function structurally as arches. Hydraulic lime mortars shall be used for repair of masonry arch bridges that were constructed using hydraulic lime mortars.
	7	All hydraulic lime mortars shall be mixed in accordance with the supplier's written instructions.
	8	Hydraulic lime mortar shall be in accordance with the durability classification required (refer to Table 24/8).

Clause No.		Title and Written Text

TABLE 24/8 Durability Class Requirements for Straight Hydraulic Lime Mortars

Mortar Durability Designation (with approximate compressive strengths) for General use building mortar & General use mechanical or hand pointing mortar			
Masonry Type	Parapet & copings Masonry facing roadsides subject to spray & de-icing salts	Other parapets, abutments & spandrel walls Above flood level	Soffit to arch barrel Above flood level
Dense impermeable masonry. Squared or random. Brick, Basalt, Granite etc. (No Suction)	9 – 10 2.2 N/mm^2	7 – 8 1.8 N/mm^2	5 – 6 1.5 N/mm^2
Medium permeability masonry. Squared or random. Brick, Blockwork, Reconstructed stone, Sandstone, Limestone and mixed quality field stone masonry. (Moderate Suction)	7 – 8 1.8 N/mm^2	5 – 6 1.5 N/mm^2	3 – 4 1.34 N/mm^2
High permeability masonry. Squared or random. Brick, Blockwork, Reconstructed stone, Sandstone, Limestone and poor quality mixed field stone masonry. (High Suction)	5 – 6 1.5 N/mm^2	3 – 4 1.34 N/mm^2	2 – 4 1.34 N/mm^2

Clause No.		Title and Written Text
	10	Lime mortars suitable for use below flood level, depending on time required, are mortar designation 9–10 which shall be suitable for immersion within 24 hours or mortar designation 7–8 if a coffer dam shall be provided to allow 72 hours for setting.
	11	Site-mixed hydraulic lime mortars are sufficiently workable for laying and building stone masonry units but shall be generally not initially workable for laying bricks in a modern context without being banked up for several hours and reworked. Site-mixed hydraulic lime mortars shall be generally not suitable for pumping without the use of air entraining additives. Where required for site-mixed mortars, an air entrainer can be used to increase workability and minimise water requirement. Air entrainers shall be used in accordance with the manufacturer's written instructions. Pre-mixed dry bagged or silo mixes generally have a higher entrained air content than site-mixed mortars and shall be suitable for building, pumping and pointing without the need for additional air entrainers. The use of air entraining additives provides mortars of the same Durability Class which shall generally have superior performance characteristics in respect of earlier resistance to freeze/thaw action, faster rate of carbonation, better vapour permeability, and lower capillarity, due to their higher air content and reduced water demand.
		Gauged Hydraulic Lime: Sand Mortars
	12	Gauged hydraulic lime mortars shall only be used where this is necessary to match existing mortars in repointing work. There shall be no requirement for significant structural strength in re-pointing work. Gauged Hydraulic lime mortar shall be in accordance with the durability classification required (Refer to Table 24/9).

Clause No.		Title and Written Text

TABLE 24/9 Durability Class Requirements for Gauged Hydraulic Lime Mortars

Mortar Durability Designation (with approximate compressive strengths) for Non-general use hand pointing mortar			
Masonry Type	Parapet & copings Masonry facing roadsides subject to spray & de-icing salts	Other parapets, abutments & spandrel walls Above flood level	Soffit to arch barrel Above flood level
Dense impermeable masonry. Squared or random. Brick, Basalt and Granite (No Suction)	N/A	N/A	5 – 6 1.5 N/mm^2
Medium permeability masonry. Squared or random. Brick, Blockwork, Reconstructed stone Sandstone, Limestone and mixed quality field stone masonry. (Moderate Suction)	N/A 1.8 N/mm^2	5 – 6 1.5 N/mm^2	2 – 4
High permeability masonry. Squared or random. Brick, Blockwork, Reconstructed stone Sandstone, Limestone and poor quality mixed field stone masonry. (High Suction)	5 – 6 1.5 N/mm^2	3– 4 1.34 N/mm^2	1.34 N/mm^2
When work is planned to continue beyond the autumn raise the durability class by at least 1 where the background masonry permits. Where the background masonry does not permit, plan to commence in the early spring and be complete before the end of summer.			

Clause No.		Title and Written Text
	13	Gauged hydraulic lime mortars exhibit slower rates of carbonation and higher capillarity than straight hydraulic lime mortars and shall not be used in close proximity to wet areas or in areas subject to road spray.
	14	Air entrainers shall not be added to gauged hydraulic lime mortars.
2670AR		**Anti-Graffiti Coatings**
	1	Anti-graffiti coatings shall be of the sacrificial type and shall be capable of being cleaned at least twice before re-coating is necessary.
	2	The coating system shall be applied in accordance with the manufacturer's written instructions.
	3	The application of the coating system shall not change the appearance of the substrate.
	4	Prior to application the surface shall be cleaned of all loose material, oil, grease, dirt and existing graffiti. The surface shall be lightly abraded after cleaning and drying. All loose and flaking paintwork shall be feathered back to a sound edge. A suitable sealer/primer shall be applied to bare areas and areas of graffiti which resist cleaning and may present a problem by showing through the coating system unless sealed.
	5	The cleaning of the coating/removal of graffiti shall not have any detrimental effect on the substrate. Grit-blasting water jetting or chemical cleaning agents likely to have long term effects on the substrate shall not be used.
2671AR		**Graffiti Removal**
		Graffiti posters and encrusted deposits shall be removed by hand high pressure water jetting chemical washing light grit blasting or over-painting of painted surfaces provided the substrate is not damaged. Encrusted deposits may be removed by a light grit blast in accordance with Clause 1772AR provided the substrate is not damaged. The Operating Company shall ensure that all electrical equipment and any other fixtures and fittings are fully protected during graffiti removal. Over-painting shall be in a colour and material to match the existing where necessary and shall be subject to consent in writing by the Overseeing Organisation.
		Series 2800 Winter Service
2801AR		**Winter Service Plant**
	1	Winter Service Plant used for spreading de-icing materials shall: (i) be of proven design and comply with the requirements of British Standard 1622:1989 Spreaders for the Winter Maintenance of Roads,

Clause No.		Title and Written Text
		(ii) be capable of symmetrical and asymmetrical spreading in accordance with the Class A1 requirements of British Standard 1622:1989,
		(iii) be fitted with a de-icing material discharge indicator to inform the operator that treatment has ceased, (iv) have: (a) two rotating amber beacons fitted to the vehicle on the roof of the cab with a visible arc of at least 270° to the front, and (b) one rotating amber beacon at the rear of the vehicle with a visible arc of at least 270° to the rear, that shall be in operation whilst precautionary treatment and snow and ice clearance Operations are being carried out or when the snow plough is attached, (v) have a sign board reading "SPREADING" visible to following vehicles, the lettering of which shall be 160mm in height in black capitals from the 'Transport heavy alphabet' described in the *Traffic Signs Regulations and General Directions* on a yellow Class 1 reflective background in accordance with BS 381C, lemon yellow No 355, (vi) be fitted with a passenger seat, (vii) be painted golden yellow to BS 4800, and (viii) comply with any other relevant requirements relating to Winter Service Plant.
2802AR		**Not used**
2803AR		**Winter Service Vehicle Data Logging and Transmitting Equipment**
	1	The in-vehicle data logger shall be capable of system and data back-up so that the system can be recovered in 12 hours. The data shall be transferred from the vehicle to the data store in near real time (within 30 seconds of collection). In the event of communications failure, the in-vehicle data logger shall be capable of storing one week's worth of data on a robust onboard storage device.
	2	The equipment shall comply with British Standard EN 15430-1:2007 Winter and road service area maintenance equipment-Data acquisition and transmission Part 1: In vehicle data acquisition.
	3	The system shall provide accurate recorded data of the following parameters: (i) location of vehicle, (ii) spreading or not spreading, (iii) rate of spreading, (iv) spreading pattern, width and Lane position, (v) ploughing or not ploughing, (vi) road surface temperature, (vii) air temperature,

Clause No.		Title and Written Text
		(viii) record of weight out of and weight in to the depot, (ix) beacons on or off (including confirmation that they are actually working if on), (x) pre-wet on or off, (xi) flow rates for liquid treatment, (xii) plough orientation, (xiii) driver identification, (xiv) fuel usage, (xv) distance travelled, (xvi) vehicle speed, (xvii) time of leaving depot, (xviii) time of returning to the depot, (xiv) treatment type, (xx) travelling off Route, with driver alert, and (xxi) time. Data shall be referenced to the Ordnance Survey grid.
	4	All Records shall contain a date and time stamp, vehicle identification and the geographical position of the vehicle at the time of record creation and meet the requirements of British Standard EN 15430-1:2007 Winter and road service area maintenance equipment-Data acquisition and transmission Part 1: In vehicle data acquisition.
	5	The data output shall be in accordance with British Standard EN15430-1:2007 Winter and road service area maintenance equipment-Data acquisition and transmission-Part 1: In vehicle data acquisition (DPC:05/30142514DC), to allow data logging information to be easily acquired for transmission.
	6	The accuracy of all data shall be validated by the Operating Company. Calibration of the time and date stamp and Geographical Positioning System location shall be confirmed prior to commissioning and at a frequency not exceeding 12 months thereafter.
	7	The method of calibration and accuracy of the time and date stamp shall be in accordance with British Standard EN15430-1:2007 Winter and road service area maintenance equipment-Data acquisition and transmission-Part 1: In vehicle data acquisition.
2804AR		**Winter Service Vehicle Data Receiving, Storing, Archiving and Web Based Systems**
	1	Data transmitted from the vehicles shall be stored by the Operating Company on a secure server and be accessible by The Director or the Performance Audit Group by means of a web interface, from a commercially available computer.

Clause No.		Title and Written Text
	2	The web interface shall provide access to reports on any of the measured parameters detailed in clause 2803AR. These reports shall be capable of being parameterised to be configured for national, regional and local use.
	3	Reports for the following shall be available: (i) material usage (vehicle weight in and out), (ii) fuel usage, (iii) vehicle mileage, (iv) Route identification and adherence to Route, (v) treatment times, (vi) reports on any/all control functions (plough and spinner/chute settings), (vii) beacons on or off, (viii) driver identification, and (ix) vehicle identification.
	4	The system shall be capable of displaying treatment routes on a map background showing the Trunk Road network in Scotland. The scale of the map shall be user selectable between Unit and national views.
	5	The system shall be capable of displaying due treatment, treated and untreated routes and vehicle position and status in a graphical colour coded format.
	6	The system shall be capable of operating on dial-up type connection when required.
	7	The system shall be capable of alerting the driver if the pre-determined route is not adhered to.
	8	The system shall be capable of generating a remote alert if the vehicle does not follow the prescribed route. The system alert shall be available via user selectable short message service and email.
	9	The system shall display time of last data transmission in order that the viewer can determine if the vehicle is stationary or if there is a break in data transmission.
	10	The Operating Company shall demonstrate how the transmission system will be capable of full operation in poor signal areas or during times of system network overload.
		Series 3300 Site Investigation
3301AR		**Rotary Coring in Carriageways**
	1	Rotary coring in carriageways shall be carried out in accordance with this clause.

Clause No.		Title and Written Text
		Cores shall be 100mm or 150mm nominal diameter and taken in the positions and to the depths proposed by the Operating Company and consented to in writing by the Overseeing Organisation.
	2	Cores shall be cut in accordance with BS 598 using a coring machine that complies with BS 4019.
	3	The walls and base of all holes from which core samples have been cut shall be thoroughly dried and painted with hot bituminous binder immediately prior to reinstatement.
	4	The holes shall be filled to within 50 to 75mm inclusive from the road surface with wet lean concrete and topped off with well compacted bituminous repair material which on completion shall be at the same level as the adjacent surface.
	5	The cores shall be handled carefully to prevent damage and wrapped in polythene to prevent moisture loss. They shall be indelibly marked to indicate the location and date of coring.
	6	Cores shall be packaged to avoid damage, clearly labelled and delivered to the Operating Company's store. At the Operating Company's store, cores shall be handled carefully and stored on purpose built racks or shelves.
	7	Cores shall be stored for periods determined by the Operating Company to enable the necessary recording, testing and data to be obtained or inspected by the Overseeing Organisation.
	8	The Operating Company shall establish if the Overseeing Organisation wishes to inspect the cores prior to disposal.
	9	Core sampling operations testing, referencing, information obtained from data analysis and interpretation shall be recorded by the Operating Company and a copy of data and reports supplied to the Overseeing Organisation.
	10	Any tests required to be carried out on cores shall be subject to an Order.
	11	The Operating Company shall submit evidence, in writing to the Overseeing Organisation for his written consent, that the persons including any sub-contractor proposed to carry out coring testing and reporting Operations have the expertise and resources to carry out any such work.
	12	All coring testing and reporting Operations shall be carried out by a specialist testing firm or laboratory holding accreditation granted in respect of such coring and testing by the United Kingdom Accreditation Service (UKAS) or by the European Co-operation for Accreditation of Laboratories (EAL).
3302AR		**Rotary Coring in Structures**
	1	Rotary coring in Structures shall be carried out in accordance with this clause.
		Cores shall be 50mm 75mm 100mm or 150mm nominal diameter and taken in the positions and to the depths proposed by the Operating Company and consented to in writing by the Overseeing Organisation.

Clause No.		Title and Written Text
	2	The cores shall be cut in accordance with British Standard 598 using a coring machine which complies with British Standard 4019. Cores shall generally be cut through structural concrete with measures taken to avoid encountering reinforcement.
	3	The holes from which core samples have been cut shall be reinstated using repair mortar in accordance with clause 1773AR.
	4	The cores shall be handled carefully to prevent damage and wrapped in polythene to prevent moisture loss. They shall be indelibly marked to indicate the location and date of coring.
	5	Cores shall be packaged to avoid damage, clearly labelled and delivered to the Operating Company's store.
	6	At the Operating Company's [store] cores shall be handled carefully and stored on purpose built racks or shelves.
	7	Cores shall be stored for periods determined by the Operating Company to enable the necessary recording testing and data to be obtained or inspection by the Overseeing Organisation.
	8	The Operating Company shall establish if the Overseeing Organisation wishes to inspect the cores prior to disposal.
	9	Any extended storage periods requested by the Overseeing Organisation shall be subject to an Order.
	10	Core sampling operations, testing, referencing, information obtained from data analysis and interpretation shall be recorded by the Operating Company.
	11	Any tests required to be carried out on cores shall be subject to an Order.
	12	The Operating Company shall submit evidence, in writing to the Overseeing Organisation for his written consent, that the persons including sub-contractors proposed to carry out coring testing and reporting Operations have the expertise and resources to carry out the work.
	13	All coring testing and reporting Operations shall be carried out by a specialist testing firm or laboratory holding accreditation granted in respect of such coring and testing by the United Kingdom Accreditation Service (UKAS) or by the European Co-operation for Accreditation of Laboratories (EAL).
3303AR		**Structural Investigations**
	1	Separate reports upon the findings and testing together with photographic evidence shall be supplied for each Structure as detailed in Appendix 33/1.
	2	The Operating Company shall determine in accordance with the other requirements of this Contract, the need for the reports to contain a section giving an expert interpretation of the results of the investigation, and if so the reports shall contain such a section.
	3	The number of copies for each report shall be as stated in Appendix 33/1.

Clause No.		Title and Written Text
	4	All sampling and testing Operations shall be carried out by a specialist testing firm or laboratory holding appropriate accreditation granted in respect of such sampling and testing.
3304AR		**Inspection Patches within Surfacing on Bridge Structures**
	1	The general requirements for excavation and reinstatement of inspection patches within surfacing on bridges shall be as referred to in the appropriate clauses of Series 600, 700, 900 and 1100.
	2	Details of patch size and location within footways and carriageways shall be determined by the Operating Company.
	3	Such inspection patches shall be excavated through any flexible surfacing asphaltic sand carpet and waterproofing system which may be present.
	4	Following excavation, all residual deposits of surfacing and waterproofing shall be disposed of and the deck cleaned.
	5	Excavation patches shall remain open for testing and inspection and shall only be reinstated after having received the written consent of the Overseeing Organisation.
3305AR		**Trial Pits in Paved Areas**
	1	The Operating Company shall excavate trial pits to permit inspection or sampling of unbound or bound materials.
	2	The size and location of the trial pits shall be determined by the Operating Company.
	3	Trial pits shall be excavated and reinstated in accordance with clause 706 except that trial pits shall remain open for testing and inspection by the Overseeing Organisation.
3306AR		**Falling Weight Deflectometer Tests**
	1	The Operating Company shall undertake falling weight deflectometer tests to assess the structural condition of bituminous and cementitious road pavements.
	2	The location, length to be tested and number of tests to be carried out shall be determined by the Operating Company.
	3	The testing and reporting shall be carried out in accordance with the guidance given in HD 29/08 (DMRB, Volume 7.3.2).
3307AR		**Dynamic Cone Penetrometer Tests**
	1	The Operating Company shall undertake dynamic cone penetrometer tests to assess the structural condition of bituminous and cementitious road pavements.
	2	The testing shall be carried out in accordance with the manufacturer's written instructions.

Clause No.		Title and Written Text
	3	The calculations and reporting shall be carried out in accordance with the guidance given in *Transport and Road Research Laboratory Overseas Road Note 8 – A Users Manual for a Program to Analyse Dynamic Cone Penetrometer Data*.
3308AR		**Structural Investigations Tests**
	1	Structural investigations tests shall be as described in Appendix 33/1.
		Series 6100 Core Operations
6101AR		**Maintenance of Road Restraint Systems**
	1	Safety barriers shall be re-tensioned in accordance with the requirements of clause 472AR.
	2	Re-tensioning required outwith the maintenance cycle shall only be when instructed by the Overseeing Organisation.
6102AR		**Maintenance of Gullies, Catchpits, Interceptors, Soakaways, Manholes and Oil Separators**
	1	Cleaning of gullies, catchpits, interceptors, soakaways, manholes and oil separators shall be carried out in accordance with clauses 520 and clause 521 and the following:
	2	The outlet pipe shall be jetted with clean water to ensure that it is flowing freely. The location of any restrictions in flow and obstruction that cannot be removed shall be recorded. Polluted water shall not be used to jet, surcharge or refill gullies.
	3	Before putting a gully grating or cover back on after cleaning, a spot of paint shall be sprayed onto the underside. The colour of the paint shall differ for each cycle of cleaning.
	4	Details of the Operations including as a minimum the Scheme Identifier, where applicable, Operations Instructions road and number of gullies and chambers emptied and any Defects found in respect to blockages or damages to the drainage system or components together with the location of those Defects shall be recorded.
6103AR		**Maintenance of Drainage Grips**
	1	Drainage grips shall be maintained by cutting and cleaning such that free flow of water shall not be impeded and water does not stand on the carriageway adjacent to the grip.
6104AR		**Maintenance of Linear Drainage Systems,**
	1	Linear drainage systems shall be maintained by cleaning in accordance with clauses 520 and clause 521.
	2	Cleaning may be carried out by drawing through a mandrel with a diameter 20mm less than the nominal diameter of the pipe or nominal minimum area of the "waterway area" of the block.

Clause No.		Title and Written Text
	3	If necessary a root cutter attachment shall be used with the high-pressure water jetter.
	4	Piped grips shall be cleaned by removing all silt and loose obstructions from the pipe such that the free flow of water is not impeded and that the water does not stand on the carriageway adjacent to the piped grip.
	5	Each end of the piped grip shall be maintained free from vegetation or other obstructions including any material expelled from the pipe.
	6	Where the invert of the outlet is below the invert of the ditch the invert of the ditch shall be excavated until the invert of the pipe is exposed.
6105AR		**Maintenance of Filter Material**
	1	Filter material shall be loosened by harrowing to a depth of 200mm over the full width of the drain including contiguous filter material so as to minimise retention of water within this depth.
	2	All weed growth in filter material shall be treated in accordance with clause 3002.
	3	The location of any obstruction that cannot be removed shall be recorded.
	4	Any build up of detritus within the filter material or between the edge of the carriageway and the filter drain shall be removed.
6106AR		**Maintenance of Drainage Structures**
	1	Drainage structures shall be maintained by cleaning in accordance with clauses 520 and clause 521.
	2	Each end of the drainage structure including any ancillary drainage items shall be kept free of vegetation and other obstructions including any material disturbed during cleaning. The drainage structure shall be kept free from debris. Erosion of the banks and bed of a watercourse at the end of a drainage structure shall be repaired and any scour protection re-instated as required.
	3	Where the invert of any drainage structure at intake and outfall points is below the invert of an adjacent watercourse, the watercourse invert shall be excavated to the invert level of the drainage structure to facilitate flow from the drainage structure.
	4	The Operating Company shall maintain a record of any Defects found during maintenance Operations and shall report any hazards immediately to the Overseeing Organisation.
6107AR		**Maintenance of Ancillary Drainage Items**
	1	Ancillary drainage shall be maintained by clearing all vegetation and debris and cleaning to remove all silt, obstructions and other detritus.
	2	Sluices, tidal flaps, penstocks, valves, pumps and other specialist equipment shall be maintained by checking that all mechanisms are functioning as required and lubricating any moving parts in accordance with any manufacturers' instructions.

Clause No.		Title and Written Text
	3	The Operating Company shall maintain a record of any Defects found during maintenance Operations and shall report any hazards immediately to the Overseeing Organisation.
6108AR		**Litter and Refuse**
	1	Subject to the other provisions of this Contract, the Operating Company shall ensure that all roads and other land within the Unit are maintained to the standards of a Category 6 Zone as set out in the Code of Practice on Litter and Refuse issued under section 89 of the Environmental Protection Act 1990 document no. SE/2006/164 by the Scottish Executive Environment Group in October 2006.
	2	Road cleaning and clearance of channels shall be to such a standard that, on completion of the Operation, there is an unimpeded passage for storm water into the drainage system. Vehicles engaged in sweeping shall only travel in the same direction of flow as the adjacent road traffic. Any growth of grass or other vegetation which may obstruct the flow of water in the channel shall be controlled in accordance with clause 3002.
	3	The term "grassed areas" as referred to in the Code of Practice on Litter and Refuse shall be deemed to cover all areas within the Trunk Road boundary which are not hard surfaced.
	4	Central reservations may be grassed areas or hard surfaced areas.
6109AR		**Maintenance of Road studs**
	1	Any road stud which has become displaced from its socket or is loose or broken shall be removed from the carriageway immediately and the resulting socket shall be filled with bituminous instant repair material.
6110AR		**Maintenance of Structures – General**
	1	Vegetation on or adjacent to a Structure shall be removed using methods which do not damage the structure. Injurious weeds such as Japanese Knotweed and Giant Hogweed shall be removed in accordance with clause 3002 and reported to the Overseeing Organisation.
	2	Debris from any part of a Structure shall be removed using methods which do not damage the Structure.
	3	Bird droppings shall be removed using methods which do not damage the structure.
	5	Bolts shall be checked and tightened to the appropriate torque.
	5	Missing bolts shall be replaced and tightened to the appropriate torque.
	6	Local damage to protective systems shall be made good.
	7	Cleaning shall not be carried out when the ambient temperature is 2°C or less and falling or when the Operations are likely to result in the formation of ice.

Clause No.		Title and Written Text
6111AR		**Maintenance of Expansion Joints**
	1	Debris and vegetation shall be cleaned out from the expansion joint.
	2	Bolts securing the expansion joint, cover plates and nosing joints shall be checked and tightened to the appropriate torque.
	3	Missing bolts shall be replaced and tightened to the appropriate torque.
	4	Securing compounds shall be checked and repaired as necessary.
	5	Neoprene or elastomeric material shall be checked for splitting or detachment from the supporting frame by a visual inspection and the use of appropriate hand tools.
	6	Cover plates and nosing joints shall be checked by visual inspection and the use of appropriate tools.
	7	Debris and sediment from associated drainage below the joint shall be cleared.
6112AR		**Maintenance of Bridge Drainage Systems**
	1	Cleaning of bridge drainage systems shall be carried out in accordance with clauses 520, 6102AR, 6103AR, 6104AR and 6106AR.
	2	Drainage holes in structural components, obstructions, outlet pipes, diffusers, outlet manholes, weep pipes, silt and debris deposits shall be cleaned using appropriate hand tools drainage rods and mechanical means including jetting.
	3	Flap valves shall be checked for operation by hand or using appropriate lifting devices.
	4	Hinges and fixings shall be greased using a corrosion inhibiting lubricant that will not flow below 70°C.
	5	Vegetation and weeds blocking pipes shall be removed.
6113AR		**Maintenance of Parapets and Pedestrian Protection on Structures**
	1	Hollow section drain holes shall be cleaned.
	2	Bolts shall be checked and tightened to the appropriate torque.
	3	Missing bolt assemblies shall be replaced and tightened to the appropriate torque.
	4	Local damage to protective systems shall be made good.
	5	Parapet expansion joints shall be checked for freedom.
	6	Connections with adjoining vehicle restraint barriers shall be checked.
6114AR		**Maintenance of Bearings and Bearing Shelves**
	1	Maintenance shall be in accordance with the manufacturers' requirements.
	2	Local damage to protective systems shall be made good.

Clause No.		Title and Written Text
	3	Bearings shall be checked for freedom of movement and any signs of misalignment, binding, distortion or excessive freedom shall be reported to the Overseeing Organisation.
6115AR		**Maintenance of Structures Over or Conveying Watercourses**
	1	Structures over or conveying watercourses shall be maintained, including clearing of vegetation, debris and encrustations, greasing and lubrication where appropriate.
	2	Maintenance shall be in accordance with manufacturers' requirements or information in the maintenance manual or as-built records.
6116AR		**Maintenance of Sign or Signal Gantries and High Mast Lighting Masts**
	1	Holding down assemblies and fixings, including to cladding, shall be checked and tightened to the designed method or correct torque.
	2	Missing bolts in the holding down assemblies and fixings shall be replaced and tightened to the designed method or correct torque.
	3	Holding down assemblies shall be cleaned and re-greased in accordance with the manufacturer's written specifications, where available.
	4	Cladding shall be cleaned using detergents that will not discolour/degrade cladding finishes.
	5	Seals to box type gantries shall be visually inspected for leaks using torches and tools suitable for use in confined spaces. Any box type gantries that are not wind and waterproof shall be reported to the Overseeing Organisation.
	6	High mast winch and head frame assemblies shall be inspected and maintained in accordance with the manufacturers requirements.
	7	Removal of debris from any part of a Structure shall be undertaken without damage to the Structure and any protective systems.
	8	Local damage to protective systems shall be made good.
6117AR		**Maintenance of Non-structural items**
	1	Moveable parts shall be cleaned and greased and in accordance with the manufacturers' requirements.
	2	Holding down assemblies and fixings, including to cladding, shall be checked and tightened to the designed method or correct torque.
	3	Missing bolts in the holding down assemblies and fixings shall be replaced and tightened to the designed method or correct torque.
	4	Holding down assemblies shall be cleaned and re-greased and in accordance with the manufacturer's written specifications, where available.
	5	Local damage to protective systems shall be made good.
	6	Vegetation shall be removed in accordance with clause 6110AR.
6118AR		**Maintenance of Underpasses and Culverts used by Pedestrians and Cyclists and Retaining Walls**

Clause No.		Title and Written Text
	1	All surfaces, painted finishes and protective systems within culverts and underpasses including ceilings, soffits and handrails shall be cleaned without any detrimental effect to the surface finishes or protective systems.
	2	Cleaning of polycarbonate mirrors shall be undertaken by hand using the appropriate methods as specified in writing by the manufacturer, where available.
6119AR		**Maintenance of Road Traffic Signs**
	1	Road traffic signs shall be maintained by cleaning using methods which do not damage them.
	2	Hazard posts and marker posts shall be straightened and the ground around the base of the post re-compacted.
	3	Cleaning shall not be carried out when the ambient temperature is 2°C or less and falling or when the Operations are likely to result in the formation of ice on the footway or carriageway.
	4	Ladders shall not be leant against sign faces.
6120AR		**Maintenance of Lit Sign Units**
	1	Lit Sign Units shall be maintained by:
		(i) cleaning of all photo electric control units, luminaire external and internal surfaces and any other components affecting the optical performance of the luminaire using methods that do not damage them, (ii) degreasing, lubricating and checking the operation of all toggles, wing nuts, hinges, door locks and lifting gear, (iii) aligning bracket luminaire and luminaire optical equipment in respect of the sign face and to minimise glare to traffic, (iv) checking and tightening screws and locking devices in accordance with the manufacturer's instructions, (v) identifying and recording damage, corrosion or misalignment of posts, (vi) identifying and recording electrical components showing signs of overheating, fracture, condensation or tracking, (vii) inspecting lamps removed for cleaning purposes, and if no longer serviceable replacing the lamp with a new lamp of an equivalent specification. If serviceable, the lamp shall be refitted, (viii) replacing lamps, (ix) marking new lamps with the date of installation and recording this date, (x) identifying and recording faults on any electrical unit, (xi) visually checking fixings and recording any Defects,

Clause No.		Title and Written Text
		(xii) identifying and recording damage, corrosion or other Defects of conduits, (xiii) checking all electrical connections and recording any Defects, (xiv) checking all earthing connections and recording any Defects, and (xv) clearing debris from around sign post bases for 1 metre radius.
	2	The supply shall be isolated at the cut-out for the removal and fitting of lamps.
	3	Any faulty lamp shall be disposed of in accordance with clause 1370AR.
6121AR		**Maintenance of Traffic Signals**
	1	Traffic signals shall be maintained by: (i) cleaning lenses internal and external surfaces and any other components affecting the optical performance of the lenses in accordance with manufacturer's recommendations, (ii) checking and tightening all grub screws and locking devices in accordance with the manufacturer's instructions, (iii) identifying and recording damage, corrosion or misalignment of posts, (iv) identifying and recording electrical components showing signs of overheating fracture condensation or tracking, (v) inspecting lamps removed for cleaning purposes, and if no longer serviceable replacing the lamp with a new lamp of an equivalent specification. If serviceable, the lamp shall be refitted, (vi) identifying and recording faults on any electrical unit, (viii) visually checking fixings and recording any defects, (ix) identifying and recording damage, corrosion or other defects of conduits, (x) checking all electrical connections and recording any defects, (xi) checking of all earthing connections and recording any defects, and (xii) clearing debris from around post bases for 1 metre radius.
	2	The supply shall be isolated at the cut-out for the removal and fitting of lamps.
	3	Any faulty lamp shall be disposed of in accordance with clause 1370AR.
6122AR		**Maintenance of Roadside Electrical Assets and Power Supplies**
	1	Specific requirements for equipment identified in the risk assessment shall be in place prior to electrical maintenance work commencing.
	2	The Operating Company shall obtain the prior agreement of the appropriate third party before carrying out work which will result in loss of service of third party roadside electrical assets.

Clause No.		Title and Written Text
	3	Replacement components shall be either the same as that being replaced or an equivalent.
	4	The Operating Company shall store all faulty columns and lanterns removed from the Unit for four weeks to allow inspection by the Overseeing Organisation.
	5	The Operating Company shall carry out maintenance Operations of luminaires, columns and brackets, underground cable systems, feeder pillars and associated switchgear, control systems, and any other roadside electrical assets and lighting.
	6	When replacing luminaires, columns, brackets and other electrical apparatus as maintenance Operations, the Operating Company shall comply with the aesthetic requirements of clause 1302 and shall ensure that any replaced items match the existing in physical appearance, lighting levels and operational capability.
	7	Unless otherwise agreed with the Director, all replacement lamp control gear shall comply with the following specifications: (i) be of electronic type, (ii) be Digital Addressed Lighting Interface (DALI) compatible, enabled and accredited, (iii) be capable of being controlled via a lighting central management system, (iv) be capable of implementing set dimming/trimming control regimes autonomously, and (v) be ELEXON approved.
	8	The Operating Company shall inform the Traffic Scotland Operations and Infrastructure Services Contractor prior to isolating or energising power supplies to any equipment that Traffic Scotland operates.
	9	All work carried out by the Operating Company, with the exception of inspections and testing on electrical apparatus shall be recorded by: (i) a work report, (ii) a call out report, or (iii) another method approved by the Overseeing Organisation.
	10	The Operating Company, when submitting call out reports and work reports, shall use the format of the model forms below. These reports shall be forwarded to the Overseeing Organisation in accordance with the reporting requirements of Schedule 5 Part 3.
	11	The Operating Company shall comply with *Transport* Scotland guidance document *LDS8020 – Guidance on the preparation of Statement of Intents relating to proposed works on Roadside Electrical Assets and Lighting* when submitting Bids for Works relating to electrical apparatus.

Clause No.		Title and Written Text
	12	The Operating Company shall comply with the recommendations made in Transport Scotland guidance document *LDS8018_Sustain – Guidance on Sustainability in relation to Roadside Electrical Assets and Lighting*.
	13	The Operating Company shall ensure that new items of energy consuming equipment supplied for use on the Unit are provided with an appropriate charge code (ELEXON code) for incorporation into the electrical apparatus inventory in accordance with Transport Scotland guidance document *LDS8012– Guidance Note on MPANS and using ELEXON Consumption Codes for Roadside Electrical Assets and Lighting*.
	14	The Operating Company shall comply with Transport Scotland' guidance document *LDS8016_ScotMCHW – Scottish MCHW Series 1200, 1300 & 1400 and Sample Appendices*
	15	The Operating Company shall comply with Transport Scotland guidance document *LDS8007_Refs – Roadside Electrical Assets and Lighting Recommended Reference Documents Listing*.
	16	The Operating Company shall comply with Transport Scotland guidance document *LDS8021_Festive – Festive Decorations on the Trunk Road Network*.
	17	The Operating Company shall comply with Transport Scotland guidance document *LDS8024_WStns – Weather Stations (Road Sensor) Equipment on Scottish Trunk Roads*.
	18	The Operating Company shall, where applicable make use of the Transport Scotland guidance document *LDS8025_Drwgs – Typical Drawings relating to Roadside Electrical Assets and Lighting*. These are provided for information.
	19	Where modules relating to Transport Scotland's lighting central management system, for the control of roadside electrical assets, lighting and power supplies, are fitted, such items will become part of the maintained equipment. Typically these modules will consist of sealed, readily replaceable subassemblies mounted directly on the asset being controlled, such as a luminaire and similar enclosed roadside equipment. The Operating Company shall replace such modules when necessary as part of their inspection and maintenance of the roadside electrical assets.

Call Out Report Form	
DATE	WEATHER CONDITIONS
TIME CALLED OUT	CALLED OUT BY
TRUNK ROAD/MOTORWAY	LOCATION
DESCRIPTION OF WORK	
To include: equipment damaged	
nature of emergency	
registration of any vehicle involved	
colour and type of vehicle involved	
name and number of Police Officer at scene	
photographs glued to reverse side of report	
details of any liaison with electricity company	
police station reference.	
MATERIALS USED	
To include stores issue number.	
TIME ON SITE	
TIME OF LEAVING SITE	
ADDITIONAL TEAM TYPES AND DURATION	
DESCRIPTION OF PLANT USED AND DURATION	
NAME OF APPROVED ELECTRICIAN	
SIGNATURE OF APPROVED ELECTRICIAN	
NAME OF SUPERVISOR	
SIGNATURE OF SUPERVISOR	

Works Report Form

ORDER NUMBER DATE OF ISSUE

TODAY'S DATE

WEATHER CONDITIONS

LOCATION TIME OF ARRIVAL ON SITE

DESCRIPTION OF WORK

To include accurate details of all Site operations undertaken in order of the Site operations carried out:

results of tests or protective measures taken by the operatives

any difficulties and further action required

details of clause 1402 times of isolation and energising of power supplies

details of any liaison with electricity companies.

MATERIALS USED

TIME OF LEAVING SITE

TYPE OF CLOSURE USED

DURATION OF CLOSURE

OUTSTANDING WORK

DESCRIPTION OF TEAM TYPES USED AND DURATION

NAME OF SUPERVISOR

SIGNATURE OF SUPERVISOR

Clause No.		Title and Written Text
6123AR		**Not used**
6124AR		**Maintenance of High Mast Lighting**
	1	Maintenance of high mast lighting units shall be in accordance with clause 6122AR and *PLG07 High Masts for Lighting and CCTV. Amended 2003*.
6125AR		**Incident Response**
	1	The response time for attendance of the Operating Company's initial, secondary and back-up Incident Response Resources at the scene of an Incident shall be as stated in Appendix 32/1. During the hours specified in Appendix 32/1, the Operating Company may use the resources identified to respond to requests for assistance on other Operations in connection with this Contract. However they must be able to attend at the Site of any incident on any part of the Unit within the response time stated in Appendix 32/1.
		Resources for Incident Operations
	2	Details of the types of Incident Support Resources that the Operating Company may utilise to respond to incidents are as specified in Appendix 32/1.
6126AR		**Not used**
6127AR		**Removal of Graffiti, Posters and Encrusted Deposits**
	1	Graffiti, posters and encrusted deposits shall be removed by suitable methods which do not damage the substrate.
6128AR		**Not used**
6129AR		**Not used**
6130AR		**Maintenance of Geotechnical Assets**
	1	The removal of stones, rocks and other debris from behind and in contact with the geotechnical assets shall be carried out within or associated with the Unit at sufficient frequency to ensure that damage does not occur to the asset.
		Series 6200 Professional Services Staff
6201AR		**Requirements for Professional Services Staff**
	1	The requirements of role, qualifications, experience, areas of knowledge and key and specific tasks for staff engaged in undertaking Professional Services shall be as stated in Appendix 62/1.

Substitute Clauses, Tables and Figures

Clause No.		Title and Written Text
		Preliminaries
110SR		**Information Boards**
	1	The information boards required are: (i) **Network Customer Information Signs** The Operating Company shall supply and erect network customer information plated signs as detailed in Schedule 3 Part 6. The Operating Company shall remove the sign face not later than the Service End Date. The network customer information signs shall be erected no later than seven days after Commencement of Service Date 1. The Operating Company shall maintain the signs in a clean condition. Signs shall be constructed and assembled in accordance with clause 1207, (ii) **Works Contract Information Signs** Scheme information boards shall comply with the *Traffic Signs Regulations and General Directions (2002)* sign reference 7007.1 and shall be constructed and assembled in accordance with clause 1207, and (iii) **Operations Information Signs** Temporary scheme contact signs, as defined in the *Traffic Signs Regulations and General Directions (2002)*, sign reference 7008, shall be erected at all Sites within the Unit while Operations, including traffic management, are being carried out. In the permitted variants of sign reference 7008, the word "Undertaker's" shall be replaced with the words "Operating Company's". In the description of the sign reference 7008, the word "employer" shall be replaced with the words "Operating Company". The signs shall be erected in a prominent position at either end of the Site so that they may be read easily by users of the Trunk Road. The sign shall display the name and telephone number of the organisation responsible for carrying out such Operations.
	2	The Operating Company shall keep clean and maintain any information boards and shall dismantle and remove them on completion of the Operations.

	3	The Operating Company may erect for its own purpose sign boards at the entrance to each of the compounds which it uses in connection with the maintenance of the Unit. The size of these boards shall be no greater than the boards required for network customer contact signs and shall be subject to the approval of the appropriate planning authority.
	4	Operating Company advertising boards other than the customer information signs set out in Schedule 3 Part 6 will not be allowed on or adjacent to the Unit except at the entrance to compounds.
1202SR		**General Requirements for Permanent Traffic Signs**
	1	Materials for permanent traffic signs and their construction, assembly, location and erection shall comply with this Series, Series 1400 and the requirements of this Contract. The manufacture and installation of traffic signs shall be in accordance with the quality management scheme described in Appendix A.
	2	Each complete traffic sign or part thereof shall be capable of passing the tests in British Standard EN 12899-1:2001. Unless protected by existing safety barriers, signs shall be, designated as passively safe and shall conform to testing in accordance with British Standard EN 12767:2007 and TD89/08, and be installed in compliance with TD19/06 of the DMRB.
	3	Sign panels of internally illuminated signs, transilluminated signs and luminaire face panels shall comply with impact British Standard EN 12889-1:2001.
	4	All lit traffic signs shall comply with Category 1 luminance of British Standard EN 12899-1:2001.
	5	Before the commencement of fabrication of any traffic sign, the Operating Company shall submit for the Overseeing Organisation's consent: (i) fabrication drawings for 'directional informatory' and 'informatory' signs which shall be as required by Appendix 1/4, (ii) the information about 'warning', 'regulatory' and other traffic signs required in Appendix 12/1.
	6	A traffic sign housing shall be provided with vandal and weather resistant locks. Keys shall be provided to the Overseeing Organisation, in the quantities stated in Appendix 12/1. Types of lock shall be kept to a minimum and shall be as described in Appendix 12/1.
	7	The backs of traffic signs shall have a location identifying mark as described in Appendix 12/1. Illuminated traffic signs shall also be labelled in accordance with Transport Scotland (TS) Guidance Note LDS8001_ *Roadside Electrical Asset and Lighting Identification System*. The identifying code shall be provided by the Operating Company responsible for the road. Contact details are provided in Appendix 12/1.
	8	Traffic signs and poles shall at all times be handled, transported and stored in accordance with the manufacturers recommendations and be at all times adequately protected to prevent damage.

1204SR		**Posts for Permanent Traffic Signs**
	1	Posts for permanent traffic signs shall be as described in Appendix 12/1 and shall comply with British Standard EN 12899-1:2001. The surface protection requirements shall similarly comply with British Standard EN 12899-1:2001. Installation shall be in compliance with TD 19/06. Sign posts shall also conform to testing in accordance with British Standard EN 12767:2007 and be constructed as to conform to the following: (i) steel posts shall be tubular or rectangular hollow section complying with British Standard EN 10 210, joists, universal beams or columns complying with British Standard 4-1, and shall be manufactured from steel complying with grade S275 JO or S275 J2, (ii) aluminium posts shall be of tubular or rectangular hollow section, lattice or other construction as agreed with the Overseeing Organisation. Such posts shall not include joints except at the sign head fixing, and (iii) Concrete posts shall only be used for special and specific applications. Such use shall be agreed with the Overseeing Organisation on a Site by Site basis.
	2	Posts shall not protrude above the top of the sign unless supporting an external luminaire, in which case the protrusion shall be kept to no greater than 120mm. Posts shall be fitted with suitable permanently affixed weatherproof cap of a type capable of providing watertight protection for a minimum of 20 years.
	3	Internally illuminated posts for pedestrian crossing beacons shall comply with sub-clause 2 above and where appropriate with British Standard EN 12899-1:2001.
	4	Signs erected on a single post shall be positioned so that the post is in the centre of the sign, unless otherwise described in Appendix 12/1.
	5	Compartments for electrical equipment shall be as described in Appendix 12/1 and, wherever practicable shall be installed such that the door is facing away from the oncoming traffic allowing maintenance personnel to access the door while facing the traffic. The use of other access door orientation shall only be agreed with the Overseeing Organisation at very specific locations. In the case of signs supported by more than one post, such compartment shall be on the post furthest from the carriageway unless otherwise described in Appendix 12/1.
	6	Where flange plates are required they shall have holes or slots as described in Appendix 12/1 to accommodate the installation system.
1801SR		**Structural Steelwork General**
	1	1. All steelwork shall be in accordance with British Standard EN 1090-2:2008 and the *Steel Bridge Group Model Project Specification (SCI Publication P382:2009),* all as amended by Clauses 1802SR and 1803SR. 2. For orthotropic steel decks, the requirements within British Standard EN 1993-2 Annex C Clause C.3 shall apply.

1802SR		**Amendments to British Standard EN 1090-2:2008**
	1	1. Delete section 5.6.10. Hot rivets are not permitted. 2. Delete sections 10.1 and 10.2 and Annex F. Surface treatment to be in accordance with SHW Series 1900.
1803SR		**Amendments to Steel Bridge Group Model Project Specification**
	1	1. Insert in Section 4.101 "British Standard EN 1090-2 Execution of steel Structures and aluminium Structures Company to add further standards to Appendix 18/1" 2. Replace Clause 4.201 with "A quality plan for the execution of the works, in accordance with NHSS 20, shall be provided and maintained." 3. Delete Clause 6.602. Hot rivets are not permitted. 4. Insert in section 7.402 "Pre-production welding tests shall be carried out on complex weld configurations and highly fatigue sensitive details. These shall include but are not restricted to the trough to deck weld and the trough to transverse comb weld." 5. Replace Clause 7.505 with "Permanent backing material may only be used where the Designer has taken it into account including the joint classification for the backing material in the fatigue design and indicated it on the drawings for construction." 6. Replace Clause 8.203 with "The Structure shall not be designed to utilise the shear resistance of the unthreaded shank of bolts." 7. Delete Clause 8.701 and 8.702. Hot rivets are not permitted on this project. 8. Delete Clauses 10.1, 10.2, 10.5, 10.6, 10.8 and 10.9. Surface treatment to be in accordance with SHW Series 1900. 9. Replace 11.302 with, "In addition to the requirements in D.2, the following functional tolerances apply: i) Trough to deck plate weld:

		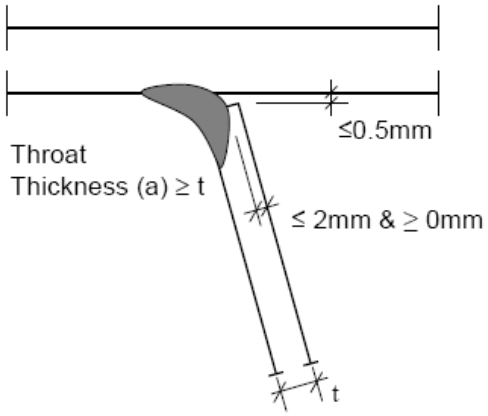 10. Delete Clause 12.706. 11. Delete Annex F. Corrosion protection to be in accordance with SHW Series 1900. 12. The Operating Company shall complete the following Clauses by providing details in Appendix 18/1: 5.101, 5.307, 5.606, 6.501, 5.901, 6.604, 6.606, 6.1001, 7.501, 7.506, 7.508, 7.510, 7.602, 7.603, 8.204, 8.901, 8.902, 9.301, 9.302, 9.303, 9.304, 9.401, 12.201, 12.401, 1 .504, 12.704, 12.707
2101SR		**Bridge Bearings – General**
		Unless otherwise described in Appendix 21/1, bearings shall be supplied and installed in compliance with British Standard EN 1337 "Structural bearings" consisting of the following parts: (a) Part 1 - General design rules (b) Part 2 - Sliding elements (c) Part 3 - Elastomeric bearings (d) Part 4 - Roller bearings (e) Part 5 - Pot bearings (f) Part 6 - Rocker bearings (g) Part 7 - Spherical and cylindrical PTFE bearings (h) Part 8 – Guided and restrained bearings (i) Part 9 - Protection (j) Part 10 - Inspection and maintenance (k) Part 11 - Transport, storage and installation excluding subsections relating to corrosion protection which is covered under Series 1900.

Appendix F AR		Appendix F is extended by the addition of the publications listed below.	
	1	**British Standards**	Specification Clause/Table
	BS 2874	Specification for copper and copper alloy rods and sections (other than forging stock)	1423
	BS 4019	Rotary core drilling equipment. Specification for System A	3301AR, 3302AR
	BS 7609	Code of practice for installation and inspection of uninsulated compression and mechanical connectors for power cables with copper or aluminium conductors	1420
	BS 7973	Spacers and chairs for steel reinforcement and their specification. Product performance requirements	1714
	BS EN 1542	Products and systems for the protection and repair of concrete structures. Test methods. Measurement of bond strength by pull-off	1774AR
	BS EN 1770	Products and systems for the protection and repair of concrete structures. Test methods. Determination of the coefficient of thermal expansion	1774AR
	BS EN 12390	Testing hardened concrete. Making and curing specimens for strength tests	1774AR
	BS EN 12504	Testing concrete in structures. Cored specimens. Taking, examining and testing in compression	Table 17/71
	BS EN 12617	Products and systems for the protection and repair of concrete structures. Test methods. Shrinkage of crack injection products based on polymer binder: volumetric shrinkage	Table 17/71
	BS EN 12767	Passive safety of support structures for road equipment. Requirements, classification and test methods	1202SR; 1204SR; 1301.
	BS EN 12889	Fixed, vertical road traffic signs. Delineator posts and retroreflectors	1202SR
	BS EN 13396	Products and systems for the protection and repair of concrete structures. Test methods. Measurement of chloride ion ingress	Table 17/71
	BS EN 13412	Products and systems for the protection and repair of concrete structures. Test methods. Determination of modulus of elasticity in compression	Table 17/71
	BS EN 50081	Electromagnetic compatibility. Generic emission standard. Residential, commercial and light industry	1409

	BS EN 50082	Electromagnetic compatibility. Generic immunity standard. Residential, commercial and light industry	1409
	BS EN 62305	Protection against lightning. General principles	1420
	BS EN 60068	Environmental testing. Tests. Test Fc. Vibration (sinusoidal)	1409

TABLE 50/2SR: Requirements for Bridges, Parapets, Bearings, CCTV Masts, Cantilever Masts, Steel Lighting Columns and Bracket Arms and other Highway Structures: Protective Systems

I (M) – High Build Epoxy (2 pack)/ Polyurethane (2 pack) finish				
Substrate Type	1 Steel	2 Aluminium metal spray, zinc metal spray	3 Existing paint coats	4 Existing paint coats
Surfaces prepared to	Clean, bright Sa2 or St3 quality steel	Bright or sound metal coating	Sound finishing coat or last undercoat	Other sound paint coats
1st Coat Item No. Minimum dry film thickness (μm)	 Item 115 100	 Item 115 100	 Nil _	 Nil _
2nd Coat Item No. Minimum dry film thickness (μm)	 Item 116 _	 Item 116 or 112 _	 Nil _	 Item 116 or 112 100
3rd Coat Item No. Minimum dry film thickness (μm)	 Item 168 50	 Item 168 50	 Item 168 50	 Item 168 50
Minimum total dft of the paint system to be obtained (μm)	300μm	300μm	50μm	175μm
STRIPE COATS	Item 112, 80 μm mdft. Brush or airless spray. One stripe coat in area prepared to clean steel or sound metal coating. Applied over 1st coat.			
PATCH COATS	Nil			

TABLE 50/2SR: Requirements for Bridges, Parapets, Bearings, CCTV Masts, Cantilever Masts, Steel Lighting Columns and Bracket Arms and other Highway Structures: Protective Systems (Continued)

NOTES:

1. When a light tint gloss finish is required an extra coat of Item 168 shall be applied. Item 169 Polyurethane Finish, may be used in lieu of Item 168 to provide a semi-gloss finish, alternatively Item 164 (Moisture Cure Polyurethane finish) can provide a semi-gloss finish and is tolerant of surface moisture (but not running water) and low temperatures during application and curing.
2. Types I (M) and II (M) can be combined to allow paint maintenance to proceed when temperature falls and relative humidity increases and for night work.

HEALTH & SAFETY

Polyurethane (two pack) and Moisture Cured Polyurethane paints contain isocyanate and can be injurious to health if not used correctly.

An assessment of the risks and controls for their safe use shall be carried out before use.

TABLE 50/2SR: Requirements for Bridges, Parapets, Bearings, CCTV Masts, Cantilever Masts, Steel Lighting Columns and Bracket Arms and other Highway Structures: Protective Systems (continued)

II (M) – MC/Polyurethanes				
Substrate Type	1 Steel	2 Aluminium metal spray, zinc metal spray	3 Existing paint coats	4 Existing paint coats
Surfaces prepared to	Clean or bright steel	Bright or sound metal coating	Sound finishing coat or last undercoat	Other sound paint coats
1st Coat Item No. Minimum dry film thickness (μm)	 Item 160 40	 Item 160 40	 _ _	 _ _
2nd Coat Item No. Minimum dry film thickness (μm)	 Item 162 _	 Item 162 _	 _ _	 Item 162 70
3rd Coat Item No. Minimum dry film thickness (μm)	 Item 162 70	 Item 162 70	 _ _	 Item 162 70
4th Coat Item No. Minimum dry film thickness (μm)	 Item 164/169 40/50	 Item 164/169 40/50	 Item 164/169 40/50	 Item 164/169 40/50
Minimum total dft of the paint system to be obtained (μm)	275/325μm	275/325μm	50/100μm	225/275μm
STRIPE COATS	Item 162, 50 μm mdft. Brush or airless spray. Two stripe coats, the first applied over 1st coat, the second coat applied over the 2nd coat.			
PATCH COATS	Nil			

TABLE 50/2SR: Requirements for Bridges, Parapets, Bearings, CCTV Masts, Cantilever Masts, Steel Lighting Columns and Bracket Arms and other Highway Structures: Protective Systems (continued)

NOTES:

1. Item 168, Polyurethane (two pack) gloss finish may be used in lieu of Item 164 MC Polyurethane semi-gloss finish (two pack Polyurethane gloss finishes shall be less tolerant of moisture and low temperatures during application and curing than MC Polyurethanes and shall therefore only be specified when conditions preclude the formation of moisture on surfaces and when the ambient temperature is likely to be above 5°C during application and the curing period).
2. Types I (M) and II (M) can be combined to allow paint maintenance to proceed when temperature falls and relative humidity increases and for night work.

HEALTH & SAFETY

Polyurethane (two pack) and Moisture Cured Polyurethane paints contain isocyanate and can be injurious to health if not used correctly.

An assessment of the risks and controls for their safe use shall be carried out before use.

TABLE 50/2SR: Requirements for Bridges, Parapets, Bearings, CCTV Masts, Cantilever Masts, Steel Lighting Columns and Bracket Arms and other Highway Structures: Protective Systems (continued)

	III (M) – Extended Cure Epoxy/Polyurethanes	III (M) (alternative) – Extended Cure Epoxy/Polyurethanes
Substrate Type	1 Hot dip galvanizing	2 Hot dip galvanizing
Surfaces prepared to	Bright or sound metal coating	Bright or sound metal coating
1st Coat Item No. Minimum dry film thickness (μm)	 Item 155 or other adhesion promoter –	 Item 121 100
2nd Coat Item No. Minimum dry film thickness (μm)	 Item 121 100	 Item 164,168 or 169 50
3rd Coat Item No. Minimum dry film thickness (μm)	 Item 164,168 or 169 40/50/50	 – –
Minimum total dft of the paint system to be obtained (μm)	175/250μm	175μm
STRIPE COATS	Item 121, 80 μm mdft. Brush or airless spray. One stripe coat in area prepared to clean steel or sound metal coating Applied over 1st coat	
PATCH COATS	Nil	

TABLE 50/2SR: Requirements for Bridges, Parapets, Bearings, CCTV Masts, Cantilever Masts, Steel Lighting Columns and Bracket Arms and other Highway Structures: Protective Systems (continued)

NOTES:

1. Some Item 121 formulations have been developed for direct application to hot dipped galvanised surfaces with excellent adhesion without the need for an adhesion promoter (to be checked with and guaranteed by paint manufacturer).
2. When a light tint gloss is required an extra coat of Item 168 shall be applied. Item 164, Moisture Cured Polyurethane Finish, may be used in lieu of Item 168 to provide a semi-gloss finish tolerant of surface moisture (but not running water) and low temperatures during application and curing.

TABLE 50/2SR: Requirements for Bridges, Parapets, Bearings, CCTV Masts, Cantilever Masts, Steel Lighting Columns and Bracket Arms and other Highway Structures: Protective Systems (continued)

HEALTH & SAFETY

Polyurethane (two pack) and Moisture Cured Polyurethane paints contain isocyanate and can be injurious to health if not used correctly. An assessment of the risks and controls for their safe use shall be carried out before use.

IV (M) – MC/Epoxy/Polyurethane	
Substrate Type	1 Steel
Surfaces prepared to	Clean, bright or Sa2 or St3 quality steel
1st Coat Item No. Minimum dry film thickness (μm)	 Item 160 50
2nd Coat Item No. Minimum dry film thickness (μm)	 Item 116 or 112 –
3rd Coat Item No. Minimum dry film thickness (μm)	 Item 164 or 168 50
Minimum total dft of the paint system to be obtained (microns)	250μm
STRIPE COATS	Item 112, 80μm mdft. Brush or airless spray. One stripe coat in area prepared to clean steel or sound metal coating Applied over 1st coat
PATCH COATS	Nil

NOTES:

1. When a light tint gloss finish shall be required an extra coat of Item 168 shall be applied. Item 164, Moisture Cured Polyurethane Finish may be used in lieu of Item 168 to provide a semi-gloss finish tolerant of surface moisture (but not running water) and low temperatures during application and curing.

HEALTH & SAFETY

Polyurethane (two pack) and Moisture Cured Polyurethane paints contain isocyanate and can be injurious to health if not used correctly.

An assessment of the risks and controls for their safe use shall be carried out before use.

TABLE 50/2SR: Requirements for Bridges, Parapets, Bearings, CCTV Masts, Cantilever Masts, Steel Lighting Columns and Bracket Arms and other Highway Structures: Protective Systems (continued)

Grease paint system for maintenance of an Oleo-resinous system on a zinc metal sprayed coating where there has been extensive breakdown of the paint system over areas where corrosion of the zinc metal coating has started.

Also may be used, subject to the written approval of the Overseeing Organisation as a temporary measure over steel strengthening (additional stiffeners, welding or other measures) on the insides of boxes and to external bridge bearings where loose surface paint has been removed.

V (M) – Grease Paint			
Substrate Type	1 Steel	2 Aluminium metal spray, zinc metal spray or hot dip galvanizing	3 Existing paint coats
Surfaces prepared to	Clean, bright or Sa2 or St3 quality steel	Bright or sound metal coating	Sound finishing coat or last undercoat or other sound paint coats
1st Coat: Grease Paint Penetrating Primer Item No. Minimum dry film thickness (μm)	Item 200 Nominal	Item 200 Nominal	Item 200 Nil
2nd Coat: Grease Paint Undercoat, yellow Item No. Minimum dry film thickness (μm)	Item 201 150	Item 201 150	Item 201 Nil
3rd Coat: Grease Paint Finish, black Item No. Minimum dry film thickness (μm)	Item 201 150	Item 201 150	Item 201 150
Minimum total dft of the paint system to be obtained (μm)	330μm	350μm	160μm
STRIPE COATS	Item 201, 150μm mdft. Brush. One stripe coat in all areas over 2nd coat		
PATCH COATS	Item 201. Brush, over 2nd coat		

TABLE 50/2SR: Requirements for Bridges, Parapets, Bearings, CCTV Masts, Cantilever Masts, Steel Lighting Columns and Bracket Arms and other Highway Structures: Protective Systems (continued)

NOTE:

The total dft of existing coats plus new coats, including patch coats, shall not be less than 400 μm.

Number of patch coats to suit.

Cancelled Clauses Tables And Figures	
Clause No	**Title and Written Text**
	None

APPENDIX 0/2 - CONTRACT-SPECIFIC MINOR ALTERATIONS TO EXISTING CLAUSES, TABLES AND FIGURES INCLUDED IN THIS CONTRACT

Clause No.		Alterations to be made
		Preliminaries
104		**Standards Quality Assurance Agreement Certificates and Other Approvals**
	2	In sub-Clause 2, line 3 Delete "BS EN ISO 9002" and insert "British Standard EN ISO 9001 or British Standard EN ISO 9002 where appropriate and British Standard EN ISO 14001:1996 (Environmental Management Systems)".
	4	In sub-clause 4, after “Appendix B,” insert “apart from the exceptions at the end of this sub-clause,” In sub-clause 4, add new sentences at the end as follows: "All quality management schemes listed in Appendix A shall be applicable to this Contract. For Bridge Refurbishment works undertaken directly by the Operating Company up to a value of £50,000 the Operating Company need not be listed in the Bridgeworks Scheme of the Register of Qualified Steelwork Contractors. In all other respects the Operating Company shall comply with Sector Scheme 20 and shall instigate a quality management system for the execution of steel structures in accordance with BS EN ISO 9001 and the requirements of Schedule 5: Part 1 and shall describe this in a quality plan. All Bridge Refurbishment works undertaken directly by the Operating Company shall be supervised by a Welding Coordinator according to BS EN ISO 14731 who shall be experienced in the type of work being undertaken. For the corrosion protection of the Forth Road Bridge undertaken directly by the Operating Company, the Operating Company need not be registered to National Highways Sector Scheme 19A. In all other respects the Operating Company shall comply with Sector Scheme 19A and shall instigate a quality management system for the corrosion protection of steel bridges in accordance with BS EN ISO 9001 and the requirements of Schedule 5: Part 1 and shall describe this in a quality plan.”
	7	In sub-Clause 7, line 3 Delete "BS EN ISO 9002" and insert "British Standard EN ISO 9001 or British Standard EN ISO 9002 where appropriate and British Standard EN ISO 14001:1996 (Environmental Management Systems)".
120		**Recovery Vehicles For Breakdowns**
	9	Insert in sub-clause 9, after "A copy of each Certificate shall be provided to the Overseeing Organisation not less than 14 days before the commencement of the recovery Operations", the following: "and a copy of each Certificate shall be kept by the Operating Company".

Clause No.		Alterations to be made
	17	Insert in sub-clause 17 new paragraph as follows: "The Operating Company shall assist, when required by the Overseeing Organisation or the Police, in the removal of loads or parts thereof deposited within the Site".
	18	Delete sub-clause 18, and insert the following: "The recovery service shall be provided in accordance with Appendix 32/1,"
	19	Insert in sub-clause 19 new paragraph as follows: "When moving broken down or damaged vehicles, the Operating Company shall take all reasonable measures to prevent further damage to the vehicles."
	23	Insert in sub-clause 23 new paragraph as follows: "Drivers shall be informed that they must make their own arrangements for further assistance."
	26	In sub-clause 26 delete: "The Contractor shall submit weekly to the Overseeing Organisation:" and replace with: "The Operating Company shall maintain at the Central Office:"
	32	Insert in sub-clause 32: After "Vehicle and Operator Services Agency (VOSA) approved testing station,…", the following: "or the Freight Transport Association, conducted not less than 14 days nor more than 28 days before the vehicles are required," Delete "annually on the due anniversary of the inspection" and replace with: "at intervals not exceeding six months, …" Add a new paragraph as follows: "A copy of each inspection report shall be kept in: (i) the Operating Company Central Office, (ii) the recovery vehicle."
	36	Insert in sub-clause 36: After "The vehicle and all retroreflective markings shall be maintained in a good and clean condition." The following "Where the recovery vehicle forms part of the Operating Companies fleet the livery shall be in accordance with Appendix 1/75."

Clause No.		Alterations to be made
	37	In sub-clause 37: After "FREE RECOVERY TO END OF ROADWORKS" insert " OR BRIDGE"
	52	Insert in sub-clause 52, after "The contractor shall …", the following: "provide suitable mess and other welfare arrangements for the recovery operatives which shall: (i) be in the form of temporary accommodation, (ii) be located at the recovery vehicle station, and shall …"
		SITE CLEARANCE
201		**Clearing**
	3	Delete Sub-Clause 3 and replace with: "Disused chambers located under the road pavement, verge or central reserve shall be demolished to a depth of 0.5 metres below formation, properly cleaned out, and filled or capped to meet the requirements of the relevant roads authority. To permit free drainage holes of 76 millimetre diameter (minimum) shall be made at 500 millimetre centres over the whole areas or over 10 per cent of the whole area (whichever is more onerous), of slabs basements etc., which are not removed and which are liable to hold water."
	6	In sub-clause 6, after paragraph 2, add new paragraph as follows: "In the case of items such as stone, copes, granite setts, kerbs and concrete paving, stacking and protection shall be achieved by palletising."
	7	Delete sub-clause 7 and replace with: "7. Topsoil excavated for any purpose shall be reserved and protected for re-use. Multiple handling of topsoil shall be kept to a minimum. After completion of the work the topsoil shall be spread over the disturbed ground, any surplus being disposed of as described in clause 602".
204		**Hazardous Materials**
	1	In sub-clause 1, after "…in Site clearance", insert "or any other work on the Unit including Incident Response".
		DRAINAGE AND SERVICE DUCTS
507		**Chambers**
	19	Add the following new sub-clauses 19-23: The frame shall be haunched with mortar to within 40mm of its top. The remaining 40mm shall be painted with joint bitumen.

Clause No.		Alterations to be made
	20	The remainder of the void around the frame shall be filled with either bitumen macadam or rolled asphalt surfacing material to match the surrounding surface. The surface course shall be laid in a uniform layer of the specified thickness and shall include any surface treatment necessary to match the surrounding surface. Such treatment shall comply with the relevant clauses in this Specification.
	21	Covers and frames shall be broken-out, adjusted, reinstated and able to be trafficked in the course of one day.
	22	In certain circumstances, for example if the Site is to be overlaid, the Operating Company may adjust covers and frames to levels above the adjacent surface. The covers and frames shall be surrounded by a temporary ramp in bituminous material to a gradient not steeper than 1:10. The Operating Company shall provide warning signs in accordance with clause 117.
	23	Draw pit chambers for electrical supply cables shall be as referred to in Appendix 5/2.
521		**Water Jetting and Suction**
	9	In sub-clause 9, after (vi), insert (vii): "(vii) the suction facility shall be provided by a liquid ring exhauster and shall have an air flow of at least 70 cu m per minute and 380mm Hg vacuum through a 200mm boom mounted pipe with a debris tank capacity of at least 5.5 cu m."
606		**Watercourses**
	1	In sub-clause 1, after "ditches," insert "drainage grips".
	5	Add new sub-clause 5: "The cutting of new drainage grips shall be to the profiles required to deal with the discharge of surface water from the carriageway. All arisings from the cutting of new drainage grips shall be removed to a licensed disposal facility unless it is appropriate to spread and level the arisings on the verge. The grass shall be trimmed for a distance of 1 metre on either side of the grip."
610		**Fill to Structures**
	1	In sub-clause 1(iv): delete "unless otherwise required in Appendix 6/6".
	2	In sub-clause 2 line 2 delete: " 6P, 7A and 7B".

Clause No.		Alterations to be made
		In sub-clause 2 lines 3 and 4 delete: ", in the locations described in Appendix 6/6".
	3	In sub-clause 3 lines 2 and 3 delete: "6P, 7A and 7B".
	6	In sub-clause 6 lines 1 and 2: delete: "6P and 7B"
611		**Fill Above Structural Concrete Foundations**
	1	In sub-clause 1 (i): delete "6P, 7A or 7B". In sub-clause 1 (ii) delete whole sub-clause.
920		**Bond Coats, Tack Coats and other Bituminous Sprays**
	1	In sub-clause 1: Delete last sentence and replace with "In the event that no British Board of Agrément HAPAS Certificates have been issued in respect of any proprietary bond coats, tack coats, or other bituminous sprays that comply with Sub-Clauses 2 to 12 of this Clause and the requirements specified in Appendix 7/4, detailed proposals accompanied by quality plans and method statements appropriate to the project shall be submitted to the Overseeing Organisation for consent."
930		**EME2 Base and Binder Course Asphalt Concrete**
	6	Add to end of sub-clause 6: "EME2 shall be laid with uniform compaction over the whole Lane width by a paver fitted with a high density, pre-compaction screed."
	8	Delete existing sub-clause 8 and replace with: "Compaction shall be substantially completed before the temperature falls below 125 °C. Limited rolling without vibration may be carried out below this temperature to improve the finish. If EME2 starts to shove or tear during compaction, compaction must be stopped. Compaction can recommence if material temperature drops and no material movement is observed."
	14	Delete existing sub-clause 14 and replace with: "For the material from each mixing plant, a pair of cores shall be taken from the wheel-tracks every 250 metres laid, or part thereof, per paver, and the void content shall be determined in accordance with BS 594987, clause 9.5.1.3."
	16	Delete existing sub-clause 16 and replace with: "For the material from each mixing plant, a pair of cores shall be taken every 250 metres laid, or part thereof, centered 100mm from the final joint position or at any open longitudinal joint and the air void shall be determined in accordance with BS 594987, clause 9.5.1.3."

Clause No.		Alterations to be made
	20	Add to end of sub-clause 20: "Two copies of the final in situ core air void results shall be passed to the Overseeing Organisation within 7 Days."
942		**Thin Wearing Course Systems**
	14	In sub-clause 14 delete "for a period of two years" and insert "for a period of five years".
		Kerbs Footways And Paved Areas
1101		**Precast Concrete Kerbs Channels Edgings and Quadrants**
	3	In sub-clause 3 lines 13 and 14: delete "At expansion joints in bridge decks the kerb joints shall be as described in Appendix 11/1."
1102		**In Situ Asphalt Kerbs**
	2	Delete sub-clause 2.
1103		**Freestanding In Situ Concrete Kerbs Channels and Edge Details**
	1	In sub-clause 1, line 8: delete all text after "dragging" and add: "The longitudinal surface regularity shall not deviate by more than 5mm in 3 metres when checked with a 3 metre straight edge."
1104		**Footways and Paved Areas (Precast Concrete Flags and Natural Stone Slabs)**
	2	In sub-clause 2, lines 3 and 4: delete "with a bond as described in Appendix 11/1".
1106		**Footpaths and Paved Areas (In Situ Concrete)**
	4	Add new sub-clause 4: "Synthetic fibres shall be added to the concrete at the concrete mixing plant at a rate of 0.9kg per cubic metre of concrete as and when specified by the Overseeing Organisation."
1107		**Footways and Paved Areas (Concrete Block Paving)**
	4	Add new sub-clause 4: "When replacing an existing area of block paving the type and colour of the blocks and the pattern used shall match existing."
1108		**Footways and Paved Areas (Clay Pavers)**
	4	Add new sub-clause 4: "When replacing an existing area of paving the type and colour of the blocks and the pattern used shall match existing."

Clause No.		Alterations to be made
		TRAFFIC SIGNS
1209		**Covering of Permanent Traffic Signs**
	7	Add new sentence to sub-clause 7 as follows: "Any damage caused as a result of the temporary covering of permanent traffic signs shall be rectified at the Operating Company's expense."
1213		**Road Studs**
	9	Add new sub-clause 9: "New or replacement thermoplastic road studs shall be installed as CHART node points as and when directed by the Overseeing Organisation. Existing metal CHART node points shall be removed with minimum damage to the carriageway which shall be reinstated using filled bitumen or bituminous instant repair material."
1301		**General**
	1	Delete existing sub-clause 1 and replaced with: "This Series shall apply to the design, supply and installation of lighting columns and brackets and CCTV masts and cantilever masts for traffic signals and/or speed cameras (hereafter called cantilever masts) within the following dimensional limitations: (i) For aluminium lighting columns: (a) aluminium columns shall not exceed 15 metres nominal height, and (b) columns shall be tapered with an integral bracket. The maximum bracket outreach shall be no greater than 0.5 metres. (ii) For steel columns: (a) post top columns not exceeding 20 metres nominal height, these columns shall be of continuously tapered folded steel construction, and (b) columns with brackets not exceeding 18 metres nominal will have a maximum bracket outreach of 0.5 metres. NOTE: Only where individual columns are being replaced within an existing lighting scheme will outreaches greater than 0.5 metres be accepted. Generally, only to maintain consistency in such installations can columns other than tapered folded sheet steel be used. In these situations columns of a similar design to those in the existing lighting scheme can be used. (iii) For glass fibre reinforced plastic lighting columns: (a) unless specified otherwise by the Overseeing Organisation columns not exceeding 10 metres nominal height, and (b) bracket projections shall not exceed 0.5 metres. (iv) For steel CCTV masts:

Clause No.		Alterations to be made
		(a) post top masts not exceeding 25 metres nominal height. (v) For steel cantilever masts: (a) nominal height not exceeding 8.5 metres, (b) cantilever projection not exceeding 8.5 metres, and
		(c) bracket projections for cantilever masts not exceeding 0.25 x nominal height or 3 metres whichever is the lesser. (vi) For Hinged Columns: (a) nominal height shall not exceed 12 metres, (b) bracket projections shall not exceed 0.5m, and (c) where hinged columns greater than 8 metres high are installed these shall incorporate a suitable raising and lowering mechanism. For all new installations it is a requirement of the Overseeing Organisation that lighting columns shall be continuous taper, be manufactured from aluminium, the column root to be protected by an inner and outer polymer thermally bonded sheath to a height of 250mm from the bottom of the column, the columns to have an integral 0.5m outreach and flush access doors. Sign support posts shall be of tubular aluminium or aluminium lattice construction. The nominal height of a flange column or mast is taken as the distance between the underside of the flange plate and the highest point of the mast. See Fig. 1. of BD88 (DMRB 2.2.13)."
	8	Insert additional sub-clause 8: "Unless protected by an existing Vehicle Restraint System (VRS), columns shall be, designated Passively Safe or otherwise located so as to require no protection in accordance with TD19/06. Where passively safe columns are used they shall conform to testing as set out in British Standard EN 12767:2007. Installation shall always be in compliance with TD19/06."
	9	Insert additional sub-clause 9: "Non-hygroscopic base compartment back-board not less than 15mm thick and of a sufficient size to accept the selected cut-out shall be positioned internally opposite the access door. The baseboard shall be securely fixed to the inside of the column. All screws and fixings used for the attachment of equipment and components to this wooden back-board shall be of stainless steel."
	10	Insert additional sub-clause 10: "Lighting columns shall be manufactured with a flush mounted access door correctly positioned relative to the integral bracket. This position ensures that access through the door can only take place when the operative is facing the oncoming traffic."
	11	Insert additional sub-clause 11: "The column cable entry slot, which shall be positioned on the face to the right of the column access door opening, shall have minimum dimensions

Clause No.		Alterations to be made
		of 150mm x 75mm with the lower edge of the slot 600mm below ground level. The cable entry slot shall be free from irregularities and burrs."
	12	Insert additional sub-clause 12: "Each column shall be fitted with an 8 mm (minimum) diameter earth terminal complete with two plain washers and one full nut and one locking nut. These items shall be corrosion resistant and compatible with the column material. Earth terminals shall be readily accessible through the door opening and located such as to minimise the risk of injury to persons accessing them while undertaking installation and maintenance."
	13	Insert additional sub-clause 13: "All electrical and similar joints made onto the column structural aluminium and column access door shall be such as to eliminate or protect against corrosion resulting from contact between dissimilar metals. The Operating Company is required to adhere to such aspects of the guidance provided in PD 6484 as it relates to dissimilar metals in contact with aluminium. The selection of electrical earthing components shall also comply in this respect and other respects with the requirements of BS 7430. All access doors shall be fitted with a bonding earth conductor marginally longer than the retaining chain or wire. Termination of the bonding earth conductor shall use components manufactured from compatible material."
	14	Insert additional sub-clause 14: "The flush fitting weatherproof single access door shall provide protection no less than IP33 and shall be free from any irregularities, burrs or sharp edges likely to cause injury. Unless specifically required by this Contract each column access door shall have at least one lock. All locks shall use a triangular type key. The number of column door keys shall be supplied shall be 10% of the number of columns erected subject to a minimum of three keys. All column access door keys shall be manufactured from metal and be of an adequate handling size."
	15	Insert additional sub-clause 15: "On completion of the installation, all door locking components shall be coated with suitable corrosion inhibitor grease providing lubrication and protection from seizure and general deterioration."
	16	Insert additional sub-clause 16: "Lighting column access doors shall be retained by stainless steel chain or braided stainless steel wire. Such retaining chain or wire shall be compatible with the column material and be held captive by fixings similarly manufactured from compatible material. Chains shall be a minimum gauge of 4mm and be long enough to allow the column access door to be rested completely on the ground whilst removed. All removable access doors shall be interchangeable with access doors of similar columns without the need for adjustment."
	17	Insert additional sub-clause 17: "Where columns are mounted on structures and behind parapets, the access doors shall be positioned such that the access opening is fully

Clause No.		Alterations to be made
		accessible above the upper height of the protective parapet and facing the maintenance personnel."
	18	Insert additional sub-clause 18: "Flange plate columns shall be set vertical on the foundation bases prepared for them. To ensure the column is set vertical compatible metal shims shall be used for adjustment. The nuts and exposed bolts shall be made suitably tight and then coated with protective paste and suitable protective tape. All fixings shall be compatible with the column material."
	19	Insert additional sub-clause 19: "Where the column flange is not in accordance with BS EN 40-2 the Operating Company shall liaise with the Contractor responsible and agree details of the flange sizes and fixing centres. The Operating Company shall implement a design based upon the agreed flange fixing and provide the design to the column manufacturer."
	20	Insert additional sub-clause 20: "Where separate bracket arms are used such bracket arms shall be of the same material as the column and fixed in accordance with the manufacturer's written instructions to prevent rotation using an anti-rotational device."
	21	Insert additional sub-clause 21: "Road lighting columns and brackets shall be manufactured, located and erected in compliance with this Series, the 1400 Series and all relevant requirements."
	22	Insert additional sub-clause 22: "Where wall brackets and associated service boxes are installed they shall, where applicable, match existing items."
1302		**Design of Lighting Columns, Brackets, CCTV Masts, Cantilever Masts, Foundations, Anchorages and Attachment Systems**
	1	Delete existing sub-clause 1 and replace with: "Lighting columns, brackets, CCTV masts, cantilever masts, the foundations of both planted columns and columns and masts with flange plates, and the anchorages and attachment systems for columns and masts with flange plates shall be designed to comply with the requirements of BD 94/07 of the DMRB and the technical approval scheme adopted by the Overseeing Organisation. The Operating Company shall similarly comply with British Standard PD 6547:2004+A1:2009 and the referenced standards within it. The Operating Company shall use the soil type information as described in Appendices 13/1. The Operating Company shall design foundations for all columns and masts detailed in this Contract. The Operating Company shall submit to the Overseeing Organisation a copy of all design calculations, variations, certification and supporting information at least two weeks prior to delivery and shall include with such Records confirmation that such Records have been checked in accordance with the requirements of BD 97 and BD 2 to ensure compliance with the required standards and check Certificates issued for lighting

Clause No.		Alterations to be made
		columns, brackets, CCTV masts, cantilever masts and foundations. The Design of the foundations shall be appropriate to the soil types encountered on Site, as identified in Appendices 13/1, 13/4 and 13/7. The Operating Company shall establish the soil types on Site and submit, to the Overseeing Organisation for its acceptance, lighting column foundation details appropriate to the conditions found and in accordance with the requirements of British Standard EN 40.
		The excavation to accommodate planted root columns shall not exceed a diameter greater than twice the diameter of the column root. Where a separate bracket is used for compatibility with existing columns the column shall be erected without the bracket in place and placed centrally in the excavation. Where separate brackets are used these shall not be erected on the column until such a time as the foundations have cured. Alternative foundations can be used with the prior agreement of the Overseeing Organisation."
	2	Aesthetic Requirements Delete existing sub-clause 2 and replaced with: "The aesthetic design of lighting columns, including those with bracket arms, shall be submitted by the Operating Company to the Overseeing Organisation for consideration and approval. The design of lighting columns and luminaires including those with bracket arms shall comply with the general advice given in BS 5489-1 relating to the appearance of lighting installations both by day and by night from the viewpoint of both the road and the surrounding neighbourhood. Where required to be incorporated into an existing scheme the lighting column silhouette must use the same or near similar bracket angle and generally be compatible with existing equipment."
1303		**Data Sheets**
	3	Insert additional sub-clause 3: "The Operating Company shall within one month of the commencement of the work and prior to placement of any orders for materials, submit to the Overseeing Organisation for approval, triplicate copies of completed Appendix 13/2 Data sheets for each type lighting column."
1304		**Identification and Location Markings**
	1	Delete existing sub-clause 1 and replace with: "All lighting columns and brackets, CCTV masts and cantilever masts shall carry unique identification marks indicating the name of the manufacturer, year of manufacture, the unique product code and other relevant information to enable details of the lighting column and bracket, CCTV masts and cantilever masts to be determined by reference to the appropriate Lighting Column and Bracket, CCTV masts and cantilever masts Data Sheets. All such masts, columns and brackets shall be correctly labelled confirming conformance with the appropriate directive(s) and or Legislation."

Clause No.		Alterations to be made
	2	Delete existing sub-clause 2 and replace with: "The column and mast identification marks shall be permanent and legible and be made clearly visible in one of the following ways: (i) on a permanent fixed label, or (ii) hard stamped, or (iii) formed into the material of the column/mast external face only. For hard stamped identifiers, the mark shall be located immediately above the access door and for label identification this shall be placed immediately inside the base compartment: it shall not be located on the door. All hard stamping shall be carried out in a manner that will not induce any stresses into the material of the column/mast."
	3	Delete existing sub-clause 3 and replaced with: "Where separate brackets are approved for use by the Overseeing Organisation the bracket identification mark shall also be permanent and legible and be either: (i) hard stamped, or (ii) formed into the material of the bracket arm and on either the luminaire spigot or the underside of the bracket arm adjacent to the column shaft or the wall or pole mounting plate. The mark will be on an external face only."
	4	Delete existing sub-clause 4:
	5	Delete existing sub-clause and replaced with: "In addition, location/identification labels for compliance with DMRB requirements and electrical regulatory inspection and maintenance purposes shall be applied to each lighting column as described in the Overseeing Organisation guidance document LDS8001_A.2 *Roadside Electrical Asset and Lighting Identification System*. The identifying code for use on the labels shall be provided by the Operating Company and agreed with the Overseeing Organisation. The Operating Company shall provide the Overseeing Organisation with Site design layout drawings and electrical schematics. All Records relating to the lighting columns shall include the identifying code."
1308		**Handling, Transport and Erection**
	4	Delete existing sub-clause 4 and replace with: "Columns and masts shall be installed in accordance with the manufacturer's instructions and all requirements of the Specification."
	6	Insert additional sub-clause 6: "All verge located lighting columns shall be installed such that the door is facing away from the oncoming traffic. Alternative access door orientation must be consented to by the Overseeing Organisation. Where consent for such alternative orientations is to be sought this must form part of the initially proposed project design."

Clause No.		Alterations to be made
	7	Insert additional sub-clause 7: "All proprietary materials shall be stored in accordance with the manufacturer's written instructions."
1401		**General**
	1	Insert additional new first paragraph to sub-clause 1: "The lighting installation shall not be operationally energised until the Operating Company has complied with the Electricity at Work Regulation 1989 and provided to the Overseeing Organisation all completed British Standard 7671 Inspection and Testing Certificates. In addition to the provision of the British Standard 7671 Inspection and Testing Certificates the Operating Company shall provide a written record to the Overseeing Organisation stating that these Certificates have been audited for correct and full completion by a resource competent to undertake such audits." Delete existing first paragraph of sub-clause 1 and replaced with: "Materials equipment and workmanship required under this Contract shall comply with British Standard 7671 Regulations for Electrical Installations (the IEE Wiring Regulations) and the applicable regulations of the "distribution network operator (DNO)" providing the supply. The installation and maintenance of electrical apparatus and cabling for road lighting and illuminated traffic signs shall comply with the quality management scheme detailed in Appendix A Volume 1 of this Specification. The Operating Company shall incorporate into work procedures the contents of Engineering Recommendation G39/1 `Model Code of Practice covering Electrical Safety in the Planning, Installation, Commissioning and Maintenance of Public Lighting and Other Street Furniture'." Delete existing third paragraph of sub-clause 1 and replaced with: "In addition to the requirements of sub-clauses 10.2 and 10.3 of G.39/1, each Competent Person as defined in G.39/1, clause 2, shall be provided by the Operating Company with not less than one copy of the above Certificate, duly completed and signed as Approved. Such Certificate(s) shall be retained and be available at all times for inspection on the Works on request by the Overseeing Organisation. A formal Work Allocation record shall be kept by the Operating Company to enable work carried out by individual operatives and the responsible supervisor to be identified. All operatives and supervisors shall hold a valid Electrotechnical Certification Scheme (ECS) identity card. Notification of the details of all such cards shall be submitted to the Overseeing Organisation 14 days prior to commencement of the work."

Clause No.		Alterations to be made
		Insert additional final paragraph to sub-clause 1: "The Operating Company shall ensure that only competent persons as defined in the guidance note *LDS8014_Competency – Competency requirements relating to work on Transport Scotland's Roadside Electrical Assets and Lighting* shall be employed on work that falls within the scope of this series. All competent persons shall be registered with the Highway Electrical Registration Scheme (HERS). In addition Authorised Persons shall be registered as specified in the "Highway Electrical Registration Scheme (HERS) Handbook."
	2	Delete existing sub-clause 2(iv) and replaced with: "Electrical Equipment for Lighting Units shall consist of the following as described in this Contract: luminaires, photo-electric control units (PECUs), shorting plugs, lamps, time switches, ballasts, ignitors, starters, capacitors, cut-outs, fuses, fuse holders, miniature circuit breakers (MCBs) and Light Emitting Diode (LED) drivers." Delete existing sub-clause 2(v) and replaced with: "In this Series the "network" is the electrical distribution network from the DNO cut-out to the Lighting Units. This includes feeder pillars, cabinets, housings and similar enclosures that form part of the installed electrical distribution network."
	3	Delete existing sub-clause 3 and replaced with: "Each network shall operate on a nominal single phase 230V ac, - 6% to +10% or three phase 400V - 6% to +10% at a frequency of 50Hz ±1%. It will be the Operating Company's responsibility to ensure that the equipment supplied will operate correctly at the voltage and frequency available at the point of use and ensure that the voltage at the point of use is within the requirements of the BS 7671 Regulations. The Operating Company's designer shall obtain a declaration from the DNO, provided in accordance with the Electricity Safety, Quality and Continuity Regulations in which the nominal voltage and frequency of the supply shall be specified along with the permitted tolerances. Further guidance on requesting electricity supplies is contained within *LDS8006Supply – Electricity Supplies to Roadside Electrical Assets and Lighting*. TN-C distribution shall not be used for any part of any new road lighting electrical distribution network. Only where a 3-phase supply is used to energise high mast lighting and similar loads shall a 3-phase supply be distributed within the lighting installation as 3-phase. Where a 3-phase supply has been provided by the DNO for circuits other than high mast lighting and similar the 3-phase supply shall, unless otherwise consented to by the Overseeing Organisation, not be distributed as a 3-phase supply but only as three separate single phase supplies. Such single phase supplies derived from a 3-phase supply shall not be considered as being an 'individual' or 'separate' single phase supplies.

Clause No.		Alterations to be made
		Unless specifically consented to by the Overseeing Organisation lighting supplies shall not be used to supply equipment other than road lighting and related circuits. Road lighting circuit electricity consumption shall be considered as including maintenance sockets and similar items housed within lighting pillars. Unless specifically consented to by the Overseeing Organisation anti-condensation heaters shall not be fitted within pillars and distribution cabinets."
	4	Delete existing sub-clause 4 and replace with: "The Operating Company's Designer shall provide sufficient access and area within electrical equipment to allow the electricity supplier to install their service connection and associated cut-out. This shall be considered as the origin of the installation as defined in British Standard 7671."
	5	Delete existing sub-clause 5 and replaced with: "This dedicated feeder pillar shall be provided for the Overseeing Organisation's lighting network. Distribution feeder pillars shall be also provided as required. Unless otherwise consented to by the Overseeing Organisation supplies provided to electrical equipment for third parties, internal and external to the Overseeing Organisation, shall not be connected to the Overseeing Organisation's lighting network. Any such supplies so provided shall conform to the Overseeing Organisation's specific instructions as specified in the Overseeing Organisation guidance document *LDS8006_ - Electricity Supplies to Roadside Electrical Assets and Lighting*. Before making any form of electrical connection into any part of the Overseeing Organisation's lighting network consent shall be obtained from the Overseeing Organisation 21 days prior to the connection being made."
	6	Insert additional sub-clause 6: "The Operating Company shall fit ID labels and conspicuity bands in accordance with the Overseeing Organisation guidance document *LDS8001_ Roadside Electrical Asset and Lighting Identification System*."
1402		**Site Records**
	1	Delete existing sub-clause 1 and replace with: "In accordance with the requirements of the Electricity at Work Regulations the Operating Company shall, on the completion of the electrical work, provide a set of as-installed drawings or transparencies showing as a minimum the position and identification mark (including luminaire type, modification status, lamp setting, lamp type and serial numbers) of equipment requiring electrical connections, ducts, underground cables and joints and the type and depth of cables. The Operating Company shall also supply test Certificates and operation and maintenance manuals. The general requirement for information to be included within the lighting section of the health and safety file is contained within *LDS8004*–

Clause No.		Alterations to be made
		Roadside Electrical Assets and Lighting Health & Safety File Requirements with Model Forms.
	2	Delete existing sub-clause 2 and replace with: "The Operating Company shall amend drawings provided by the Overseeing Organisation whenever any part of the installation shall be amended or extended. Test Certificates pertaining to the part of the installation that has been modified shall be completed and passed to the Overseeing Organisation for consent. Locations of Constructional Plant and equipment shall be referenced in accordance with the Trunk Road network referencing system."
	3	Delete existing sub-clause 3 and replace with: "As-built drawings shall be produced by the Operating Company showing the network and all lighting units in accordance with this clause. The Operating Company shall complete the as-built drawings in AutoCAD ™ format and provide the drawings in AutoCAD. As-built drawings shall include both geographical and schematic drawings: (i) a schematic distribution layout drawing indicating the distribution arrangement of each private cable network, (ii) a schedule of abandoned cables including location, (iii) duct and cable location offsets taken at 20m intervals where cables maintain a steady line, and at 5m intervals where the line of the cable varies. Cable records shall be determined from kerb lines or fence lines, and (iv) the geographical and schematic drawing shall detail the ID label attached to pillars and lighting units. The geographical drawing shall detail the accurate location of all lighting units, duct location (including size and number), cable runs (including cable size), pillars, all chambers and the electricity supply location. The DNO 'supply point ID No.' must be obtained from the electricity supplier and included on the drawing. Column height, material lantern type, lamp wattage, Lit Sign Units TRGD ref. No, type and wattage of sign lighting unit shall be included on the drawing."
	4	Delete existing sub-clause 4 and replace with: "Operational Records shall include: (i) maintenance or operating manuals for installed equipment, (ii) inspection and test Certificates in accordance with British Standard 7671, and (iii) Data required for inventory purposes in the format stipulated in the Trunk Road Inventory Manual and the Scottish Ministers' Requirements."

Clause No.		Alterations to be made
1403		**Location of Lighting Units and Feeder Pillars**
	1	Delete existing sub-clause 1 and replace with: "The location of feeder pillars shall be in accordance with the Operating Company's submitted Design. The Operating Company's Design shall fully consider all relevant requirements including inter alia such arrangements as to ensure safe maintenance access to the pillar. The exact location will be agreed on Site before commencement of any related ground work. The Operating Company shall be responsible for recording and documenting all aspects of the final Site layout and the as-installed equipment."
	3	Insert additional sub-clause 3: "The location of cabinets or pillars provided to house the electricity supplier's equipment shall be consented to by the Overseeing Organisation prior to its installation."
1407		**Luminaires**
	1	Delete existing sub-clause 1 and replace with: "Luminaires fitted with integral control gear shall have a fuse holder incorporating direct touch protection adjacent to the terminal block with a cartridge fuse protecting each set of control gear."
	2	Delete existing sub-clause 2 and replace with: "Luminaires for road lighting shall comply with British Standard EN 60598-2-3 and the following: (i) the mounting arrangement shall provide for a close fitting between the luminaire and the column, making use of a two or more bolt, fixing arrangement, (ii) tilt angle adjustment shall be integral to the luminaire and shall apply to both top and side fixing arrangements. The adjustment shall allow for a minimum of three tilt angles including 0deg. +5deg. and +10 degrees, (iii) the internal arrangement of the luminaire shall consist of separate control gear and lamp compartments. These compartments shall be arranged to provide for the separate sealing of the optical system (lamp housing) and control gear compartment. Both compartments shall have a degree of external sealing and sealing between each other no less than IP66, (iv) luminaire to be used for group control shall be fitted with a NEMA socket and this shall be located in the canopy. The control column shall be sited immediately adjacent to the control pillar and a PECU fitted into the NEMA socket, (v) meet the structural design and aesthetic approval requirements of clause 1302. The external finish shall be to BS 4800 RAL9007 Silver,

Clause No.		Alterations to be made
		(vi) a range of luminaires of varying rating shall be available in a common style/design, (vii) curved glass shall be manufactured from toughened safety glass. Flat glass shall only be used in the vicinity of railways, airfields and navigable waterways or with the consent of the Overseeing Organisation. Luminaires shall be of the full-cut-off/low-threshold increment type as consented to by the Overseeing Organisation, (viii) Electronic ballast units shall be provided in luminaires rated up to and including 400W and shall be suitable for operation over the input voltage range of 210-250 Volts. Electronic ballasts shall incorporate over-temperature protection and have a power factor of 0.95 (lagging/leading) or greater. Unless otherwise consented to by the Overseeing Organisation, all replacement lamp control gear shall be of electronic type, DALI compatible, enabled and accredited, capable of being controlled via a lighting central management system, capable of implementing set dimming/trimming control regimes autonomously, and be ELEXON approved. Prior to delivery of any luminaire using electronic control gear the Overseeing Organisation shall be provided, by the supplier, with a 'statement of compatibility'. This statement shall detail and confirm that the electronic control gear being supplied is capable of operating over the temperatures range to which it will be exposed in use within the luminaire housing and that the lamp and control gear are fully compatible. The 'statement of compatibility' shall indicate that the testing regime to which the equipment has been exposed, (ix) ballast units shall have a power factor no less than 0.85, (x) luminaires shall incorporate some form of anti-condensation vent or similar measures to minimise moisture build-up within the luminaire, (xi) all luminaires shall operate correctly over the temperature range of -25deg. C to +35deg. C, (xii) luminaires may be Class I where the luminaire has an integral earth terminal linked to all exposed metalwork or Class II where there is no earth terminal provided for connection of the luminaire's exposed metalwork to the circuit protective conductor. Fortuitous earth connection provided by connection to mechanical fixings shall not be relied upon, (xiii) safe access to the lamp and control gear enclosures for maintenance purposes shall require a tool. Doors shall be hinged and include a safety catch, (xiv) luminaire housings shall be manufactured from corrosion resistant die-cast aluminium suitable for use in their intended environments including locations directly adjacent to the sea, and similar salt-laden locations,

Clause No.		Alterations to be made
		(xv) any electrical wiring that could be subjected to heat shall be fitted with additional heat insulating sleeving, (xvi) luminaires with remote control gear shall not be used unless previously agreed with the Overseeing Organisation, and (xvii) luminaires shall conform to the requirements of the appropriate sections of the Restriction of the Use of certain Hazardous Substances in Electrical and Electronic Equipment Directive and the Waste Electrical and Electronic Equipment Regulations 2006."
	3	Delete existing sub-clause 3 and replace with: "Traffic sign luminaires shall comply with BS 873-5 and the following: (i) luminaires shall use low energy, high efficiency lamps with electronic control gear, (ii) traffic sign luminaires shall be manufactured from cast aluminium unless otherwise specified, (iii) the external finish shall be to British Standard 4800 RAL7000. External sealing shall be to no less than IP54. The construction shall be suitable for use in all environments including directly adjacent to the sea at ferry terminals and in similar salt-laden locations, (iv) for overhung illumination of a sign:

Clause No.		Alterations to be made
		(a) the mounting arrangement of the luminaire(s) shall incorporate a vandal and wind loading resistant anti-rotational support fixing capable of accommodating all commonly used post diameters, (b) the sign lighting luminaire(s) shall provide efficient illumination of the sign, (c) all luminaires shall include integral control gear which shall be mounted on a single readily removable tray, (d) suitable arrangements must be incorporated to prevent un-necessary light spillage, (v) for up-lighter illumination of a sign: (a) the mounting arrangement of the luminaire(s) shall incorporate a vandal and wind loading resistant anti-rotational support, (b) the sign lighting luminaire(s) shall provide efficient illumination of the sign, (c) all luminaires shall include integral control gear, (d) suitable arrangements must be incorporated to prevent un-necessary light spillage, (vi) for internally illuminated 'light box' and electroluminescence signs, the signs shall conform to all applicable standards in relation to their use including background light intensity, (vii) access doors into lamp and control gear compartments on all luminaire types shall be hinged and tamperproof, (viii) the mean sign luminance shall be Category l of British Standard 873-5 and use high efficiency lamp(s), (ix) the impact strength shall be Category 1 of British Standard 873-5, sign lighting luminaires shall conform to the requirements of the appropriate sections of the Restriction of the Use of certain Hazardous Substances in Electrical and Electronic Equipment Directive and the Waste Electrical and Electronic Equipment Regulations 2006."
1409		**Photo-electric Control Units (PECUs)**
	1	Delete existing sub-clause 1 and replace with: "Photo-electric control units (PECUs) shall comply with British Standard 5972:1980 and British Standard EN 60068 for vibration and certified to EN 50081-1 EMC Emissions and to EN 50082-1. The PECU shall incorporate synchronous switching technology and be of one-part construction."
	2	Delete sub-clause 2(i) and replace with: "be factory fitted in NEMA socket and secured as appropriate to the road lighting luminaire canopy." Insert additional sub-clauses in sub-clause 2: (i) be protected against mains borne surges and spikes,

Clause No.		Alterations to be made
		(ii) be of an electronic type with a switching level of 70 Lux with switching differential ratio of 1:0.5 negative. The photoelectric sensor shall have zero sensor shift over a five year period, (iii) have a power consumption of no more than 0.25Watts with a uniform operating temperature range of –25deg. C to +50deg. C, (iv) be able to switch a continuously rectified circuit of less than 20Watts where used to control contactors, (v) date stamped and have a manufacturer's guarantee of at least 6 years, (vi) be designed so that in the event of a fault occurring in the unit they fail in the ON position.
	3	Delete existing sub-clause 3 and replace with: "Single and multi-bracket lighting circuits shall be group switched under the control of the group PECU. Such control shall include provision for remotely switched or time switched lighting control."
1412		**Ballasts**
	1	Delete existing sub-clause 1 and replace with: "Ballasts and other lamp control gear, including LED lamp drivers shall be electronic and comply with Clause 1407. Ballasts shall comply with British Standard EN 61347-1, British Standard EN 61347-2-1, British Standard EN 61347-2-8, British Standard EN 61347-2-9 and British Standard EN 60921 or British Standard EN 60923 as appropriate and be tap selected to the specified operating voltage of the network. Lantern control gear shall be rated at 300volts and thermally protected with super imposed pulse ignitor. Electronic ballasts and LED Driver circuits shall be capable of operating over a range of input voltages 210-250 Volts without any form of tap selection. The terminals shall be indelibly marked to indicate all wiring connections and operating voltages."
1416		**Cut-outs, Fuse Holders, Fuses and Miniature Circuit Breakers (MCBs)**
	1	Delete existing sub-clause 1 and replace with: "Cut-outs, fuse holders and MCBs shall have moulded plastic drip-proof housing to IP34 or above. This requirement applies to the device when installed in a normal operational orientation and fully assembled."
	2	Delete existing sub-clause 2 and replace with: "All single phase road lighting cut-outs shall be BS 7654 and double-pole ensuring both phase and neutral is broken by the removal of the fuse carrier. An earth terminal shall be provided within the cut-out enclosure. The continuity of any earth path shall not be broken by the removal of the cut-out fuse carrier."
	3	Delete existing sub-clause 3 and replace with:

Clause No.		Alterations to be made
		"Terminals shall be sufficient for the conductors. They shall be clearly labelled to differentiate circuits and phases."
	4	Delete existing sub-clause 4 and replace with: "When fuses are intended to be used as isolating devices, no special tools shall be necessary to extract the fuse from its carrier to achieve disconnection. However some method of then securing the device in the disconnected (OFF) condition must be provided. To achieve full isolation the fuse carrier shall incorporate the means of neutral disconnection."
	5	Delete existing sub-clause 5 and replace with: "Fuse links shall comply with the requirements of British Standard EN 60269-1, British Standard 88-2, British Standard 646/BS 2950, or British Standard 88-3. They shall be of high rupture capacity (HRC) type and be of a rating as specified in sub-clause 11 below."
	6	Delete existing sub-clause 6 and replace with: "Miniature circuit breakers shall be in accordance with British Standard EN 60898 and unless consented to by the Overseeing Organisation shall be the preferred method of circuit protection. Miniature circuit breakers shall be suitable for use on the specified operating voltage of the network at single or three phase as appropriate. Their short circuit current rating shall be no less than 10KA. The Operating Company shall ensure by enquiry of the DNO that the prospective short circuit current rating, of the supply is no greater than 16KA. Thermal or magnetic overcurrent tripping devices shall be provided with a mechanism to ensure that the contact cannot be held closed against a fault. Circuits shall be designed such that devices are operated within the ratings specified by the manufacturer."
	8	Insert additional sub-clause 8: "The cut-out gland plates shall be an integral part of the cut-out and be capable of terminating XLPE/PVC SWA cables up to 25 mm^2 and have the capacity for looping in-out. The gland plate shall typically accommodate up to 3 cables however additional armoured cable termination and cut-out capacity shall be provided at multi-headed columns, at columns where the group PECU is fitted and at locations where spur supplies are provided."
	9	Insert additional sub-clause 9: "At columns fitted with more than one luminaire, each luminaire shall be wired and fused separately, however all cut-out fuse carriers shall be arranged to be withdrawn as one. Where a PECU is fitted to any of the luminaires, the cut-out for that luminaire shall also carry the fuse for the PECU and provide simultaneous isolation of both PECU and luminaire. Each cut-out fuse carrier shall be clearly marked indicating the luminaire or device that it protects."
	10	Insert additional sub-clause 10: "The design of the cut-out shall be such that it is possible to incorporate facilities, integral within the unit, to feed additional spur(s) to sundry equipment such as lit bollards and signs. The supply to each spur shall have its own dedicated circuit protection and be individually isolated by a separate fused cut-out. Spur supplies will be protected using a dedicated

Clause No.		Alterations to be made
		fuse carrier allowing the supply to be individually isolated. Where spurs are required for supplies to third parties then reference should also be made to Cl. 1401SR.6."
	11	Insert additional sub-clause 11: "The design of the cut-out shall be such that, when the fuse carrier/neutral link is removed, no live parts are accessible, i.e. have a minimum rating of IP2X. Any protective cover exposed by the removal of the fuse link shall be designed so it cannot be separated from the main housing without the use of a key or tool."
	12	Insert additional sub-clause 12: "Circuit protection on lamp circuits shall be provided by high rupturing capacity (HRC) fused links complying with British Standard 88 category of duty 300 AC 16 rating Q1 and shall be rated to suit the lamp circuit type. Typical fuse rating for High pressure sodium and Metal Halide lamp types are 6A for 70-150 Watts, 10A for 151 to 250 Watts and 16A for 251 to 400 Watts."
1417		**Base Compartment Fixing Arrangements**
	1	Delete existing sub-clause 1 and replace with: "Electrical equipment described in clauses 1411 to 1416 installed within the base compartment of columns or posts shall be fixed in accordance with manufacturers' instructions with corrosion resistant fixing screws."
1418		**Feeder Pillars**
	1	Delete existing sub-clause 1 and replace with: "Feeder pillars, forming part of a road lighting installation, are required to: (i) house the DNO service connection facilities, (ii) provide the electrical distribution to individual circuits and their associated circuit protection, (iii) provide circuit energisation under the control of PECUs or time-clocks. Where time-clocks are used these shall be housed within the feeder pillars. PECUs shall be mounted on an immediately adjacent column or post. Lighting feeder pillars shall be used for the energising of the lighting equipment and associated electrical circuits only. All equipment fitted within the feeder pillars shall be securely fixed to the back board. The enclosure shall be adequately ventilated by a suitable method preventing the ingress of water, snow or foreign bodies. The feeder pillars shall carry a nameplate showing the manufacturer’s name or trade mark and the type designation or identification number of the product.

Clause No.		Alterations to be made
		Feeder pillars shall comply with IP 34 to British Standard EN 60529. They shall include a full size back board of varnished marine plywood at least 15 mm thick or other suitable non-hygroscopic material. Alternatively, a purpose-designed equipment mounting system may be used. The entry for cables shall be via the root."
	2	Insert the following additional sentence at end of sub-clause 2: "All MCBs, fuses, isolators, switches, contactors, bus-bars and similar parts shall be clearly identified by correctly fitted permanent labels."
	3	Delete existing sub-clause 3 and replace with: "The feeder pillar shall be fitted with a suitably rated single or 3-phase and neutral switch disconnector/isolator and the circuit fused in accordance with British Standard 7671 using fuses to British Standard 88 rated as appropriate for the consumer circuits."
	4	Delete existing sub-clause 4 and replace with: "The external pillar door locking shall be by means of tamperproof wedge type locks, with the actuator protected by plastic sealing plugs. Two sets of keys are to be provided per feeder pillar. The locks shall be fitted with triangular actuators operated by a single key. All hinges and locks shall be of stainless steel unless otherwise consented to by the Overseeing Organisation. Door locks on the wedge side should have a generous application of suitable inhibitor grease applied when installed to inhibit the effects of moisture and corrosion/rust. Access to the external enclosure shall be by means of close fitting hinged door(s) opening to a full 180 degrees at the front. Hinges shall be of stainless steel construction or similar approved materials. Means shall be provided to secure the door(s) in the open condition during maintenance visits. The door frame shall be fitted with a heavy duty non-perishable gasket to provide a minimum rating of protection against ingress of foreign materials of IP54."
	5	Delete existing sub-clause 5 and replace with: "Feeder pillar distribution boards shall be provided with an external earth, be phase barriered and correctly colour coded. They shall be fitted with the same number of live and neutral bus-bar terminals as there are outgoing circuits plus at least one spare way. The main earthing terminal in each feeder pillar shall be connected to earth in accordance with British Standard 7671 and British Standard 7430. The main earth terminal size M8 x 32 mm long shall be provided at a readily accessible location within the cabinet section of the pillar. The earth terminal shall be supplied complete with one full nut, two half nuts and two washers all manufactured in material compatible with the pillar material."

Clause No.		Alterations to be made
	6	Delete existing sub-clause 6 and replace with: "Circuit details and labelling shall be provided in each feeder pillar. The details/diagram shall be laminated or similarly protected from moisture and held in a purpose made pocket attached to the inner face of the pillar door. The electrical details must include a circuit schematic."
	7	Delete existing sub-clause 7 and replace with: "The main earthing terminal in each feeder pillar shall be connected to earth."
	8	Delete existing sub-clause 8 and replace with: "Feeder pillars shall be mounted on a 150 mm thick foundation of ST2 concrete in compliance with clause 2602. However, where special ground conditions exist the foundations shall be adjusted to accommodate such conditions. Foundations for pillars considered as 'Passively Safe' shall be constructed in accordance with all specific guidance for such pillars. Such pillars will typically have larger foundations than normally required. After completion of the cabling the feeder pillar base shall be filled to 25 mm below the door with pea gravel conforming with Table 2 of British Standard EN 12620, 4/14 aggregate with a grading category of GC90/15. Prior to the addition of pea gravel all duct ends entering the pillar shall be cut back no greater than 25mm above the finished level of the infill. Under no circumstances shall sharp gravel be used. Prior to the addition of the pea gravel the duct ends shall be completely sealed with expanded foam."
	9	Delete existing sub-clause 9 and replace with: "A durable warning sign indication 'Danger 400 Volts' or 'Danger 230 Volts' shall be fixed to the front of the feeder pillar door and the inner panel door where applicable to comply with the *Health and Safety (Safety Signs & Signals) Regulations* and the *Electricity at Work Regulations*. In compliance with these regulations these warning labels shall be triangular and no less than 75mm high."
	10	Insert additional sub-clause 10: "Where a feeder pillar is erected on a grass verge, an area of hard standing of minimum size 900x600mm shall be provided. The hard standing shall be set into the ground at a level such as to allow grass cutting to be readily undertaken."
	11	Insert additional sub-clause 11: "All ducts leaving the root of the pillar shall extend beyond the immediate concrete foundation of the pillar. A separate black duct shall be provided for the supply authority's incoming cable."
	12	Insert additional sub-clause 12: "The bonding conductor cross-sectional area for all lighting feeder pillars shall be not less than 10 mm^2 Tri-rated."

Clause No.		Alterations to be made
	13	Insert additional sub-clause 13: "The inner enclosure should contain the following equipment, (i) A single phase double pole / 3 phase & neutral isolator to British Standard 5419, (ii) A single phase single pole/3-phase contactor rated at British Standard 5424, (iii) A push button operated test switch accessible from within the outer enclosure and providing a timed over-ride of the photocell, (iv) A DIN rail fitted with British Standard EN 60898 miniature circuit breakers/ Modular fuse holders fitted with fuses to British Standard 88-2.1. The control circuit fuse shall normally be rated at 6 Amp with any spare output circuit fuses rated at 20 Amp, unless agreed with the Overseeing Organisation, and (v) A neutral rail and an earth rail to accept the installed wiring with at least one spare termination provided on each rail. Note: within the inner enclosure all electrical apparatus shall be shrouded to a minimum of IP2X including the neutral rail and all neutral connections/terminals."
1419		**Wiring**
	1	Delete existing sub-clause 1 and replace with: "All wiring and installation of components within the column, post, lit sign unit, bollard or pillar shall be as described in this Contract."
	2	Delete existing sub-clause 2 and replace with: "The wiring between the luminaire and the components in the base of the column or sign unit shall be PVC insulated 'arctic grade', 3-core 2.5 mm^2 flexible cable with blue sheath. This cable shall generally be to British Standard 6500 and be suitable for use over the temperature range –20 to +70 deg. C. The circuit protective conductor within this cable shall connect the earth terminal on the luminaire to the main earth terminal associated with the column cut-out in the base compartment. Under no circumstances shall domestic grade flat 'Twin and earth' cable be used for any purpose within lighting installations."
	5	Delete existing sub-clause 5 and replace with: "All wiring/cables shall be correctly colour coded throughout their length and labelled appropriately at all points of termination. The Operating Company shall comply with British Standard 7671:2008 with regard to harmonized wiring colours and the warning notices required should 'old' and ’harmonized’ wiring colours form part of a single installation."
	6	Insert the following additional sentence at the end of sub-clause 6: "Correctly selected and fitted plastic glands shall protect and seal all cable penetrations."

Clause No.		Alterations to be made
	7	Delete existing sub-clause 7 and replace with: "Under no circumstances shall wiring, cables and cable tails come into direct contact with the inner surfaces of access doors or be located adjacent to hinges, sharp metal edges, fixing screws or similar items. Installers shall, at all times ensure that conductor insulation is protected from being penetrated, cut, abraded, or crushed or in any other way physically damaged as a result of contact with such items."
	8	Delete existing sub-clause 8 and replace with: "Wiring shall, wherever possible, be housed inside columns, wall brackets and posts or stiffening members. Where it is external it shall be secured using appropriate methods and in accordance with British Standard 7671. Connections between conduit and sign housings, switchboxes and other components shall be sealed to no less than IP66. Internal surfaces in contact with such cables shall be smooth. Only plastic conduit, rigid or flexible, shall be used."
	9	Delete existing sub-clause 9 and replace with: "All unused cores shall be cut to a suitable length for safe, unobtrusive stowage and the ends sealed and insulated."
1420		**Earthing**
	1	Delete existing sub-clause 1 and replace with: "Circuit protective and equipotential bonding conductors shall be installed in accordance with British Standard 7671 and British Standard 7430 and shall be green/yellow PVC or XLPE insulated or sleeved. Where bolted connections are required, these shall be terminated in accordance with manufacturers' instructions in correctly sized purpose made lugs. Such connections shall be made using brass or stainless steel or other compatible non-ferrous nuts, bolts and washers."
	3	Delete existing sub-clause 3 and replace with: "A separate circuit bonding conductor not less than 10 mm^2 cross-sectional area shall connect the earth terminal of the luminaire to the adjacent earth stud of the column/bracket."
	4	Delete existing sub-clause 4 and replace with: "All extraneous conductive parts, as described in British Standard 7671, and including doors to feeder pillars, lighting columns and lit sign units, shall be bonded to the main earth terminal using an equipotential bonding conductor of 10 mm^2 cross-sectional area. When the earth conductor forms part of a 3-core cable the equipotential bonding conductor can be reduced to a size equal to the other cores but not less than 2.5 mm^2 cross-sectional area. Earthing of lighting equipment in general and the design and installation of earth electrodes in particular shall all be in accordance with British Standard 7674 and British Standard 7430."
	6	Insert the following additional sub-clause 6: "Where lighting pillars, columns, signs are adjacent to the same or separately supplied electrical equipment i.e. equipment fed from different

Clause No.		Alterations to be made
		electrical supply pillar and these are located within 3 metres of each other, then they shall be bonded together in accordance with British Standard 7671 Reg. 411.3.1. However in accordance with British Standard 7671 Reg. 559.10.3.1(v) bonding is not required to adjacent metallic structures such as safety fences, handrails and similar except that where lightning protection is to be provided the bonding shall satisfy British Standard EN 62305. No lighting infrastructure equipment shall be located within 5 metres of metallic conductive parts forming part of a separately supplied electrical equipment, such as Traffic Scotland Equipment and similar equipment. Bonding between the metal parts of such equipment is specifically excluded by this note in accordance with British Standard 7671 Reg. 542.1.3-8. Where an electrical supply is required to permanently power third party equipment located at the same Site then this shall be accommodated through the provision of a separate feeder pillar housing, with its own electricity suppliers cut-out. If this second housing is located within 3 metres of a road lighting pillar then the two pillars shall be bonded together in accordance with British Standard 7671 Reg. 411.3.1."
	7	Insert the following additional sub-clause 7: "The main earthing conductor within the feeder pillar shall be of copper and be of a size no less than the supplier's phase conductor. Where the supplier's phase conductor is greater than 16 mm^2 the main earth conductor is 16 mm^2 The main earth conductor shall connect the main earthing terminal to the incoming supply earth. Under no circumstances shall fortuitous contact via mechanical fixings be relied upon as a conductive path in place of a specific, correctly selected, rated, terminated and installed earthing conductor. Crimp connections for earth conductors shall meet the performance criteria suggested in British Standard 7609 using a matching tool, die set and connector, i.e. the first and second barrels shall crimp the conductor, the third set shall crimp the insulating, and facilitating stress relief and allowing for increased movement of the conductor. All bolted earth connection shall be made between two plain washers manufactured using material compatible with the equipment metalwork."

Clause No.		Alterations to be made
	8	Insert the following additional sub-clause 8: "Earth electrodes shall be fitted to all lighting electrical installations both adjacent to the electricity supply pillar and at the end of each circuit. The acceptable resistance to earth of these electrodes shall be selected in accordance with the requirements of British Standard 7671 and British Standard 7430. Unless lightning protection is required typical values are likely to be no greater than 20 ohm for each individual electrode used as part of a TN-S circuit. For circuits energised by TN-C-S type electricity supply the typical electrode resistance to earth shall be as specified in Table 9.3 of British Standard 7671 Guidance Note 5 where the circuit wattage sets the maximum resistance allowed. Lightning protection typically requires electrode resistances below 10 ohms. For the avoidance of doubt the electrode resistance values referred to above are provided for guidance only and must be confirmed by the designer before use."
	9	Insert following additional sub-clause 9: "Where there are exposed metal casings of capacitors/ignitors these shall be directly connected to earth. Reliance on the earthing of security clips shall not be acceptable. All bonding conductors shall terminate at a common point."
1421		**Underground and Ducted Cable**
	1	In sub-clause 1 insert "purple" prior to "XLPE" in first sentence.
	2	In sub-clause 2 insert "purple" following "self coloured" in first sentence.
	3	Delete existing sub-clause 3 and replace with: "Cable covers for protection of underground cables shall comply with British Standard 2484 and shall be installed as described in Appendix 14/4. When cable covers are installed, marker tapes are not required."
	4	Delete existing sub-clause 4 and replace with: "Cable trenches shall be excavated to the lines described and in accordance with clause 602. The depth of excavation shall be such that cables laid under verges, footways or open ground shall have a minimum cover of 500 mm and under carriageways of 750 mm or 300 mm below formation whichever is the greater depth."
	5	Delete existing sub-clause 5 and replace with: "Cables shall be laid without sharp bends and kinks. If required, additional protection and support shall be provided as required."
	8	Delete existing sub-clause 8 and replace with: "Electrical supply cables shall not be installed within 500 mm of signal, communication or telecommunication cables or within 300 mm of HV cables."
	9	In sub-clause 9 insert "on a rising thermometer" following "0°C" in first sentence.
	11	Delete existing sub-clause 11 and replace with:

Clause No.		Alterations to be made
		"Sufficient length of cable shall be allowed for its termination. When termination does not proceed immediately following the installation of the cable, its end shall be sealed against the ingress of moisture. If such cable ends are buried, their positions shall be marked with a permanent marker block consisting of a 300 mm square x 225 mm deep precast concrete block having a mark indented into its top surface and recorded on the Site Records."
	14	Delete existing sub-clause 14 and replace with: "Metallic trace marker tape shall be laid above the duct or cable to permit cable detection by electronic route tracing equipment, this shall be purple self-coloured PVC or polythene plastic tape for cable marking and shall be laid approximately 250 mm above any electrical supply/distribution cable. The tape shall be not less than 0.1 mm thick and 150 mm wide with the wording "Street Lighting Cables Below" printed in black along the full length so as to occupy not less than 75% of its available length and occurring at least at 1 m intervals. Where several cables are laid in one trench, only one line of marker tape need be installed."
	20	Insert the following additional sub-clause 20: "Cable laid in troughs shall not be used."
	21	Insert the following additional sub-clause 21: "Only steel wire armour cabling shall be used underground for lighting supply distribution. All cabling shall be purple in colour and installed within continuous purple self-coloured ducts in accordance with Cl. 1421.15. Straight or split-concentric cable shall not be used as part of any lighting installation. Direct buried cables shall not be installed."
	22	Insert the following additional sub-clause 22: "Under no circumstances shall cables enter a column, post, bollard or pillar base without the protection of ducting typically 60mm diameter. Such ducts, shall continue into the base and terminate at a suitable height to allow a seal to be formed using expanded foam sealant or similar."
	23	Insert the following additional sub-clause 23: "When laid in carriageways, road lighting service ducts shall be twin walled high density polypropylene with smooth bore of 150mm in internal diameter to British Standard EN 50086-2-4, purple in colour and printed with "STREET LIGHTING" lettering at intervals of not more than one metre throughout its length. A minimum cover of 450mm shall be provided."
	24	Insert the following additional sub-clause 24: "Cable duct laid under carriageways shall consist of 2 No. 150mm ducts and having a minimum cover of 750mm and shall be protected by concrete surround of mix ST2 concrete or similar as directed by the Overseeing Organisation. The ducts shall be twin walled high density polypropylene with smooth bore of 150mm in internal diameter to British Standard EN 50086-2-4, purple in colour and printed with "STREET LIGHTING" lettering at intervals of not more than one metre throughout its length and shall

Clause No.		Alterations to be made
		terminate in an underground draw-in chamber at each side of the carriageway."
	25	Insert the following additional sub-clause 25: "When laid in verges and footways, road lighting service ducts shall be twin walled high density polypropylene with smooth bore of 100mm in internal diameter to British Standard EN 50086-2-4, purple in colour and printed with "STREET LIGHTING" lettering at intervals of not more than one metre throughout its length. A minimum cover of 650mm shall be provided."
	26	Insert the following additional sub-clause 26: "Ducts shall be impervious to water, capable of being laid in temperatures down to -10 degrees C and be sufficiently flexible to follow undulation in a trench bottom."
	27	Insert the following additional sub-clause 27: "At least 75mm clearance shall be provided between the cable duct and the sides of the trench and between ducts sharing the same trench."
	28	Insert the following additional sub-clause 28: "At least 150mm clearance shall be provided between cable ducts and services pipes belonging to other Undertakers."
	29	Insert the following additional sub-clause 29: "At least 500 mm shall be provided between lighting electrical cable ducts and communications cable ducts."
1422		**Cable Joints**
	1	Delete existing sub-clause 1 and replace with: "Cable joints, other than for short term remedial work, shall not be permitted for underground cables supplying road lighting. Lighting installations shall be designed to employ a loop in - out arrangement without joints. When joints are installed these shall be made using jointing kits complying with British Standard 6910-1 which shall be installed in compliance with British Standard 6910-2. The Operating Company shall repair damaged cables by replacing the full length of the damaged cable."
	2	Delete existing sub-clause 2 and replace with: "Consent is required from the Overseeing Organisation for any remedial jointing during new work. A record shall be kept to enable cable joints to be identified with the jointer responsible for the work."
	3	Delete existing sub-clause 3 and replace with: "Cable joints shall be made where described. Additional joints shall not be provided on cables in duct or trough. Consent is required from the Overseeing Organisation for additional joints using other fixing methods."

Clause No.		Alterations to be made
1423		**Armoured Cable Terminations**
	1	Delete existing sub-clause 1 and replace with: "Cables shall be individually terminated and existing cables re-terminated, and secured at switches, cut-outs and other electrical apparatus by means of a compression type gland and, where not provided as part of the apparatus, a gland plate compatible with the equipment material and complying with ' British Standard 6121-1, British Standard EN 50262'. Cable glands shall be manufactured in brass to British Standard 2874."
	2	Delete existing sub-clause 2 and replace with: "Earth connection to the cable armouring shall be made to the gland plate. At least one non ferrous earthing terminal compatible with the equipment shall be provided on the gland plate."
	3	Delete existing sub-clause 3.
1424		**Inspection and Testing to be Carried Out by the Contractor**
	2	Delete existing sub-clause 2 and replace with: "Not less than 3 months prior to commencing testing the Operating Company shall submit an Inspection and Testing Method Statement, Risk assessments, and the Extent and Limitations statement, forming part of the British Standard 7671 Electrical Installation Certificate, initial verification to the Overseeing Organisation for consent. The Extent and Limitations shall include:

Clause No.		Alterations to be made
		(i) a description of the electrical aspects of the lighting units including the Class of the luminaires to be used i.e. Class I or Class II together a statement of the testing regime to be adopted for these items, (ii) the extent of the network fixed wiring covered by BS 7671 including the point of termination within the lighting units and the point of supply (origin) for the installation, and (iii) any specific issues relating to the inspection and testing of the particular electrical installation. The Inspection and Testing Method Statement shall detail all tests and items of inspection to be undertaken, the sequence of tests, how each test will be undertaken and what Records will be recorded and what values for each test will prove compliance with British Standard 7671. The Method Statement shall include the Lighting Installation design drawings and schematics. The schematic shall be suitable for inclusion within the pillars and cabinets forming part of the circuit described. Such included schematics shall be laminated or otherwise protected against damage by moisture or handling during use. The Operating Company shall ensure that all required aspects of the electrical installation are sufficiently and correctly inspected and tested as required by British Standard 7671 Part 6 and as further described in *IEE Guidance Note 3 'Inspection and Testing'*. Without reduction to the importance of any other aspect of British Standard 7671 Inspection and Testing the attention of persons undertaking this work is particularly drawn to the following: (i) A cable over-sheath insulation test shall be carried out prior to any other testing of the network cables, (ii) Continuity testing of protective conductors within the network circuits, including main and supplementary equipotential bonding conductors, shall be carried out and the values of R1+R2 with respect to the circuit origin recorded. These measurements shall be carried out in a way that excludes any 'parallel paths', (iii) The resistance of all earth electrodes shall be measured and recorded, (iv) For Periodic Testing Class I luminaires a 500V insulation test shall be carried out between the phase and neutral cores connected together relative to the earth core and metalwork of the lighting unit. The initial commissioning testing being carried out on each individual core. Insulation resistance shall not be less than 1 Mohm in either case, (v) For Periodic Testing Class II luminaires a 500V insulation test shall be carried out between the phase and neutral cores connected together relative to the metalwork of the lighting unit. The initial commissioning testing being carried out on each individual core. Insulation resistance shall not be less than 2 Mohm in either case, (vi) For the periodic testing of network cables a 500V insulation test shall be carried out, with the phase and neutral cores connected together, relative to the earth core and the metalwork of the lighting column.

Clause No.		Alterations to be made
		The initial commissioning and testing being carried out on each individual core. Insulation shall not be less than 6 Mohm regardless of cable length. This test shall be carried out with cables in place and connected to the supply side of the lighting units cut-outs. During the testing all luminaires shall be isolated on the consumer side of the cut-out, (vii) The Operating Company shall record the earth fault loop impedance at the suppliers cut-out at every lighting unit with all earth conductors and earth electrodes in place in accordance with Guidance Note 3 para. 2.7.14. Values of Zs measured for any circuit shall not exceed those given in British Standard 7671 Tables 41.2 and 41.3 for 0.4 second disconnection, and (viii) The Operating Company shall ensure that inspection and testing undertaken shall be sufficient to fulfil the requirements of the Electricity at Work Regulations 1989, Regulation 4(1) and other relevant Legislation. On conclusion of the Inspection and Testing, submission of the results to the Overseeing Organisation shall take place within 7 days of the completion of each circuit inspection and testing. If, in the opinion of the Overseeing Organisation, the Inspection and Testing is not considered adequate or the installation is not considered correct then all such necessary remedial work and repeated inspection and testing shall be undertaken by the Operating Company and all corrected results submitted to the Overseeing Organisation."
	4	Delete existing sub-clause 4 and replace with: "The Operating Company shall ensure that a voltage reading is taken at each feeder pillar and at the terminals of the last current-using equipment on each circuit, with all equipment energised. Where a spur is created from the main circuit to energise a bollard, sign or similar the voltage at all such spurs shall also be recorded. The voltage measured at the last current consuming piece of equipment on a given circuit shall not be below 223.1V (3% of 230V, British Standard 7671:2008) at full load."
	5	Delete existing sub-clause 5 and replace with: "The Operating Company shall provide and maintain an installation, inspection and testing programme. The programme shall be provided to the Overseeing Organisation at least 14 days prior to any installation work being undertaken and shall be updated and provided to the Overseeing Organisation when the programme changes from that previously provided to the Overseeing Organisation. The programme shall detail duct laying, cable pulling, column erection, inspection and testing. The programme will include dates when Records will be provided."

Clause No.		Alterations to be made
	6	Delete existing sub-clause 6 and replace with: "The Operating Company shall furnish the Overseeing Organisation with two copies of a Certificate verifying compliance with British Standard 7671 upon satisfactory completion of the inspection and tests. The layout of the British Standard 7671 Certificate shall conform to the sample Certificates as provided in the *LDS8005 – Electrical Inspection and Testing of Lighting and Associated Electrical Assets and Installations with Model Forms*. The separate Certificate covering the testing of the luminaires and similar items considered outside of the scope of British Standard 7671 shall also be submitted."
	8	Insert the following additional sub-clause 8: "The value of Ze provided by the electricity supplier at the electrical origin shall be no greater than 0.35 ohm for TN-C-S supplies and 0.8 ohm for TN-S supplies. The Overseeing Organisation shall not accept values that exceed these Ze maximum values. The Operating Company shall ensure the Ze values are achieved by the DNO prior to acceptance of the supply on behalf of the Overseeing Organisation."
1714		**Structural Concrete**
	1	Add the following additional paragraph to sub-clause 1: "Concrete spacers or distance tubes shall conform to British Standard 7973 and be manufactured in accordance with British Standard EN ISO 9001:2008. Plastic spacers shall not be used."
2007		Delete **Integrity Testing of Concrete Bridge Deck Waterproofing** and replace with **Integrity Testing of Bridge Deck Waterproofing**
	1	At end of sub-clause 1 add the following: The Operating Company shall provide with all batches of material delivered to the Site a Certificate of Compliance with the Specification and Annex A and in particular confirming that the material complies with the BBA Roads and Bridges Agreement Certificate. The Operating Company shall provide 2 No free film samples, sprayed on to open moulds (at least 200 millimetres x 200 millimetres in area and minimum thickness two millimetres), for tensile strength, elongation at break to British Standard ISO 37:2011and tear strength to British Standard ISO 34 Part 1:2012 Method C. The Operating Company shall supply copies of the test results with the samples. A membrane can be applied to the surface of concrete slabs between 14 to 17 days after casting provided no water was added to the surface of the concrete during cure. The Operating Company shall continuously monitor the coverage rate of the material applied to the deck and shall provide sheets on a daily basis showing the start / finish weights and area covered for each period of spray operation.

Clause No.		Alterations to be made
		The Operating Company shall continuously monitor the wet film thickness using a gauge pin or a standard comb type thickness gauge. The Operating Company shall provide sheets on a daily basis indicating the wet film thickness measured and location. The Operating Company shall measure the adhesion of the fully cured membrane to the deck using Elcometer Adhesion Tester Model 106 or similar. The Operating Company shall provide test values and location of test before these areas are covered. Minimum adhesion values shall be as follows: <u>for Primer</u>: 2.0 N/mm² on steel 1.0 N/m² on concrete Suggested rates of testing: 1 adhesion test (dolly) per 20m² of deck plate or the nearest equivalent depending on panel areas. <u>for Waterproofing:</u> 2.0 N/mm² on steel 1.0 N/mm² on concrete Three tests shall be required per 500 square metres of sprayed membrane. The Operating Company shall reinstate the test areas including primer if necessary. Test values below the minimum values specified above shall require spraying operations to be suspended while further investigation is undertaken. The Operating Company shall at its own expense remove and re-spray areas that do not meet the required figures.
		The finished waterproof membrane surface shall be 'Holiday Tested' or tested by an equivalent method consented to in writing by the Overseeing Organisation and any imperfections detected shall be rectified by the Operating Company at its own expense. The Operating Company shall make allowance in his programme of Works for such testing. **High Voltage Pinhole / Holiday Detection for Bridge Deck Membranes Equipment** Pinhole detection shall be carried out using suitable equipment and the results made available to the Overseeing Organisation. The equipment shall have the following facilities: a. variable DC test voltage (1 - 20 kilovolts DC), b. audible and visual alarm signals, c. sensitivity adjustment, d. phosphor bronze or silicon rubber electrode, e. earth lead connection with clip, and f. test voltage. The output voltage of the pinhole detector shall be adjusted in accordance with the following table. **COATING THICKNESS** **TEST VOLTAGE** 2 millimetres to 2.5 millimetres 12.5 kilovolts

Clause No.		Alterations to be made
		2.5 millimetres to 3 millimetres 13.5 kilovolts The coating thickness is the maximum expected not the average. **Procedure** (a) Identify a site on the bridge deck to which the earth lead connection from the pinhole detector can be fixed, i.e. a metal object imbedded in the bridge deck, (b) Connect the leads from the pinhole detector in accordance with the manufacturer's written instructions, (c) Fix the earth lead from the pinhole detector to the substrate and ensure that a good electrical contact is made, (d) Adjust the pinhole detector to the required test voltage in accordance with Sub-Clause (a) above, (e) With the pinhole detector turned OFF, connect any extension rods that may be required to the test probe handle. Connect the electrode to the end of the extension rods if fitted. A damaged electrode that does not make 100 per cent contact along its length shall not be used, (f) Pass the electrode over the coated surface at a maximum rate of 100 millimetres / second, paying particular attention to edges, holes and visible irregularities in the coating. The test voltage will have to be reduced if testing edges as the coating will be thin, (g) To check the pinhole detector is working correctly, touch the electrode onto the exposed substrate. The pinhole detectors alarm signal should be activated. If not, check the lead connections to the equipment and the earth lead to the substrate, also it may be necessary to adjust the sensitivity control on the equipment, (h) When a fault has been identified by the detector, the electrode shall be moved sideways in order to identify its precise location. Subsequently the fault should be ringed with a suitable marker. Such markings shall be made sufficiently distant from the coating Defect to allow the repair procedure to be carried out without detriment to the adhesion of the repair material, and (i) Continue testing and marking defects until all the coating has been tested, changing the electrode size as necessary. All repaired areas shall be re-tested.

<table>
<tr><th>Clause No.</th><th></th><th>Alterations to be made</th></tr>
<tr><td></td><td></td><td>Brickwork, Blockwork And Stonework</td></tr>
<tr><td>2404</td><td></td><td>Mortar</td></tr>
<tr><td></td><td>3</td><td>In sub-clause 3, add cement designation (iv) to Table 24/1 as follows:
<table>
<tr><th>Mortar Designation</th><th>Cement: Lime: Stone dust</th><th>Masonry Cement: Stone dust</th></tr>
<tr><td>(iv)</td><td>1:1:5 to 6</td><td>1:4½</td></tr>
</table></td></tr>
<tr><td></td><td>7</td><td>Insert the following additional sub-clause 7:

"Where joints less than 2 mm wide in natural stone ashlar stonework shall be required a cement mortar designation (iv) containing natural stone dust of the same colour as the adjacent masonry shall be used. However, for sandstones and similar weaker masonry, a suitable lime mortar mix shall be selected based on clause 2476AR and Appendix 24/1."</td></tr>
<tr><td>2412</td><td></td><td>Brickwork and Blockwork</td></tr>
<tr><td></td><td>5</td><td>Delete existing sub-clause 5 and replace with:

"Not used."</td></tr>
<tr><td>2417</td><td></td><td>Unreinforced Masonry Arch Bridges</td></tr>
<tr><td></td><td></td><td>In sub-clause 8 delete the Table and replace with the following table:
<table>
<tr><th colspan="2" rowspan="2">Location / Element</th><th colspan="4">Masonry Unit Type</th></tr>
<tr><th>Class A Eng Brickwork</th><th>Class B Eng Brickwork</th><th>Common Brickwork/ blockwork/ stonework with joints more than 2mm wide</th><th>Natural stone ashlar stonework with joints less than 2mm wide</th></tr>
<tr><td colspan="2">Below a level of 150mm above finished ground level</td><td>(i)</td><td>(ii)</td><td>(ii)</td><td>(iv)</td></tr>
<tr><td rowspan="2">Above a level of 150mm above finished ground level</td><td>Abutments, spandrel/ wing walls, piers and parapets</td><td>(i)</td><td>(ii)</td><td>(iii)</td><td>(iv)</td></tr>
<tr><td>Arch rings</td><td>(ii)</td><td>(ii) or (iii)</td><td>(iii)</td><td>(iv)</td></tr>
</table></td></tr>
<tr><td>3006</td><td></td><td>Planting</td></tr>
<tr><td></td><td>14</td><td>Insert the following additional sentence at end of sub-clause 14:

"Compost produced to PAS 100:2005 may be used."</td></tr>
</table>

Clause No.		Alterations to be made
3007		**Grass, Bulbs and Wildflower Maintenance**
	1	For the purposes of this Clause, Appendix 30/7 of Schedule 9 Part 2 and paragraph 4.15 of Schedule 7 Part 1, grass shall mean the sward including any type of vegetative growth therein. Delete existing sub-clause 1 and replace with: "The grass and wildflower areas to be maintained are scheduled in Appendix 30/7. Prior to any cutting operation all stones or other harmful material from whatever source which may damage grass cutting plant or create a possible hazard to persons or property shall be removed off Site. Not more than 48 hours prior to grass cutting the area to be cut shall be cleansed of litter to Grade B standard as stated in the Code of Practice on Litter and Refuse and any litter susceptible to shredding shall be removed. Any movable obstructions such as seats and litterbins shall be removed to facilitate cutting and replaced prior to leaving the Site. The use of weed killer or other chemical substances shall not be used in order to restrict the growth of grass. Where the areas contain injurious weeds as listed in sub-Clause 3002.1, the first cut of any year shall be undertaken prior to the weeds flowering and additional selective cuts shall be undertaken within these areas as required in Appendix 30/7 or instructed by the Overseeing Organisation. No grass cutting shall be carried out within 250 mm of unprotected trees and shrubs. Strimmers shall not be used for cutting grass within unprotected planted areas without the written consent of the Overseeing Organisation."
	2	Delete existing sub-clause 2 and replace with: "Tractors mounted with grass cutting equipment shall comply with manufacturer's recommendations regarding the fitting and operation of attachments. Grass cutting equipment fitted to tractors shall comply with manufacturer's recommendations regarding the fitting and operation of such attachments. All dedicated grass-cutting machines shall have an effective silencer of the type originally fitted on manufacture. All grass cutting equipment, whether self-propelled or attached to a tractor, shall comply with the following: (i) All cutters and blades shall be sharpened and set according to the manufacturer's recommendations to ensure a consistent cleanly mown sward and the height of cut determined as the height above ground level to the cutting blade measured with the machine standing on a hard level surface, (ii) All guards shall be in place and in good condition and all safety devices shall be operational and of a type originally fitted on manufacture, and (iii) For grass and vegetation cutting on slopes, the grass-cutting equipment manufacturer's recommendations relating to safe gradients for cutting shall be observed.

Clause No.		Alterations to be made
		All vehicles involved in verge and visibility area cutting shall comply with the requirements of clause 117."
	3	Delete existing sub-clause 3 and replace with: "Grass shall be cut cleanly and evenly to achieve the outcomes specified in this clause, without damage to the existing surface. Soft vegetative growth such as clover and other broad-leaved vegetation shall be deemed to be part of the cutting operation where it falls within areas of grass."
	5	Delete existing sub-clause 5 and replace with: "The grass cutting operation shall include cutting around all obstacles such as trees, posts and signs. Strimmers may be used where appropriate. Areas around obstacles shall be cut to the same height as specified for the surrounding grassed areas. Strimming shall be carried out within two days of grass cutting of surrounding areas, such that cut grass and strimmed grass shall have a similar appearance."
	6	Delete existing sub-clause 6 and replace with: "Mowing operations shall avoid spillage of debris such as stones onto carriageways or footways. Grass clippings and arisings shall be dispersed evenly over the sward except as set out below under which circumstances they shall be removed from Site: (i) for the first cut of the year in areas of high amenity, amenity or general grass, (ii) for grassed central reservations, (iii) when cutting is carried out in high winds, or when high winds are forecast, which could lead to arisings being blown around, (iv) clippings and arisings lying on roads, footpaths, car parks and other hard surfaces, (v) arisings that could lead to the blockage of ditches or drains, and (vi) where clippings or arising are sufficiently thick as to be detrimental to the underlying sward."
	7	Delete existing sub-clause 7 and replace with: "During periods when ground conditions are so wet as to prevent grass cutting without causing damage to the surface or producing divots, Operations shall cease and shall recommence only when ground and weather conditions are suitable. The Operating Company shall record and report all such conditions."
	9	Delete existing sub-clause 9 and replace with: **"Grass Cutting – High Frequency** In the locations stated in Appendix 30/7, for high amenity grass, grass shall be cut to maintain a height of between 25mm and 75mm."

Clause No.		Alterations to be made
	10	Delete existing sub-clause 10 and replace with: **"Grass Cutting: Medium Frequency** In the locations stated in Appendix 30/7, for amenity grass, grass shall be cut to maintain a height of between 50mm and 150mm **Grass Cutting: Low Frequency** In the locations stated in Appendix 30/7, for general grass, grass shall be cut as follows: (i) Grass shall be cut to maintain a height of between 80mm and 300mm, and (ii) Grass shall be cut to prevent an obstruction of a sight line or the visibility of a sign or other item. **Grass Cutting: Minimal Frequency** In the locations stated in Appendix 30/7, for rough grass, grass shall be subject to minimal frequency cutting as follows: (i) to remove a hazard, (ii) to promote biodiversity, and (iii) as a minimum cut in alternate years.**"**
	11	Delete existing sub-clause 11 and replace with: "Not used."
	12	Delete existing sub-clause 12 and replace with: "Not used."
	13	Delete existing sub-clause 13 and replace with: "**Maintenance of Edges** The edges of planted areas adjoining kerbs, hard surfaces and structures shall be cut in order to maintain the original shape of the grass area. Herbicide treatment in lieu of edging will not be permitted."
	14	Delete existing sub-clause 14 and replace with: "The edges of planted areas adjoining kerbs, hard surfaces and structures shall be re-formed as necessary in order to maintain the original shape and dimension of the grass area. Where edges abut planted areas, re-forming shall include drawing back the soil from the edges so that edging shears can be used."
	15	Delete existing sub-clause 15 and replace with: "Where edges abut hard surfaces, re-forming shall include the removal of any soil or vegetation growing on or through the hard surface."
	17	Delete existing sub-clause 17 and replace with: "Not used."

Clause No.		Alterations to be made
	18	Delete existing sub-clause 18 and replace with: "In the locations in the landscape inventory not covered by any of the high, medium or low frequency regimes, a single cut shall be undertaken once in the second Annual Period and subsequently every two years. The cut shall be to a height not exceeding 150 mm and the cuttings evenly dispersed to leave a neat and uniform appearance."
	19	Delete existing sub-clause 19 and replace with: "Not used."
	20	Delete existing sub-clause 20 and replace with: "Where there is a possibility of the sign being obscured by grass, visibility splays in front of road signs shall be cut in accordance with requirements for Grass Cutting – Minimal Frequency for general grassed areas. The cut shall extend from the edge of the carriageway, at a point 50 m from the sign and be splayed to meet the full width of the sign. This will only be required where there is a low level sign or on a slope."
	25	Delete existing sub-clause 25 and replace with: "Where it is stated in the landscape inventory that grass and herbaceous plants shall be cut in planted areas/plantations, the Operating Company shall cut between the woody plants over the whole area up to the boundaries of the planted area/plantation, whilst avoiding damage to the trees and shrubs, leaving no areas uncut and producing an even sward height across the whole area."
	26	Delete existing sub-clause 26 and replace with: "Where cutting of wildflowers or areas of other floral interest in rough grass is required, one or more of the following operations, shall be carried out, as identified in the landscape inventory: (i) Annual Spring/Summer Cut Areas shall be cut to a height of between 50 and 60 mm after the seeding of desirable species, in late spring/early summer. Arisings shall be raked off and removed off Site, avoiding any pulling, tearing or causing other damage to the soil surface and retained vegetation, (ii) Annual Summer/Autumn Cut Areas shall be cut to a height of between 50 and 60 mm after the seeding of desirable species, in late summer/early autumn. Arisings shall be raked off and removed off Site, by such means that avoids pulling, tearing or causing other damage to the soil surface and retained vegetation, (iii) Topping Cut Areas shall be cut to a height of between 80 and 100 mm after the seeding of desirable species, in late autumn, with the cuttings being finely chopped and evenly dispersed over the area, and (iv) Biennial Cut Areas shall be cut to a height of between 50 and 60 mm, after the seeding of desirable species, every alternate year. Arisings shall be raked off and removed off Site.

Clause No.		Alterations to be made
		If no specific requirements are identified in the landscape inventory then wildflower areas and areas of other floral interest in rough grass shall receive a topping cut in accordance with paragraph (iii) above. The Operating Company shall seek the Overseeing Organisation's consent to alter the requirement to a Biennial Cut in accordance with sub-clause 3007.26 paragraph (iv) if it believes it would be in the best nature conservation interest."
	27	Delete existing sub-clause 27 and replace with: "Within the wildflower areas or areas of other floral interest stated in the landscape inventory, the cutting shall include areas of bramble, tree and shrub saplings of less than 20 mm diameter. Cutting shall be timed to allow for prior seeding of desirable species."
	29	Delete existing sub-clause 29 and replace with: "Where directed and subject to an Order, weed control in wildflower areas shall be carried out using spot treatment with a translocated herbicide applied in accordance with sub-clause 3002.7, at the appropriate frequency."
	31	Delete existing sub-clause 31 and replace with: "In high amenity, amenity and general grass areas, molehills shall be removed before grass-cutting and the soil distributed on nearby cultivated areas."
	32	Delete existing sub-clause 32 and replace with: "Bulb foliage within ornamental planting areas shall be cut down when leaves have died back naturally, not earlier than six weeks after flowering and normally early June for Narcissus species. Bluebell stands shall not be cut. Arisings shall be raked up and removed off Site."
3009		**Establishment Maintenance for Planting**
	4	Delete existing sub-clause 4 and replace with: "Stakes, tubes, guards and ties shall be removed from plants where they are no longer required and either disposed of off Site or reused if suitable."
3010		**Maintenance of Established Trees and Shrubs**
	1	Delete existing sub-clause 1 and replace with: "All areas of established planting/vegetation to be maintained each year until the Service End Date shall be as shown within the landscape inventory. Established tree and shrub planting shall be maintained in the locations and over the times stated below.

Clause No.		Alterations to be made
	1.1	Hedges which are distinct linear planting strips within the road corridor are intended to be formally shaped and maintained. Maintenance requirements and frequency are: (a) Trimming/pruning: Once per year – arisings shall be removed, (b) Laying: When subject to an Order, (c) Gapping up: When subject to an Order, (d) Checking/topping-up mulch: Once per year if required, and (e) Weeding: Hedges under 5 years old shall be kept weed free.

Clause No.		Alterations to be made
	1.2	Shrubs which are sub divided into: (i) Ornamental shrubs – planted as a visual element of the road corridor – usually associated with settlements and urban roundabouts, and (ii) Informal shrubs – generally native major and minor shrub species (excluding gorse and broom) informally planted or developing along the road corridor up to a maximum height of approximately 3.5m. The level and frequency of maintenance for shrubs is adjusted according to the level of maintenance required (high, medium and low). The category of maintenance and frequency relates to the category of the adjacent grass cutting i.e. high maintenance shrub treatment is undertaken in areas of high amenity/high frequency grass cutting, medium maintenance shrub treatment is undertaken in areas of amenity grass/medium frequency grass cutting and low maintenance shrub treatment is undertaken in areas of general grass/low frequency grass cutting, as follows: (i) High Maintenance: (a) Weeding: Monthly during growing season, (b) Pruning/cutting back/ removal/ disposal of arisings: Once per year, (c) Checking/topping-up mulch: Once per year if required, and (d) Gapping-up: When subject to an Order. (ii) Medium Maintenance: (a) Weeding: Three times during growing season, (b) Pruning/cutting back/ removal/disposal of arisings. Once per year, (c) Checking/topping up mulch. Once per year if required, and (d) Gapping up. When subject to an Order. (iii) Low Maintenance: (a) Weeding. Twice during growing season, (b) Pruning/cutting back/removal/disposal of arisings. Once every two years, and (c) Cutting back. When subject to an Order.
	1.3	Woodland which is sub divided into: (i) New woodland, under 5 years old, a newly planted or self-seeded area of predominantly tree species with the potential of developing into a mature wooded area. Any new planting undertaken through

Clause No.		Alterations to be made
		this Contract will be subject to establishment maintenance for three years in accordance with sub-clause 3002.7, (ii) Establishing Woodland, between 5 and 10 years old, a developing area of tree species with or without woodland shrubs and with the potential of developing into a mature wooded area, and (iii) Maturing Woodland, over 10 years old, an established area of dense tree cover, whether single or mixed species/ varieties and with or without a woodland shrub layer. Maintenance requirements and frequency are as follows: (i) New Woodland: (a) Weeding. Twice during growing season when subject to an Order, (b) Pruning/cutting back/removal/disposal of arisings. When subject to an Order, (c) Checking and adjusting any stakes/shelters, ties. When subject to an Order, (d) Removing any stakes/shelters/ties. When subject to an Order, (e) Re-firming plants. Once per year, and (f) Replacement planting. When subject to an Order. (ii) Establishing Woodland: (a) Weeding. Once per year when subject to an Order, (b) Pruning/cutting back/removal/disposal of arisings. When subject to an Order, (c) Thinning/coppicing. When subject to an Order, and (d) Clearing/felling. When subject to an Order. (iii) Maturing Woodland: (a) Pruning/cutting back/removal/disposal of arisings. When subject to an Order, (b) Thinning/coppicing. When subject to an Order, and (c) Clearing/felling. When subject to an Order.

Clause No.		Alterations to be made
	1.4	Scrub which is areas of self-seeded vegetation, predominantly (but not exclusively) gorse, broom, birch and /or bramble, up to a height of approx. 2.5m. Maintenance requirements and frequency are as follows: (a) Cutting back. When subject to an Order except where scrub growth is impacting on (or has the potential to impact on) a sightline area when scrub shall be cut back as required, (b) Clearing. When subject to an Order except where scrub growth is impacting on (or has the potential to impact on) a sightline area when scrub shall be cut back as required, and
		(c) Removal/disposal of arisings. When subject to an Order unless scrub cut is undertaken due to impact on a sightline, when arisings shall be removed from Site as part of the maintenance Operations.
	1.5	Individual trees which are lone trees, or trees with no interlocking canopy with the nearest neighbours, and sporadic trees where there is a loose arrangement of established trees with occasional interlocking canopies. Maintenance and frequency are as follows: (a) Pruning/cutting back. When subject to an Order except where tree growth is impacting on (or has the potential to impact on) a sightline area when the vegetation shall be cut back as required, (b) Removal/treatment of arisings. When subject to an Order unless vegetation removal is undertaken due to impact on a sightline, when arisings shall be removed from Site as part of the maintenance operation, (c) Checking and adjusting any stakes/shelters/ties. Once per year, (d) Removing any stakes/shelters/ties. When subject to an Order, (e) Re-firming plants. Once per year, and (f) Replacement planting. When subject to an Order."
3011		**Management of Waterbodies**
		Reedbeds and Marginal Plants
	9	Delete existing sub-clause 9 and replace with:
		"Reedbeds and marginal plants as described in Appendix 30/11 shall be inspected twice per year in early February and October or at other times stated in Appendix 30/11, and their condition reported to the Overseeing Organisation."

SCOTTISH MINISTERS' REQUIREMENTS

SCHEDULE 9 PART 2

SPECIFICATION FOR OPERATIONS (2)

CONTENTS **Page No.**

APPENDIX 0/3 – LIST OF NUMBERED APPENDICES REFERRED TO IN THE SPECIFICATION AND INCLUDED IN THIS CONTRACT 1

APPENDIX 0/4 – LIST OF DRAWINGS INCLUDED IN THIS CONTRACT 9

APPENDIX 0/5 – SPECIAL NATIONAL ALTERATIONS OF THE OVERSEEING DEPARTMENT OF SCOTLAND 14

SCOTTISH MINISTERS' REQUIREMENTS

SCHEDULE 9 PART 2

SPECIFICATION FOR OPERATIONS (2)

NUMBERED APPENDICES

APPENDIX 0/3 – LIST OF NUMBERED APPENDICES REFERRED TO IN THE SPECIFICATION AND INCLUDED IN THIS CONTRACT

Appendix 0/3 is comprised of two lists, A and B, of Numbered Appendices as follows:

List A is a complete list of Numbered Appendices referred to in the Specification for Highway Works with those not adopted marked 'NOT USED'. List B is a list of Contract-specific numbered Appendices devised for this Contract.

List 'A': List of Numbered Appendices Referred to in the *Specification for Highway Works*			
Page No	**To Be Completed By The Operating Company***	**Appendix No**	**Title**
			INTRODUCTION
N/A (See Sch9P1)		0/1	Contract-Specific Additional Substitute and Cancelled Clauses and Tables included in this Contract
N/A (See Sch9P1)		0/2	Contract-specific Minor Alterations to Existing Clauses and Tables included in this Contract
1		0/3	List of Numbered Appendices Referred to in the Specification and included in this Contract
9		0/4	List of drawings included in this Contract
14		0/5	Special National Alterations of the Overseeing Department of Scotland Wales or Northern Ireland
			PRELIMINARIES
NOT USED		1/1	Temporary Accommodation and Equipment for the Overseeing Organisation
NOT USED		1/2	Vehicles for the Overseeing Organisation
NOT USED		1/3	Communication System for the Overseeing Organisation
NOT USED		1/4	Working and Fabrication Drawings
15		1/5	Testing to be carried out by the Operating Company
NOT USED		1/6	Supply and delivery of Samples to the Overseeing Organisation
NOT USED		1/7	Site Extent and Limitations on Use

List 'A': List of Numbered Appendices Referred to in the *Specification for Highway Works*			
Page No	**To Be Completed By The Operating Company***	**Appendix No**	**Title**
NOT USED		1/8	Operatives for the Overseeing Organisation
17		1/9	Control of Noise and Vibration
NOT USED		1/10	Structures to be Designed by the Operating Company
NOT USED		1/11	Structural Elements and Other Features to be Designed by the Operating Company
NOT USED		1/12	Setting Out and Existing Ground Levels
NOT USED		1/13	Programme of Works
NOT USED		1/14	Payment Applications
NOT USED		1/15	Accommodation Works
18		1/16	Privately and Publicly Owned Services or Supplies
19		1/17	Traffic Safety and Management
27		1/17A	Mobile Lane Closure Risk Assessment Checklist
32		1/17B	Temporary Traffic Regulatory Orders
NOT USED		1/18	Temporary Diversions for Traffic
NOT USED		1/19	Routeing of Vehicles
41		1/20	Recovery Vehicles for Breakdown
NOT USED		1/21	Information Boards
NOT USED		1/22	Progress Photographs
NOT USED		1/23	Risks to Health and Safety from Materials or Substances
NOT USED		1/24	Quality Management System
NOT USED		1/25	Temporary Closed Circuit Television (CCTV) System for the Monitoring of traffic
NOT USED		1/26	Temporary Automatic Speed Camera System for the Enforcement of Mandatory Speed Limits at Roadworks (TASCAR)
NOT USED		1/27	Temporary Automatic Speed Camera System for the Enforcement of Mandatory Speed Limits at Roadworks (TASCAR) – Particular Requirements
			<u>SITE CLEARANCE</u>
NOT USED		2/1	List of Buildings etc to be Demolished or Partially Demolished
NOT USED		2/2	Filling of Trenches and Pipes
51		2/3	Retention of Material Arising from Site Clearance
NOT USED		2/4	Explosives and Blasting
NOT USED		2/5	Hazardous Materials

List 'A': List of Numbered Appendices Referred to in the *Specification for Highway Works*			
Page No	**To Be Completed By The Operating Company***	**Appendix No**	**Title**
52		3/1	FENCING Fences Gates and Stiles
54		4/1	ROAD RESTRAINT SYSTEMS (VEHICLE AND PEDESTRIAN) Road Restraint Systems (Vehicle and Pedestrian)
57		4/2	Information Required to Demonstrate Compliance of Road Restraint Systems to BS EN 1317-1, BS EN 1317-2, BS EN 1317-3 and DD ENV 1317-4: 2002
			DRAINAGE AND SERVICE DUCTS
63		5/1	Drainage Requirements
68		5/2	Service Duct Requirements
69		5/3	Surface Water Channels and Drainage Channel Blocks
70		5/4	Fin Drains and Narrow Filter Drains
71		5/5	Combined Drainage and Kerb Systems
NOT USED		5/6	Linear Drainage Channel Systems
72		5/7	Thermoplastics Structural Wall Pipes and Fittings
			EARTHWORKS
74		6/1	Requirements for Acceptability and Testing etc of Earthworks Materials
83		6/2	Requirements for Dealing with Class U1B and Class U2 Unacceptable Materials
84		6/3	Requirements for Excavation Deposition Compaction (Other than Dynamic Compaction)
NOT USED		6/4	Requirements for Class 3 Material
85		6/5	Geotextiles Used to Separate Earthworks Materials
NOT USED		6/6	Fill to Structures and Fill Above Structural Foundations
`NOT USED		6/7	Sub-formation and Capping and Preparation and Surface Treatment of Formation
86		6/8	Topsoiling
NOT USED		6/9	Earthwork Environmental Bunds, Landscape Areas, Strengthened Embankments
87		6/10	Ground Anchorages, Crib Walling and Gabions
NOT USED		6/11	Swallow Holes and Other Naturally Occurring Cavities and Disused Mine Workings
NOT USED		6/12	Instrumentation and Monitoring

List 'A': List of Numbered Appendices Referred to in the *Specification for Highway Works*			
Page No	**To Be Completed By The Operating Company***	**Appendix No**	**Title**
NOT USED		6/13	Ground Improvement
88		6/14	Limiting Values for Pollution of Controlled Waters
89		6/15	Limiting Values for Harm to Human Health and the Environment
			ROAD PAVEMENTS – GENERAL
90		7/1TS	Flexible Pavement Options (Schedules 1, 2, 3, 4 and 5)
100		7/2	Excavation, Trimming and Reinstatement of Existing Surfaces
101		7/3	Surface Dressing – Performance Specification (Sheets 1, 2 and 3)
106		7/4	Bond Coats, Tack Coats and Other Bituminous Sprays (Sheets 1, 2 and Binder Data Sheet)
NOT USED		7/5	In Situ Recycling: The Remix and Repave Process
109		7/6	Breaking Up or Perforation of Existing Pavement
110		7/7	Slurry Surfacing Incorporating Microsurfacing (Sheets 1, 2 and 3)
NOT USED		7/8	Not Used
115		7/9	Cold-Milling (Planing) of Bituminous Bound Flexible Pavement
NOT USED		7/10	Worksheet Pro Forma for Results of Testing for Constituent Materials in Recycled Aggregate and Recycled Concrete Aggregate
NOT USED		7/11	Overband and Inlaid Crack Sealing Systems
116		7/12	Arrester Beds
117		7/13	Saw-Cut and Seal Bituminous Overlays on Existing Jointed Concrete Pavements
118		7/14	Preparation of Jointed Concrete Pavements Prior to Overlaying and Saw-Cut and Seal of the Bituminous Overlay
NOT USED		7/15	Saw-Cut, Crack and Seat Existing Jointed Reinforced Concrete Pavements
NOT USED		7/16	Cracking and Seating of Existing Jointed Unreinforced Concrete Pavements and CBM Bases
NOT USED		7/17	Cracking Plant and Equipment Progress Record
119		7/18	Site Specific Details and Requirements for Cold Recycled Bitumen Bound Material

List 'A': List of Numbered Appendices Referred to in the *Specification for Highway Works*			
Page No	**To Be Completed By The Operating Company***	**Appendix No**	**Title**
NOT USED		7/19	Site Specific Details and Requirements for Recycled Cement Bound Material
NOT USED		7/20	Site Specific Details and Requirements for Inducing Cracks
NOT USED		7/21	Surface Dressing – Recipe Specification (Sheets 1, 2, and Binder Data Sheet)
120		7/22	Repairs to Potholes
			ROAD PAVEMENTS – CONCRETE AND CEMENT BOUND MATERIALS
NOT USED		10/1	Plant and Equipment for the Construction of Exposed Aggregate Concrete Surface
			KERBS FOOTWAYS AND PAVED AREAS
123		11/1	Kerbs Footways and Paved Areas
139		11/2	Access Steps
			TRAFFIC SIGNS
140		12/1	Traffic Signs: General
143		12/2	Traffic Signs: Marker Posts
145		12/3	Traffic Signs: Road Markings and Studs
NOT USED		12/4	Traffic Signs: Cones, Cylinders, FTDs, and Other Traffic Delineators
146		12/5	Traffic Signs: Traffic Signals
NOT USED		12/6	Traffic Signs: Special Sign Requirements on Gantries
			ROAD LIGHTING COLUMNS AND BRACKETS, CCTV MASTS AND CANTILEVER MASTS
NOT USED		13/1	Information to be Provided when Specifying Lighting Columns and Brackets
147		13/2	(Specification for Highway Works) Typical Lighting Column and Bracket Data Sheets 1 and 2
151		13/3	Instructions for Completion of Lighting Column and Bracket Data Sheets
NOT USED		13/4	Information to be Provided When Specifying CCTV Masts
NOT USED		13/5	(Specification for Highway Works) Typical CCTV Mast Data Sheet
NOT USED		13/6	Instructions for Completion of CCTV Mast Sheets
NOT USED		13/7	Information to be Provided When Specifying Cantilever Masts
NOT USED		13/8	(Specification for Highway Works) Typical Cantilever Masts Data Sheets 1 and 2
NOT USED		13/9	Instructions for Completion of Cantilever Masts Data Sheets

List 'A': List of Numbered Appendices Referred to in the *Specification for Highway Works*			
Page No	**To Be Completed By The Operating Company***	**Appendix No**	**Title**
			ELECTRICAL WORK FOR ROAD LIGHTING AND TRAFFIC SIGNS
NOT USED		14/1	Site Records
NOT USED		14/2	Location of Lighting Units and Feeder Pillars
NOT USED		14/3	Temporary Lighting
NOT USED		14/4	Electrical Equipment for Road Lighting
NOT USED		14/5	Electrical Equipment for Traffic Signs
			MOTORWAY COMMUNICATIONS
NOT USED		15/1	Motorway Communications
NOT USED		15/2	Cable Duct Requirements
			PILING AND EMBEDDED RETAINING WALLS
NOT USED		16/1	General Requirements for Piling and Embedded Retaining Walls
NOT USED		16/2	Precast Reinforced and Prestressed Concrete Piles and Precast Reinforced Concrete Segmental Piles
NOT USED		16/3	Bored Cast-in Place Piles
NOT USED		16/4	Bored Piles Constructed using Continuous Flight Augers and Concrete or Grout Injection through Hollow Auger Stems
NOT USED		16/5	Driven Cast-in-Place Piles
NOT USED		16/6	Steel Bearing Piles
NOT USED		16/7	Reduction of Friction on Piles
NOT USED		16/8	Non-Destructive Methods for Testing Piles
NOT USED		16/9	Static Load Testing of Piles
NOT USED		16/10	Diaphragm Walls
NOT USED		16/11	Hard/Hard Secant Pile Walls
NOT USED		16/12	Hard/Soft Secant Pile Walls
NOT USED		16/13	Contiguous Bored Pile Walls
NOT USED		16/14	King Post Walls
NOT USED		16/15	Steel Sheet Piles
NOT USED		16/16	Integrity Testing of Wall Elements
NOT USED		16/17	Instrumentation for Piles and Embedded Walls
NOT USED		16/18	Support Fluid
			STRUCTURAL CONCRETE
153		17/1	Schedule for the Specification of Designed Concrete
157		17/2	Concrete – Impregnation Schedule
158		17/3	Concrete – Surface Finishes
159		17/4	Concrete – General
161		17/5	Buried Concrete
NOT USED		17/6	Grouting and Duct Systems for Post-tensioned Tendons

List 'A': List of Numbered Appendices Referred to in the *Specification for Highway Works*			
Page No	**To Be Completed By The Operating Company***	**Appendix No**	**Title**
NOT USED		18/1	STRUCTURAL STEELWORK Requirements for Structural Steelwork
166		19/1	PROTECTION OF STEELWORK AGAINST CORROSION (Specification for Highway Works) Form HA/P1 (New Works) Paint System Sheet
NOT USED		19/2	Requirements for Other Work
168		19/3	(Specification for Highway Works) Form HA/P2 Paint Data Sheet
170		19/4SE	(Specification for Highway Works) Form SEDD/P3 Paint Sample Despatch List: Sheets 1 and 2
NOT USED		19/5	General Requirements
173		20/1	WATERPROOFING FOR CONCRETE STRUCTURES Waterproofing for Concrete Structures
NOT USED		21/1	BRIDGE BEARINGS Bridge Bearing Schedule
NOT USED		23/1	BRIDGE EXPANSION JOINTS AND SEALING OF GAPS Bridge Deck Expansion Joints Schedule
NOT USED		23/2	Sealing of Gaps Schedule (Other than in Bridge Deck Expansion Joints)
174		24/1	BRICKWORK Brickwork, Blockwork and Stonework
NOT USED		25/1	SPECIAL STRUCTURES Requirements for Corrugated Steel Buried Structures
NOT USED		25/2	Requirements for Reinforced Soil and Anchored Earth Structures
NOT USED		25/3	Requirements for Pocket – Type and Grouted – Cavity Reinforced Brickwork Retaining Wall Structures
NOT USED		25/4	Environmental Barriers
NOT USED		25/5	Requirements for Buried Rigid Pipes for Drainage Structures
176		26/1	MISCELLANEOUS Ancillary Concrete
NOT USED		26/2	Bedding Mortar
NOT USED		26/3	Cored Thermoplastic Node Markers
177		30/1	LANDSCAPE AND ECOLOGY General, sheets 1, 2 and 3
181		30/2	Weed Control
183		30/3	Control of Rabbits and Deer
184		30/4	Ground Preparation

List 'A': List of Numbered Appendices Referred to in the *Specification for Highway Works*			
Page No	**To Be Completed By The Operating Company***	**Appendix No**	**Title**
185		30/5	Grass Seeding, Wildflower Seeding and Turfing
190		30/6	Planting
200		30/7	Grass, Bulbs and Wildflower Maintenance
202		30/8	Watering
203		30/9	Establishment Maintenance for Planting
205		30/10	Maintenance of Established Trees and Shrubs
208		30/11	Management of Waterbodies
209		30/12	Special Ecological Measures
			MAINTENANCE PAINTING OF STEELWORK
224		50/1	(Specification for Highway Works) Form HA/P1 (Maintenance) Paint System Sheet
NOT USED		50/2	Requirements for Other Work
227		50/3	(Specification for Highway Works) Form HA/P2 Paint Data Sheet
229		50/4SE	(Specification for Highway Works) Form HA/P3 Paint Sample Despatch List: Sheets 1 and 2
232		50/5	General Requirements

* For individual Operations Instructions the Operating Company shall compile the appropriate numbered Appendices giving specific information appropriate to the Instruction in accordance with the other provisions of this Contract.

List 'B': List of Contract-Specific Numbered Appendices devised for this Contract		
Page No.	**Appendix No.**	**Appendix Title**
		PRELIMINARIES
46	1/75	Operating Company Vehicle Liveries
48	1/76	Incident Support Unit and Trunk Road Incident Support Service Operatives' Uniforms
49	1/77	Specification for TRISS Vehicle Mobile CCTV System
50	1/78	Specification for Vehicle Mounted Variable Message Signs
		STRUCTURAL CONCRETE
162	17/70	Schedule for the Specification of an Alternative Designed Concrete.
		STRUCTURAL STEELWORK
164	18/70	Weld Repairs on Orthotropic Steel Decks
		INCIDENT RESPONSE OPERATIONS
210	32/1	Incident Response
		SITE INVESTIGATION
216	33/1	Structural Investigations Test Requirements
		PROFESSIONAL SERVICES
233	62/1	Requirements for Professional Services

APPENDIX 0/4 – LIST OF DRAWINGS INCLUDED IN THIS CONTRACT

1 **CONTRACT-SPECIFIC DRAWINGS SUPPLIED TO EACH TENDERER**

1.1 None.

2. **STANDARD DRAWINGS**

2.1 **Supplied to Each Tenderer**

2.1.1 Standard Drawings for this Contract listed below are contained in Schedule 9 Part 3.

Drawing No.	Title
400/15/001	Pedestrian Guard Rail Type G1
500/01/337-379	Drainage and Service Ducts – Duct Groups D1 - D4
500/05/160-166	Drainage and Service Ducts – Drawpits DP1- DP2
500/05/169-178	Drainage and Service Ducts – Gully Types G1- G4
500/06/001	Headwall Type 1 – Brickwork
500/06/010	Headwall Type 1 – Mass Concrete
500/06/019	Headwall Type 3 – Reinforced Concrete
500/16/001-012	Protection of Public Utility Apparatus and Drainage – Protection Type P1 – P4
1100/01/001-019	Kerb Types K1 to K4
1100/01/025-037	Kerb Types K5 to K7
1100/01/040	Kerb Types K8 and K9
1100/01/043	Kerb Types K10 and K11
1100/01/046	Kerb Types K12 and K13
1100/01/052	Kerb Types K16 and K17
1100/01/061-082	Kerb Types K20 to K24
1100/01/085-115	Channel Types C1-C6
1100/01/118	Edging Type E1
1100/01/136-139	Kerb Type Quadrants Q1 and Q2
1100/02/124-127	Combined Kerb and Drainage System Types DK1 and DK2
1100/02/130	Combined Kerb and Drainage System Types DK3
1100/02/133	Combined Kerb and Drainage System Outfall Types DK4
1100/05/001-010	Footways, Footpaths, Paved Areas and Cycleways Types F1 to F4
1100/05/013-016	Footways, Footpaths, Paved Areas and Cycleways Types F5 and F6
1100/05/019-028	Footways, Footpaths, Paved Areas and Cycleways Types F7 to F10
1100/05/031-040	Footways, Footpaths, Paved Areas and Cycleways Types F11 to F14

Drawing No.	Title
1100/05/043-052	Footways, Footpaths, Paved Areas and Cycleways Types F15 to F18
1100/05/055-064	Footways, Footpaths, Paved Areas and Cycleways Types F19 to F22
1100/05/067-073	Footways, Footpaths, Paved Areas and Cycleways Types F23 to F25
1100/05/085 & 088	Recessed Gullies GS1 and GS2 with Kerb Surround
1200/07/001	Precast Concrete Bollard Type B1
1200/08/001	Verge hazard marker posts Type VM1
1200/08/002	Verge hazard marker posts Type VM2A and VM2B
1200/09/001	Edge of Carriageway Hazard Markers Type ECB1
1200/10/1	Details for Sign Post Foundation Sheet 1 of 2
1200/10/2	Details for Sign Post Foundation Sheet 2 of 2
MCX 0138 (Modified)	Typical Access Steps

2.2 **Inspected by Tenderer**

2.2.1 None.

2.3 **Brought into this Contract by Reference**

Highway Construction Details published by the Stationary Office (formerly HMSO) as Volume 3 of the Manual of Contract Documents for Highway Works contains the following drawings brought into this Contract by reference. Unless otherwise stated below the whole drawing is brought into this Contract.

Drawing No.	Title	Date	Aspect/Alternative(s) required if whole Drawing is not included in Contract
F1	Surface Water Drains – Trench and Bedding Details	Dec 91	
F2	Filter Drains – Trench and Bedding Details	Nov 03	
F3	Type 1 Chamber (Brick or In Situ Concrete Manhole)	May 06	
F4	Type 2 Chamber (Precast Concrete Manhole)	May 06	
F5	Type 3 Chamber (Precast Concrete Manhole)	May 06	
F6	Type 4 Chamber (Precast Concrete Manhole)	May 06	
F7	Type 5 Chamber (Precast Concrete Manhole)	May 06	
F9	Type 5 Chamber Grating Details	May 01	

Drawing No.	Title	Date	Aspect/Alternative(s) required if whole Drawing is not included in Contract
F10	Chamber Fittings – Ladder, Handhold and Safety Chain	Nov 03	
F11	Type 7 Chamber (1050 Catchpit)	May 06	
F12	Type 8 Chamber (600 Catchpit)	May 06	
F13	Precast and In Situ Cast Gullies	May 06	
F14	Sumpless Gully Chamber and Alternative Rising Section	May 06	
F15	Drainage Channel Blocks Types A, B and C	Nov 04	
F16	Drainage Channel Blocks Types D, E and F	Nov 04	
F17	Detail of Keyways and Keys for Manhole Tops and Kerb Type Gully Tops	Mar 98	
F18	Edge of Pavement Drains – Fin Drains and Narrow Filter Drains	Dec 91	
F19	Edge of Pavement Drains – Installation of Fin Drains	Dec 91	
F20	Edge of Pavement Drains – Installation of Narrow Filter Drains	Dec 91	
F25	Type 9 Chamber (Brick or In Situ Concrete Shallow Inspection Chamber)	May 06	
F26	Type 10 Chamber (Brick or In Situ Concrete Shallow Inspection Chamber)	May 06	
F27	Type 9 Chamber (Precast Concrete Deep Inspection Chamber)	May 06	
F28	Chamber Fittings – Guardrail	Nov 03	
H1	Temporary Fences Types 1 and 2	May 04	
H2	Temporary Fences Types 3 and 4	May 04	
H3	Motorway and Accommodation Works Timber Post and 4 (or 5) Rail Fences	May 04	
H4	Motorway and Accommodation Works High Tensile Strained Wire Deer Fences 135	May 04	
H5	Motorway and Accommodation Works High Tensile Strained Wire Deer Fences 180	May 04	
H6	Motorway and Accommodation Works High Tensile Strained Wire Deer Fences 210	May 04	
H7	Turning Posts Strained Wire Fences	Dec 91	
H8	General Details Strained Wire Fences Sheet 1	May 01	

Drawing No.	Title	Date	Aspect/Alternative(s) required if whole Drawing is not included in Contract
H9	General Details Strained Wire Fences Sheet 2	Dec 91	
H10	General Details Strained Wire Fences Sheet 3	Dec 91	
H11	Accommodation Works Chain link Fences	May 04	
H12	Accommodation Works Rectangular Wire Mesh and Hexagonal Wire Netting Fences	Aug 93	
H13	Accommodation Works Strained Wire Fences (General Pattern)	May 04	
H14	Accommodation Works Timber Palisade and Close Boarded Fences	May 04	
H15	Accommodation Works Wooden Post and 3 Rail Fences	May 04	
H16	Accommodation Works Woven and Lap Boarded Panel Fences	May 04	
H17	Steel Single Field Gate	May 04	
H18	Steel Half Mesh Single Field Gate	May 04	
H19	Steel Extra Wide Single Field Gate	May 04	
H20	Steel Double Field Gate	May 04	
H21	Timber Single Field Gate	May 04	
H22	Timber Double Field Gate	May 04	
H23	Timber Wicket Gate Type 1	May 04	
H24	Timber Wicket Gate Type 2	May 04	
H25	Timber Kissing Gate	May 04	
H26	Hinges for Steel Field Gates	May 01	
H27	'D' Latch for Steel Single Field Gates	Dec 91	
H28	Sliding Bolt Latch Type B for Steel Single Field Gates	Dec 91	
H29	Tubular Steel Latch for Steel Double Field Gate	Dec 91	
H30	Hinges for Timber Field Gates	Dec 91	
H31	Spring Catch for Single Timber Field Gates	Dec 91	
H32	Latch and Drop Bolt for Timber Double Field Gate	Dec 91	
H33	Standard Gate Stops	Dec 91	
H34	Timber Stile Type 1	May 04	
H35	Timber Stile Type 2	May 04	
H36	Diagrammatic Methods of Attaching Fencing to Structures	Nov 06	
H37	Rules for the Selection of Non Structural Timber for Use in Environmental Barriers – Sheet 1	Dec 91	

Drawing No.	Title	Date	Aspect/Alternative(s) required if whole Drawing is not included in Contract
H38	Rules for the Selection of Non Structural Timber for Use in Environmental Barriers – Sheet 2	Mar 98	
H39	Planting Works Fencing Rabbit and Deer Fencing Types 1 and 2	May 01	
H40	Planting Works Fencing Rabbit and Deer Fencing Types 3, 4 and 5	May 01	
H41	Planting Works Fencing Gate	May 01	
H42	Planting Works Fencing Stile Types 3, 4 and 5	May 01	
H43	Planting Works Fencing Fenced Tree Guards Types 1, 2 and 3	May 01	
H44	Planting Works Fencing Urban Area Fencing	May 01	
H45	Badger Gate	May 01	
H46	Attachment of Wire Mesh to Fencing (Sheet 1 of 3)	May 01	
H47	Attachment of Wire Mesh to Fencing (Sheet 2 of 3)	May 01	
H48	Attachment of Wire Mesh to Fencing (Sheet 3 of 3)	May 01	
K4	Typical Trench Reinstatement Details for Bituminous and Concrete Pavements	May 04	Bituminous aspect only
K5	Planting Details for Planting Large Trees	May 01	

APPENDIX 0/5 – SPECIAL NATIONAL ALTERATIONS OF THE OVERSEEING DEPARTMENT OF SCOTLAND

Page No.	Appendix No.	Appendix Title
Page No	7/1TS	ROAD PAVEMENTS – GENERAL Flexible Pavement Options (Schedules 1, 2, 3, 4 and 5)
Page No	19/4SE	PROTECTION OF STEELWORK AGAINST CORROSION (Specification for Highway Works) Form SEDD/P3 Paint Sample Despatch List: Sheets 1 and 2
Page No	50/4SE	MAINTENANCE PAINTING OF STEELWORK (Specification for Highway Works) Form HA/P3 Paint Sample Despatch List: Sheets 1 and 2

APPENDIX 1/5 – TESTING TO BE CARRIED OUT BY THE OPERATING COMPANY

1 The Operating Company shall carry out sampling and testing as required in this Contract.

The Operating Company shall include sampling and testing as described in Notes for Guidance for the *Specification for Highway Works* Table NG 1.1 for the Operations in its Management System including the Quality Plan as an Inspection and Test Plan, which shall include similar sampling and testing for products not included in Table NG 1.1 but proposed by the Operating Company.

Once the Overseeing Organisation has given its written consent to the Inspection and Test Plan the Operating Company shall adhere to this plan for all Operations unless a revised plan is subsequently consented to by the Overseeing Organisation. The Inspection and Test Plan shall also include the Operating Company's sampling and testing frequencies for Operations, to ensure that the frequency and type of testing across the Unit shall be compatible with this Specification and shall be acceptable to the Overseeing Organisation.

Operations falling below the minimum testing frequency shall be tested at a frequency consented to by the Overseeing Organisation which may include the aggregating of quantities of materials at individual Sites. The Operating Company shall produce supplements to the Inspection and Test Plan consented to by the Overseeing Organisation to cover such Operations.

APPENDIX 1/9 – CONTROL OF NOISE AND VIBRATION

1 The Operating Company shall comply with the following requirements:

(i) All Plant used for constructional and operations shall be the quietest of its type practical for carrying out the work required and shall be maintained in good condition to minimise noise output.

(ii) All Constructional Plant shall be operated and maintained in accordance with the manufacturer's written recommendations including the use and maintenance of any specific noise reduction measures.

(iii) Best practicable means shall be employed including as a minimum the positioning of Constructional Plant and activities to minimise noise at sensitive locations, the use of mufflers on pneumatic tools, the use of non-reciprocating Constructional Plant and the use, where practical, of effective sound reducing enclosures to ensure all Constructional Plant used in connection with Works operates with the minimum of noise.

(iv) Mechanical plant with directional noise characteristics shall be positioned to minimise noise at adjacent receptors.

(v) Static machines shall be sited as far away as practicable from receptors.

(vi) In built-up areas where it is necessary to provide power for the running of traffic signals, pumps and other powered plant at any time outwith Normal Working Hours the source of such power shall be mains electricity.

2 During Normal Working Hours the equivalent continuous sound level (Leq) shall not exceed the following measured 1 metre outside the facades of any adjacent occupied buildings:

(i) 70 dB(A) 12 hour value of Leq,

(ii) 73 dB(A) six hour value of Leq (provided the six hours fall within the period 0800 to 1600 hours),

(iii) 76 dB(A) three hour value of Leq (provided the three hours fall within the period 0900 to 1300 hours), and

(iv) 85 dB(A) at any instant (slow response).

3 The limit of 12 hour value of Leq shall always be met so that when the higher levels occur the levels permitted throughout the remainder of the Normal Working Hours shall become progressively lower than the overall limit imposed.

4 The Operating Company shall arrange for leaflets to be delivered to residents within 200 metres of the proposed work, giving a full description of the proposed work, their duration, and of the sources, character and levels of noise expected to arise, including a named contact to respond to any noise or vibration concerns or nuisance.

5 In addition to the foregoing noisy activities shall be avoided at night (between 1 hour before dusk and 1 hour after dawn) during the post-breeding/ passage period for terns (between 15 August and 31 October). If it is unavoidable that noise limits will

be breached between 15 August and 31 October, then Port Edgar and Long Craig Island shall not be simultaneously impacted as one can be used as a refuge for roosting terns if the other is disturbed.

6 The Operating Company shall employ a ‘soft-start’ to all noisy activities. Each time the activity is started up after any period of inactivity, the noise levels will be gradually increased over a period of 30 minutes to allow birds (and other animals) to relocate. This shall apply year round. For the first seven days after the commencement of each noisy activity, the soft-start shall be applied each time the machinery is stopped, even if this is only for very short periods.

7 The Operating Company shall use best practicable means to maintain noise levels below 75 dBLAeq day and night: at: (i) Long Craig Island at all times of day and night during the tern breeding season (01 May until 15 August in any given year) and (ii) Long Craig Island and the Port Edgar tern roost site at night (between 1 hour before dusk and 1 hour after dawn) during the post-breeding/ passage period for terns (between 15 August and 31 October in any given year).

APPENDIX 1/16 – PRIVATELY AND PUBLICLY OWNED SERVICES OR SUPPLIES

1 Generally motorways do not contain any privately or publicly owned services or supplies other than:

(i) cabling for the Overseeing Organisations' communication systems,

(ii) cabling for road lighting and lit signs on the Unit,

(iii) overhead power lines crossing the motorways, and

(iv) a small number of major pipelines and cables which cross the motorways in ducts.

Subject to the other provisions of this Contract, Trunk Roads may contain in addition to all types of Undertakers' equipment and services, cabling for communications systems, variable message signs, automatic traffic counters, closed circuit television systems, road ice prediction sensors, road lighting systems, lit signs and other cabled equipment.

There may be overhead power and communication cables.

The Operating Company shall co-ordinate Operations with work required to be carried out by Undertakers or their contractors or other third parties.

The Operating Company shall maintain a register of apparatus installed following the grant of permission in writing pursuant to *Section 109* of the *New Roads and Street Works Act*, showing details of the location and nature of the apparatus, the persons to whom permission has been granted, and any conditions to which the granting of permission shall be subject.

The Operating Company shall update the register with any such apparatus and relevant associated information that it becomes aware of in the course of its Operations.

The Operating Company shall make arrangements with the Undertakers and others concerned for the phasing of any disconnections and diversion of private services affected by the Site activities.

APPENDIX 1/17 – TRAFFIC SAFETY AND MANAGEMENT

1 RESPONSIBILITY FOR TRAFFIC MANAGEMENT MEASURES

1.1 The Operating Company shall identify, provide, maintain and survey all traffic management measures necessary for its own Operations.

It shall examine proposals for and inspect installations of traffic management for activities by others on the Unit for compliance with relevant Legislation and the standards referred to in this Contract and shall immediately report any failings to the organisation concerned and notify the Overseeing Organisation in writing of significant failings.

Where practicable, a photographic record of any failings shall be maintained.

1.1.1 Such activities by others include as a minimum:

(i) major work for resurfacing, reconstruction and bridgework on any part of the Unit,

(ii) work for improvement work on any part of the Unit,

(iii) maintenance of Traffic Scotland Equipment and the Traffic Scotland Systems Contractor equipment,

(iv) installation, maintenance, removal, of emergency telephones and hazard warning signals, variable message signs for snow gates, matrix signals and variable message signs, automatic data collection systems and closed circuit television systems,

(v) technical surveys and minor specialist activities,

(vi) installation, maintenance, removal, of Undertakers' equipment and apparatus,

(vii) landscape maintenance for Works Contracts,

(viii) installation, maintenance, removal of Trafficmaster equipment or the equipment of any alternative or replacement company notified by the Director,

(ix) authorised work being undertaken on the Trunk Road by private developers, and

(x) galas and Special Events.

1.2 The Operating Company shall complete Mobile Lane Closure Risk Assessment Checklists as contained in Annex 1/17A. The checklists shall be held within the Central Office.

1.3 All vehicles engaged in Operations, Inspections or Works shall conform to *Traffic Signs Manual Chapter 8* Part 2 Section 5.

Vehicles shall have a sign board reading 'Motorway Maintenance' or 'Road Maintenance' (to Diagram 7404 of Schedule 12 Part V of *The Traffic Signs Regulations and General Directions 2002*) fixed at the rear.

The lettering shall be 150 mm 'x height' except that for light vans and cars it shall be the largest 'x height' that can be accommodated out of the followings heights 37.5, 50, 62.5 or 100 mm.

The lettering shall be black capital letters from the alphabet described in *The Traffic Signs Regulations and General Directions 2002* Schedule 13 Part II on a yellow non-reflectorised background in accordance with BS 381C colour No 355.

All vehicles engaged in Operations, Inspections or Works shall be provided with roof-mounted beacons as specified in *Traffic Signs Manual Chapter 8* Part 2 Section O5.3.

The roof-mounted beacons shall be switched on:

(i) when the vehicle or Constructional Plant is manoeuvring into or out of the Site of the Operations or operating at low speed on a carriageway or hardshoulder open to vehicles, and

(ii) when the vehicle or Constructional Plant is standing on a carriageway or hardshoulder open to vehicles.

1.4 All vehicles and Constructional Plant operating within any Site between sunset and sunrise and during periods of poor visibility and fog shall have mandatory lights illuminated and shall travel in the same direction of flow as the adjacent traffic.

Vehicles travelling within any Site against the adjacent traffic flow shall not have headlights on or be similarly illuminated and shall keep as far away as possible from the Lanes open to vehicles.

1.5 The Operating Company shall have clear method statements covering all relevant closure types used on the Unit.

The method statements confirmed in the Management System shall be in accordance with Sector Scheme 12 as referred to in Appendix A.

1.6 In addition to the requirements of Schedule 3 Part 7 the Operating Company shall notify and consult with all parties directly affected by any Operations, Works and or work carried out by others.

1.7 The Operating Company shall consult the appropriate roads authority regarding any diversion routes and shall comply with the reasonable requirements of the roads authority.

Should the roads authority stipulate any requirements for which the Operating Company considers that an Order is required to meet such requirements, or considers the requirements to be unreasonable, the Operating Company shall immediately refer such requirements to the Overseeing Organisation in writing. The Operating Company shall not undertake any Operations or Works in respect of the requirements unless required to do so by the Overseeing Organisation.

2 TRAFFIC SAFETY AND MANAGEMENT REQUIREMENTS

2.1 Layouts for traffic safety and management shall be in accordance with:

(i) the advice and plans contained in Chapter 8 of the *Traffic Signs Manual* published by *The Stationery Office*.

Where constraints of the Trunk Road network or other roads do not allow full compliance with Chapter 8, alternative proposals, fully supported with risk assessments, shall be submitted for written consent by the Overseeing Organisation,

(ii) Departmental Standards and Advice Notes as set out in the DMRB, and

(iii) codes of practice in the case of work carried out pursuant to the *New Roads and Street Works Act.*

2.2 When planning Operations, Works or co-ordinating with work by others all traffic safety and management shall comply with the Code of Practice *The Reduction of Traffic Delays at Roadwork's* published by the Scottish Office and the County Surveyor's Society in Scotland 1992.

2.3 When planning Operations, Works or co-ordinating with work by others the Operating Company shall ensure that when safe access to central reservations is available the area of the central reservations protected by traffic management, including carriageway channels, is restored to a clean and tidy condition with a minimum standard of Grade B as stated in the *Code of Practice on Litter and Refuse* before traffic management measures are removed.

2.4 Operations shall take account of local events and shall be planned and carried out in accordance with any standing local agreements.

2.5 Guidance on the permissions, planning and organisation of galas can be obtained from http://www.scotland.gov.uk/Publications/2005/07/14155315/53182. or its equivalent.

2.6 The Operating Company shall optimise all traffic management measures for Operations, Works and work carried out by others to minimise overall disruption to traffic.

2.7 The Operating Company shall liaise and co-operate with Traffic Scotland Operations and Infrastructure Service Contractor, local roads authorities and Emergency Services to ensure that traffic diverted from Trunk Roads on to the non-trunk road network and vice versa has the minimum impact on both networks and shall not adversely affect the performance of the Emergency Services.

2.8 Where others undertake work within the Unit the Operating Company shall ensure that the organisation responsible for carrying out such work erects information signs as defined in the *Traffic Signs Regulations and General Directions (2002)* sign reference 7008.

2.9 The Operating Company shall provide temporary mandatory speed restrictions at any Site involving a Type A closure as defined in Chapter 8 of the *Traffic Signs Manual* published by *The Stationery Office* subject to approval of the Overseeing Organisation and the relevant Temporary Traffic Order being in place.

The extent and temporary speed limit proposed by the Operating Company shall take cognisance of the existing speed limit, the surrounding environment (urban and rural) and the nature of the Operations.

2.10 The Operating Company shall employ methods of working within the Unit such that wherever practicable all obstructions can be removed from a carriageway and that traffic Lanes or hardshoulders can be re-opened to vehicles within 30 minutes of a requirement to have the traffic management removed.

2.11 Traffic management measures shall be monitored and modified by the Operating Company to ensure traffic delays are minimised.

When traffic signals are in use queue lengths shall be monitored to ensure that the phase settings result in equal queue lengths and shall be adjusted appropriately to accommodate varying flows.

2.12 The Operating Company shall make good any damage or disturbance to temporary signs or other traffic management measures within 30 minutes on motorways and dual carriageways and 2 hours on single carriageways of the Operating Company becoming aware of such damage or disturbance.

3 TEMPORARY TRAFFIC REGULATION ORDERS

3.1 Where the Operations or work by others require the promotion of Temporary Traffic Regulation Orders (TTROs) the Operating Company shall provide all such information as is identified in Annex 1/17B to this Appendix to the Overseeing Organisation.

Where such TTROs can be used by both the Operating Company and other bodies this shall form part of the traffic management arrangements.

Where an individual TTRO is required for the specific work or operations promoted by others these shall be subject to an Order.

3.2 A TTRO will be promoted by the Scottish Ministers to allow one carriageway of motorways or dual carriageways to be closed when a contra-flow is installed and the adjacent carriageway is used as the alternative route.

The closure of only one Lane including a hardshoulder will not require a TTRO provided that the remainder of the carriageway is still available for traffic.

3.3 Where a carriageway or slip road is to be closed, other than due to an Incident, and the diversion involves any road other than the adjacent carriageway then a TTRO is required.

Where the Operating Company requires a TTRO for such Operations, the Operating Company shall inform the Overseeing Organisation during the planning of the Site activities that a TTRO is required for the Operations being undertaken.

3.4 Where the Operating Company requires a TTRO to impose a speed limit for an Operation the Operating Company shall inform the Overseeing Organisation during the planning of the Site activities that a TTRO is required for the Operations being undertaken.

3.5 Where the Overseeing Organisation agrees with the Operating Company that a TTRO is so required, the Overseeing Organisation will arrange for the publication and making of suchyl TTROs.

The minimum notice required from receipt of all the information identified in sub-clause 3.6 to support the draft TTRO by the Overseeing Organisation to the making or amending of such TTRO is six weeks.

3.6 The Operating Company when submitting information to promote a TTRO shall complete a TTRO1 Form, a draft TTRO, a press notice, a method statement and a plan of the roads affected.

The TTRO1 form, draft TTRO, press notice, and Operating Company checklist shall follow the format given in Annex 1/17B.

3.7 In the case of carriageway closures required as a result of an Incident, the Operating Company shall notify the Overseeing Organisation as soon as is reasonably practicable following the installation of an emergency closure.

3.8 If the Operating Company requires to carry out any remedial or other Site activities and requires a TTRO to be promoted, it shall give the required notice and provide all such information identified in Annex 1/17B to allow the Overseeing Organisation to promote the TTRO and any costs incurred by the Overseeing Organisation shall be recoverable from the Operating Company.

4 RESTRICTIONS ON TRAFFIC MANAGEMENT MEASURES – ERECTION OPERATION AND REMOVAL OF TRAFFIC MANAGEMENT

4.1 Due to the nature of the Trunk Road network and variable traffic flows, restrictions on the hours of working shall apply to parts of the Unit.

4.2 The erection, operation and removal of traffic management may be undertaken by the Operating Company at any time except within the restricted working hours referred to in Table 1/17 in this Appendix.

4.3 With the exception of Operations carried out in respect of Winter Service and Incidents, restricted working hours as referred to in Table 1/17 of this Appendix 1/17 shall apply to all Site activities and Works Contracts in so far as it is practicable.

4.4 The extent of any traffic management layouts shall be limited to single Lane Closures except in extreme circumstances where written consent for different arrangements shall be obtained from the Overseeing Organisation.

4.5 The Operating Company shall seek prior written consent from the Overseeing Organisation before undertaking Site activities or overseeing Works which are inconsistent with the constraints set out in Table 1/17 in this Appendix.

4.6 The Operating Company shall plan Site activities in such a way that traffic management measurements can be removed at the end of each day when work has been carried out in so far as is practicable.

4.7 All signs erected for traffic management purposes which are not relevant to a situation shall be removed or covered immediately.

5 PROXIMITY OF TRAFFIC MANAGEMENT MEASURES

5.1 The minimum distance between Sites, Works or work shall be as specified in paragraph D3.5 in Chapter 8 of the *Traffic Sign Manual* and the following.

The minimum distance from a hardshoulder closure to any other closure upstream or downstream including contraflow shall be 1.0 kilometre.

In this respect:

(i) the distance between such Sites shall be measured from the roadworks 'End' sign of the first Site to the commencement of coning at the second Site,

(ii) traffic management shall not be installed upstream or downstream of an existing layout and then extended to or from the existing layout.

An existing layout may be extended downstream.

6 DRIVER INFORMATION SIGNS

6.1 Information signs forming part of the traffic management arrangements shall be provided.

7 DIVERSION ROUTES

7.1 Standard Incident Diversion Routes

7.1.1 Standard Incident Diversion Routes have been developed for use on the network. These routes are set out in protocol documents, controlled copies of which are held by all the roads authorities and the police within or adjacent to the Unit. The Operating Company shall assume responsibility for the operation, management and updating of Standard Incident Diversion Routes established for use in any response to an Incident in accordance with the protocol documents and the requirements of Schedule 7 Part 3.

7.1.2 The Operating Company shall take action to ensure that all Standard Incident Diversion Routes documentation and protocols be kept under regular review and shall be modified to ensure the requirements of this Contract are met at all times. The Operating Company shall arrange and attend meetings of all the relevant roads authorities and the police to discuss any amendments required to the Standard

Incident Diversion Routes or their operation in accordance with the requirements of Schedule 7 Part 3. The Operating Company shall only make amendments to routes, procedures or signing in consultation with the roads authorities and police authorities affected by the Standard Incident Diversion Routes and with the prior consent of the Overseeing Organisation as set out in Schedule 7 Part 3. The Operating Company shall provide copies of any amendments to Standard Incident Diversion Routes to the holders of controlled copies.

7.2 **Non-Standard Incident Diversion Routes**

7.2.1 If non-standard incident diversion routes are proposed by the Operating Company, the Operating Company shall fully liaise with all relevant roads authorities and the police. A full set of plans and schedules for each non-standard incident diversion route shall be prepared and copies of these distributed to the appropriate authorities.

7.3 Traffic Orders for Diversion Routes

The Overseeing Organisation will arrange all associated Traffic Orders required on the Trunk Road network.

TABLE 1/17 – Working Hours Restrictions for Operations Affecting One Lane Only

Route No.	**Section**	**General Restrictions** **(Dates Days and Hours)**	**Additional Restrictions and Comments** **(Dates Days and Hours)**
From Commencement of Service Date 1 to Commencement of Service Date 2			
M90	between M9 J1A at Humbie and Scotstoun Junction	Monday to Saturday 0600 to 2000 Sunday 0900 to 2000	Closures may be of restricted duration or will not be permitted during or immediately prior the following events: The Royal Highland Show, T in the Park, British Touring Car Championship at Knockhill, British Superbike Championship at Knockhill and other events as notified.
M90/A90	between Dalmeny and M90 Junction 3 Halbeath excluding Forth Road Bridge	Monday to Saturday 0600 to 2000 Sunday 0900 to 2000	Closures may be of restricted duration or will not be permitted during or immediately prior the following events: The Royal Highland Show, T in the Park, British Touring Car Championship at Knockhill, British Superbike Championship at Knockhill and other events as notified.

A823 (M)		Monday to Friday 0600 to 0930 and 1530 to 1930 Saturday 1200 to 1930	
	Forth Road Bridge (between A90 Echline Junction and A90 Ferrytoll Junction)	Monday to Friday 0400 to 2130 Saturday 0800 to 2130 Sunday 0900 to 2130	Closures may be of restricted duration or will not be permitted during or immediately prior the following events: The Royal Highland Show, T in the Park, British Touring Car Championship at Knockhill, British Superbike Championship at Knockhill and other events as notified.
A90	West footpath across Forth Road Bridge	Monday to Sunday 0000 to 2359	
A90	East footpath across Forth Road Bridge	Monday to Sunday 0000 to 2359	
Commencement of Service Date 2 until Service End Date			
M90	between M9 J1A at Humbie and Scotstoun Junction	Monday to Saturday 0600 to 2000 Sunday 0900 to 2000	Closures may be of restricted duration or will not be permitted during or immediately prior the following events: The Royal Highland Show, T in the Park, British Touring Car Championship at Knockhill, British Superbike Championship at Knockhill and other events as notified.
M90/A90	between Dalmeny and M90 Junction 3 Halbeath including the Queensferry Crossing (but excluding Forth Road Bridge)	Monday to Saturday 0600 to 2000 Sunday 0900 to 2000	Closures may be of restricted duration or will not be permitted during or immediately prior the following events: The Royal Highland Show, T in the Park, British Touring Car Championship at Knockhill, British Superbike Championship at Knockhill and other events as notified.
A823 (M)		Monday to Friday 0600 to 0930 and 1530 to 1930 Saturday 1200 to 1930	

A90	West footpath across Forth Road Bridge	Monday to Sunday 0000 to 2359	
A90	East footpath across Forth Road Bridge	Monday to Sunday 0000 to 2359	

ANNEX 1/17A – MOBILE LANE CLOSURE RISK ASSESSMENT CHECKLISTS

1 Checklist: Advance Planning For a Mobile Lane Closure

(All questions should be answered and comments provided where answer is No or supportive information is considered necessary)

In Column P "X" Denotes – Do not proceed with mobile Lane closure if answer is "No".

"G" Denotes – Refer to general guidance information before deciding to proceed with the mobile Lane closure.

No.	Question	Yes	No	Comments	P
1	Is mobile Lane closure suitable for the Operations				X
2	Are traffic flows likely to be below specified levels in Table 6.8 of Chapter 8, Part 1				X
3	Can normal (15 – 20%) heavy goods vehicle flows be expected				G
4	Do sight stopping distances conform to the distances stated in the Highway Code				X
5	Will you be prepared to abort the work during poor visibility				G
6	Will the Site activities avoid introducing a near-side Lane closure on a left hand bend				G
7	Is there a hardshoulder				G
8	Is the hardshoulder continuous				G
9	If no hardshoulder, can advance sign vehicles/trailers be located on verge or close to near-side Lane of carriageway without blocking the near side Lane				X
10	If no hardshoulder, are suitable places on the verge available to site warning vehicles within 1 km before the Site activities				X
11	Will the sun be in a position such that it does not blind drivers throughout				X
12	Will all the Site activities be done so as to avoid dawn / dusk				X
13	Will the mobile Lane closure allow more than one lane to remain open				G
14	Will the Site activities avoid the need for a near-side Lane closure				G
15	Can the Site activities avoid being slow moving				G

No.	Question	Yes	No	Comments	P
16	Will traffic flows be monitored regularly throughout by the team leader / supervisor				G
17	Are uphill gradients less than 4%				G
18	Are downhill gradients less than 4%				G
19	Is the length of Site activities free of junctions				G
20	Are the Site activities to be carried out over a long distance				G
21	Can all the Site activities be carried out from vehicles				G
22	Are variable message signs available and able to be used				G
23	For a 3 Lane carriageway involving a 2 Lane closure can Lanes 2 and 3 be closed to avoid slow moving traffic changing Lanes				G
24	Will the Site activities not take place (or be suspended) if there is a risk of vehicles skidding				G
25	Has there been consultation with the police				G
26	Has the proposed closure been included in the weekly closure notification to Transport Scotland				G
27	Is the team leader clear that mobile Lane closures shall only proceed or remain in place if traffic checks show that flow rates are well within limits				G
28	At night if hardshoulder is less than 3.3 metres wide has this been considered in planning / accepting the Site activities				G
29	If verge marker posts have not been provided, has consideration been given to how vehicles will maintain positions				G
30	Will the Site activities last less than the time required to set up and dismantle the necessary advance signs and taper required for the static closure(s) that would otherwise be required to complete the Operations.				G
31	Are there any other special conditions applying to these Site activities				

Checklist – For Use At Start Of Mobile Lane Closure

No.	Question	Yes	No	Comments
1	Are all vehicle drivers trained and fully competent in the mobile Lane closure technique			
2	Will everyone working on the carriageway have high visibility clothing			
3	Are all advance sign and block vehicles painted yellow and in clean condition			
4	Are operational vehicles fitted with amber warning beacons			
5	Are lorry mounted crash cushions fitted to block vehicles			
6	Is the weight of the block vehicles (including ballast) in the range 7.3 – 17 tonnes			
7	Are head restraints fitted to the drivers and other occupants seats in advance sign and block vehicles			
8	If additional equipment/switches have been provided in the block vehicles cab has a safety survey been carried out			
9	Has a reliable 2-way communications system been provided			
10	Does the communications system include contractors' vehicles			
11	Is it possible to use a dedicated radio channel			
12	Has a contingency plan for failure of communications been made			
13	Are all signs to appropriate standards			
14	Will all signs on the carriageway be vehicle or trailer mounted and attended at all times			
15	Can you confirm that signs will not be manually changed when the vehicle is standing in a live traffic Lane			
16	Do the vehicles rear lights, reflectors and number plates remain clearly visible when the backing board for the sign is fitted			
17	Can you confirm that signs can/will be covered or removed from view when not in use or normal driving of sign vehicle has been resumed			

No.	Question	Yes	No	Comments
18	Are working and block vehicle drivers aware of the minimum/maximum separation distances			
19	Have additional block vehicles been provided where the Site activities require them			Refer to appropriate layout(s)
20	Are variable message signs available and able to be used			
21	For a 3 Lane carriageway involving a 2 Lane closure can Lanes 2 and 3 be closed to avoid slow moving traffic changing Lanes			
22	Where the working vehicle/personnel are operating on the hard shoulder has a block vehicle with a lorry mounted crash cushions been provided and correctly positioned			NB for this work if Site activities vehicle is substantial e.g. gully cleaner / sweeper and is fitted with a lorry mounted crash cushions block vehicle may be dispensed with.
23	If no hardshoulder, can advance sign vehicles/trailers be located on verge or close to n/s of carriageway without blocking the n/s Lane			
24	If no hardshoulder are suitable places on the verge available to site warning vehicles within 1 km of the start of the Site activities			
25	For Site activities on foot can worker remain within the area on the non-trafficked side between the front of the leading vehicle and 10 metres in front of the second vehicle			Refer to appropriate layout(s)
26	For Site activities on foot on a central reserve to prevent traffic passing between the block vehicle and the central reserve safety fence is an additional block vehicle required			Refer to appropriate layout(s)
27	Will suitable high visibility clothing be provided and worn			
28	Can all advance sign display and covering for mobile Lane closure be carried out on the hard shoulder (if available) or on a lightly trafficked road			NB. The establishment or covering of vehicle mounted signs should never be undertaken on an on-slip or off-slip road.
29	Has a team leader(s) been appointed and made known to all drivers including contractors			
30	If circumstances require has an additional supervisor been provided and responsibilities clearly established			

No.	Question	Yes	No	Comments
31	Has the need for a relief driver fully trained and capable of replacing any other driver been considered and provided if required			
32	Can you confirm that all personnel have received adequate training			
33	If heavy goods vehicle levels are 30% have vehicle flow levels been decreased by 10%			See traffic count
34	For Site activities at night where there is an occasional short discontinuity of the hardshoulder has the maximum traffic flow been reduced by 10%			

ANNEX 1/17B – TEMPORARY TRAFFIC REGULATION ORDERS

Sample Request Form for Temporary Traffic Regulation Order Request [TTRO1]

A TTRO request in the following format shall be completed by the Operating Company and sent by e-mail to the relevant Area Manager and Network Administrator in TRBO with a draft Order, Press Notice and Method Statement (hard copies shall follow by post together with completed Operating Company checklist).

(i) Name and Route Number of Trunk Road

_____

(ii) Type of Order

Temporary Prohibition of Traffic	(Full Temporary Order)
Temporary Restriction of Traffic	(Full Temporary Order)
Blue Notice – Danger	(Maximum 21 days)
Blue Notice – Works	(Maximum 5 days)
Other (Specify type of Traffic Order)	

_____

(iii) State the reason(s) for requesting the Traffic Order

_____

(iv) Give a full description of length(s) of Trunk Road over which traffic is to be prohibited

_____

(v) Give full descriptions of prohibited turns (if applicable)

_____

(vi) If request is for a Prohibition of Traffic or Specified Turns (or both) state the alternative route(s)

_____

(vii) If the Traffic Order is to Prohibit or Restrict traffic (or a particular manoeuvre) please state types of vehicles, which may be excepted from the terms of the Order, e.g. Police, Fire, Ambulance, Works

_____

(viii) If request is for a Full Temporary Order please give names of suitable newspapers (indicate if daily or weekly) in which Press Notices can be published

_____

(ix) Give start and finish dates for the Traffic Order or Notice _____ to_____

(x) Any other information or instructions

_____

(xi) Please sketch below the alternative route(s) in relation to the affected section of road(s) or attach a plan

(xii) Please state the name, address and telephone number of the Operating Company official who can be contacted if any additional information is required

_____

[A copy of the made Traffic Order will be sent to this official. He/she shall also arrange for the display of Blue Notices locally and advise the Emergency Services of road closures etc authorised by a Blue Notice.]

Form completed by:

NAME IN BLOCK CAPITALS _____

Designation_____ Telephone No_____

Signature_____ Date_____

Operating Company – Roads and Traffic Order Checklist

	Checked by Area Engineer (initial & date)	Checked by Journey Time Reliability Coordinator (initial & date)
Order and Press Notice 1 Has the correct template been used 2. Is the title of the Traffic Order exactly the same as in Article 1 of the Traffic Order *Note: The **title** of the Traffic Order shall only refer to the number of the Trunk Road, e.g. "A96 Trunk Road" and shall not include any place names at the beginning or end of the road in question.* 3. Is the Traffic Order title identical to the heading of the Press Notice 4. Is the date quoted in the Traffic Order identical to the date quoted in the Press Notice 5. Is the description of the affected lengths of road in the Press Notice identical to that in the Schedule to the Traffic Order *The name(s) of Trunk Road(s) shall be quoted in the descriptions, e.g. A96 Aberdeen – Inverness Trunk Road.* 6. Does the information in the TTRO1/PTRO1/Method Statement correspond with the details in the Order and Press Notice 7. Have the alternative routes been checked to ensure they are accurate and easily understood *The numbers and names of roads shall be quoted.* 8. If certain vehicles are to be excluded from the terms of the Traffic Order, have they been mentioned in the Press Notice 9. Where a Traffic Order includes a contingency period to take account of weather or other unforeseen problems does the Press Notice also describe the anticipated duration of the work *e.g. It is anticipated that the work will be carried out over two weekends during the above period*.		

	Checked by Area Engineer (initial & date)	Checked by Journey Time Reliability Coordinator (initial & date)
Plan 10. For temporary Traffic Orders, has the plan of the alternative routes been checked for accuracy and does it correspond with the descriptions contained in the Press Notice 11. For all permanent Traffic Orders, has the plan been checked for accuracy and does it correspond with the descriptions in the Schedule to the Traffic Order 12. Are the names of roads/reference points referred to in the Schedule clearly marked on the plan In the case of Roads (Scotland) Act Orders, are the title of the plan, the plan number and the numbers allocated to the affected lengths of road consistent with the Schedule to the Traffic Order		

Template for Press Notice

THE [ ] UNIT TRUNK ROADS AREA (TEMPORARY PROHIBITIONS OF TRAFFIC, TEMPORARY PROHIBITIONS OF OVERTAKING AND TEMPORARY SPEED RESTRICTIONS) ([ ]) ORDER 200

The Scottish Ministers give notice that they propose to make the above Order temporarily prohibiting traffic, temporarily prohibiting overtaking and temporarily restricting the speed of vehicles on the lengths of road identified in the Schedule to this Notice during the periods corresponding to those lengths of road specified in the Schedule to this Notice.

The Order, which is required because work is being or is proposed to be executed on or near the lengths of road for certain purposes in relation to the lengths of road stated in the Schedule to this Notice, will be in operation from [ ] until midnight on [ ], but will only have effect in relation to such part or parts of the lengths of road as are indicated by the appropriate traffic signs and during the periods corresponding to those lengths of road specified in the Schedule to this Notice. The provisions relating to temporary prohibitions of traffic do not apply to vehicles being used in an emergency for fire brigade, ambulance, police or coastguard purposes or vehicles used for carrying out the work. There are no exemptions for those vehicles in respect of temporary prohibitions of overtaking and temporary speed restrictions unless otherwise provided by law.

Where the closure of a carriageway on a dual carriageway road is involved the alternative route for traffic will be the adjacent carriageway by means of contraflow working. Other alternative route or routes for traffic in relation to the lengths of road affected by the Order during a prohibition will be signposted. Detailed descriptions can also be obtained [ ].

Network Manager, Network Management Directorate
A member of the staff of the Scottish Ministers
Transport Scotland
Buchanan House
58 Port Dundas Road
Glasgow
G4 0HF

SCHEDULE

(a) Description of road: The following length of the [ ] Trunk Road:

1. [ ]

(b) Duration:

(c) Purpose:

(d) Alternative route or routes for traffic will be signposted.

Template For Traffic Order

Scottish Statutory Instruments

[ ] No.

ROAD TRAFFIC

The [ ] Unit Trunk Roads Area (Temporary Prohibitions of Traffic, Temporary Prohibitions of Overtaking and Temporary Speed Restrictions) (No. [ ]) Order 200

Made – – – [ ]

Coming into force – – [ ]

The Scottish Ministers, in exercise of the powers conferred by sections 14(1) and 14(4) as read with sections 2(1) and 2(2) of the Road Traffic Regulation Act 1984([1]), and of all other powers enabling them in that behalf, being satisfied that the traffic on the lengths of road specified in the Schedule to this Order should be restricted or prohibited as hereinafter provided because work is being or is proposed to be executed on or near the said lengths of road and having had regard to the existence of alternative routes suitable for the traffic which will be affected by this Order, hereby make the following Order:

Citation, commencement and cessation

1 This Order may be cited as the [ ] Unit Trunk Roads Area (Temporary Prohibitions of Traffic, Temporary Prohibitions of Overtaking and Temporary Speed Restrictions) ([ ]) Order [ ], shall come into force on [ ] and shall cease to have effect at midnight on [ ].

2. In this Order a reference to a numbered column is to the column in the Schedule to this Order bearing that number.

---

(1) 1984 c.27, section 14 was substituted by the Road Traffic (Temporary Restrictions) Act 1991 (c.26), section 1(1) and Schedule 1. Section 2 was amended by the New Roads and Street Works Act 1991 (c.22), Schedule 8, paragraph 18. The Scottish Ministers are the traffic authority by virtue of section 121A of the Road Traffic Regulation Act 1984 (inserted by the New Roads and Street Works Act 1991 (c.22), Schedule 8, paragraph 70 and amended by the Scotland Act 1998 (Consequential Modifications) Order 2001 (S.I. 2001/1400)) as read with section 151(1) of the Roads (Scotland) Act 1984 (c.54). The functions of the Secretary of State were transferred to the Scottish Ministers by section 53 of the Scotland Act 1998 (c.46).

Temporary prohibition on use of a road

3. Subject to Article 6, no person shall use, or permit the use of, any vehicle on each length of road specified in column 1 during the period corresponding to that length of road specified in column 2 when a prohibition is identified as applying to a part or parts of that length of road by means of traffic signs prescribed by the Traffic Signs Regulations and General Directions 2002([2]).

4. (1) Subject to paragraph (2) of this Article, no person shall use, or permit the use of, any vehicle in such a way that it overtakes any other moving vehicle on each length of road specified in column 1 during the period corresponding to that length of road specified in column 2 when a prohibition is identified as applying to a part or parts of that length of road by means of a traffic sign prescribed in Diagram 632 of the Traffic Signs Regulations and General Directions 2002.

(2) Nothing in paragraph (1) of this Article shall prohibit any person from using, or permitting the use of, any vehicle in such a way that it overtakes a cycle, motorcycle, tricycle or any other vehicle not being a motor vehicle in accordance with section 140 of the Road Traffic Regulation Act 1984([3]).

Temporary speed restriction

5. (1) Subject to paragraph (2) of this Article, no person shall drive any vehicle on the lengths of road specified in column 1 of Parts 2 and 3 of the Schedule to this Order during the period corresponding to that length of road specified in column 2 at a speed exceeding that specified in column 3 when a restriction is identified as applying to a part or parts of that length of road by means of a traffic sign prescribed in Diagram 670 of the Traffic Signs Regulations and General Directions 2002.

(2) When convoy working is in operation and indicated by one or more of the signs shown in Diagrams 7025, 7026, 7027, 7028 and 7029 of the Traffic Signs Regulations and General Directions 2002, no person shall drive any vehicle on the length of road specified in column 1 of Part 3 of the Schedule at a speed exceeding 10 mph when a restriction is identified as applying to a part

(2) S.I. 2002/3113.

(3) 1984 c.27, section 140 was amended by the Road Traffic (Consequential Provisions) Act 1988 (c.54), Schedule 3, paragraph 25(9).

or parts of that length of road by means of a traffic sign prescribed in Diagram 670 of the Traffic Signs Regulations and General Directions 2002.

Exemption for emergency and work vehicles

6. Nothing in Article 3 of this Order shall apply to a vehicle being used in an emergency for fire brigade, ambulance, police or coastguard purposes or a vehicle while being used for carrying out the work.

Network Manager, Network Management Directorate
A member of the Staff of the Scottish Ministers
Transport Scotland,
Buchanan House
58 Port Dundas Road
Glasgow G4 0HF

SCHEDULE

PART 1 Articles 3 and 4

1	2
Description of particular lengths of road	Duration of restriction or prohibition

PART 2 Articles 3, 4 and 5 (1)

1	2	3
Description of particular lengths of road	Duration of restriction or prohibition	Speed restriction

PART 3 Articles 3, 4, 5 (1) and (2)

1	2	3
Description of particular lengths of road	Duration of restriction or prohibition	Speed restriction

APPENDIX 1/20 – RECOVERY VEHICLES FOR BREAKDOWN

SHEET 1

1 Recovery Vehicles to be Provided

1.1 The heavy recovery vehicles provided by the Operating Company may be provided by a different recovery organisation to the light recovery vehicles, motorcycle recovery facilities and impact protection vehicles.

1.2 The Operating Company shall provide the number of heavy recovery vehicles, light recovery vehicles, motorcycle recovery facilities and impact protection vehicles required to achieve the response times for recovery of vehicles as set out in Appendix 32/1 for the Vehicle Recovery Service. Heavy recovery vehicles shall not be provided for Service Delivery Period 2.

1.3 Subject to an Order by the Overseeing Organisation the Operating Company shall provide the number of heavy recovery vehicles, light recovery vehicles, motorcycle recovery facilities and Impact Protection Vehicles for Works within the Unit.

2 Locations for Recovery Vehicles

2.1 When not engaged in recovery Operations the recovery vehicles shall be positioned at locations such that they can meet the response times set out in Appendix 32/1.

2.2 Subject to an Order by the Overseeing Organisation the Operating Company shall position recovery vehicles at locations stated in the Order.

3 Limits of Service

3.1 The Vehicle Recovery Service Operations required for the Forth Road Bridge during Service Delivery Period 1 shall be the A90 between Echline Junction and Ferrytoll Junction.

3.2 The Vehicle Recovery Service Operations required for Service Delivery Period 2 for the Forth Road Bridge will be the A90 between Echline Junction and Ferrytoll Junction and for the Queensferry Crossing the M90 between Queensferry Junction and Ferrytoll Junction.

3.3 Subject to an Order by the Overseeing Organisation the limits of the vehicle recovery Operations for Works at other locations within the Unit will be as stated in the Order.

4 Locations for Vehicle Removal

4.1 The Operating Company shall carry out a risk assessment of possible locations on the hardshoulder or hardstrip adjacent to an operational emergency telephone, or off the Trunk Road at an interchange and shall obtain the written consent of the Overseeing Organisation to these locations not less than 14 days before the commencement of vehicle recovery provision.

4.2 Any broken down or accident damaged vehicles on the operating carriageway within the limits of the vehicle recovery Operations shall be moved immediately to a pre-identified location consented to by the Overseeing Organisation.

5 Records

5.1 The Operating Company shall complete record sheets as referred to in Cl 120.26 in the format shown in Sheets 2 to 4 of this Appendix 1/20.

SHEET 2 – Information to be provided by the Operating Company

Form For 'Recovery Vehicle Daily Check Sheet'

RECOVERY VEHICLE DAILY CHECK SHEET							
				Week Commencing:			
Driver's Name:		Vehicle Type/Registration No:			Mileage:		
Driver to initial against check list below:							
	Monday	Tuesday	Wednesday	Thursday	Friday	Saturday	Sunday
OIL LEVEL							
WATER							
ENGINE							
CLEANLINESS – interior							
CLEANLINESS – exterior							
WIPER/WASHERS							
TYRES							
LIGHTS							
Driver's Report (detail any problems): Action Taken (to solve above problems):							
Date:			Supervisor's Signature:				
COMPLETED SHEET TO BE RETURNED TO OVERSEEING ORGANISATION EACH WEEK							

SHEET 3 – Information to be provided by the Operating Company

LEAFLET FOR ISSUE BY RECOVERY VEHICLE OPERATIVES TO DRIVERS OF ALL BROKEN–DOWN OR ACCIDENT DAMAGED MOTOR VEHICLES

Name of Scheme:

[Operating Company: Insert Forth Bridges Unit or accurate name of the Scheme]

.....……

Vehicle Recovery Service – Explanatory Leaflet authorised by the Scottish Government for issue to drivers of broken-down and accident-damaged motor vehicles within the above Unit or work.

Leaflet to be distributed by recovery vehicle operatives of the appointed recovery firm on behalf of the Scottish Government.

1. The roadworks commence at the "Roadworks Ahead – 2 miles" sign and end at the "Roadwork End" sign*. [Operating Company: See Note 1 below]*
2. The recovery service provided over the length of both the Forth Road Bridge and Queensferry Crossing or along the extent of the roadworks is free.
3. Vehicles will be recovered clear of the Forth Road Bridge, Queensferry Crossing or the roadworks to ……unless otherwise directed by the police. *[Operating Company: See Note 2 below]*
4. It will then be at the discretion of individual drivers of broken-down or accident-damaged vehicles requiring assistance to arrange for assistance or the removal of their vehicle to a garage of their choice. The operators of the free recovery service do not make such arrangements.

Useful contact numbers are given below:

Local Garage……

AA……...

RAC……

Greenflag……...

Assistance will also be given by telephoning …….. *[compiler: See Note 3 below]*

If a motorway emergency telephone is used, the police will assist.

Notes to compiler:

(1) If different, replace with the appropriate limits of service for the Works(2) The chosen location should take into account safety, security and the availability of a telephone, see IAN 65/05.

(3) The telephone number should be agreed with the police prior to the commencement of the Contract or the Works.]

SHEET 4 (1 of 2) – Information to be provided by the Operating Company

LAYOUT FOR 'VEHICLE RECOVERY LOGSHEET'

VEHICLE RECOVERY LOGSHEET (1 of 2) [Scheme name]	Recovery vehicle: ……	Week Ending: ……	Sheet No: ……

Date	Time			Where	Dir	Lanes Closed					Police etc Present*	Incident		Recovery	Vehicle Type#	Q'ing	Weather	Road Surface		Remarks
	Call Out	Arrival at Scene	Road Clear	Marker Post No.		HS	1	2	3	4		Acc	B/d	Tow** Y/N		Y/N		Dry	Wet	

*P – Police
F – Fire Service
A – Ambulance

**Y – Tow/Lift
R – Restart
F – False Call

#C – Car
V – Van
HGV – Heavy Goods Vehicle

M/C – Motorcycle

SHEET 4 (2 of 2)

VEHICLE RECOVERY LOGSHEET (2 of 2) [Scheme name]			Recovery Vehicle: …….	Week Ending: …../……./……..		Sheet No: …….
Date & Time	Type of Vehicle	Registration No.	Name & Address of driver or organisation	Location of Breakdown	Nature of Breakdown	Recovery Operator's Name

APPENDIX 1/75 – OPERATING COMPANY'S VEHICLE LIVERIES

1 LOGO REQUIREMENTS

1.1 Transport Scotland Logo

The Transport Scotland logo is Transport Scotland's official brand and is aimed at customers so they can recognise and access its services as well as identify accountability and credit for these services.

The logo consists of two elements: the first is a graphical representation of a road and railway line, and the second is the text "TRANSPORT SCOTLAND" using the typeface Gill Sans.

The main elements to Transport Scotland's logo and branding requirements are detailed in the *Transport Scotland Identity Guidelines.*

2 LIVERY REQUIREMENTS

2.1 General

This livery is to be applied to all Operating Company fleet vehicles used for operational duties on the Unit.

The *Transport Scotland Identity Guidelines* addresses the issues of branding and style for a selection of different vehicle types. The Operating Company shall ensure that individual vehicles comply with the requirements for vehicle base colour, safety markings and conspicuity requirements in this Contract, the relevant national guidelines and Legislation.

Seven general vehicle classes have been selected as the basis for illustrating the vehicle livery scheme to be applied. These are:

(i) estate car,

(ii) gritter,

(iii) Trunk Road Incident Support Service van,

(iv) small car,

(v) van,

(vi) mini-van, and

(vii) goods vehicle.

These vehicle types have been selected to provide a spread of livery options that can be readily adapted to cover the majority of vehicle body types that may be employed by the Operating Company during the course of Operations.

Should the Operating Company wish vehicles to have a fleet number present then it shall be small and inconspicuous, and placed in an area outwith that of the specified livery scheme markings.

Where this livery scheme has identified the need for chevrons these shall meet the road visibility requirements laid out in Chapter 8 of the *Traffic Signs Manual*, published by the Government's Department for Transport. These chevrons shall conform to the latest industry standards and Legislation and be made from industry recognised vinyls and materials.

If the Operating Company is unable to apply a livery scheme to a vehicle type without a significant departure from the prescribed scheme, the Operating Company shall submit an alternative proposal to the Director for approval.

2.2 Vehicle Markings

The type and style of permitted Transport Scotland markings to be used on Operating Company vehicles is detailed in the *Transport Scotland Identity Guidelines*. All markings are available as graphics files from the Director in an "eps" or "jpeg" format.

The aspect ratio must be preserved when re-sizing the Transport Scotland marking to suit different vehicles.

Should a departure from the prescribed scheme be required the Operating Company shall submit an alternative proposal to the Director for consent.

Care shall be taken when placing markings to avoid any vehicle features such as door slides, handles and non-body coloured trim that would conflict with the clarity of the marking.

APPENDIX 1/76 – ISU AND TRISS OPERATIVES' UNIFORMS

Incident Support Unit and Trunk Road Incident Support Service operatives shall be suitably attired with appropriate uniform style clothing and personal protection equipment.

Uniforms and personal protection equipment shall be appropriately badged.

APPENDIX 1/77 – SPECIFICATION FOR TRISS VEHICLE MOBILE CCTV SYSTEM

1 The Trunk Road Incident Support Service (TRISS) vehicles shall be equipped with a small and rugged pan tilt zoom (PTZ) camera, as described below, mounted on a pneumatic mast which can be raised and lowered from the vehicle via a remote control device located in the vehicle. The pneumatic mast shall be extendable to a height of approximately 6 metres above vehicle floor level and shall retract so that the camera height above the vehicle roof is minimal.

2 A 6.8" LCD/TFT Colour monitor shall be provided within the vehicle cab to provide an onsite confirmation of camera operation.

3 The camera shall connect to an encoder unit with a minimum of 4 video feeds which enables onward transmission of the video signal to the Traffic Scotland National Control Centre and resilience rooms, Events control rooms, silver command centres and police control rooms. The Traffic Scotland National Control Centre operators will be able to control the camera pan and tilt functions without assistance from the TRISS operatives.

4 The system shall allow multiple users viewing access.

5 The Operating Company may view the images at their depot with the written approval of the Director.

6 The transmitted image must be able to be displayed on the Traffic Scotland MOSAIC System. The images sent to the Traffic Scotland National Control Centre shall be able to be recorded at high resolution onto a plug in hard drive, to allow historical viewing of footage at full resolution and at a rate of 5 images a second when the vehicle returns to base.

7 The host server will be the server provided by the Traffic Scotland Operations and Infrastructure Service Contractor, which is compatible with the Traffic Scotland MOSAIC System. The Operating Company's chosen equipment shall be compatible with this server. Subject to the Director's consent, the Operating Company may provide its own host server, which is compatible with its chosen equipment, and which shall be integrated with the Traffic Scotland MOSAIC system.

8 The vehicle mounted pan, tilt and zoom (PTZ) camera shall have the following features:

(a) 1/3" colour/monochrome, charge coupled device (CCD), high resolution, 480 television lines (TVL),

(b) High Resolution – 4CIF Display Capability, 2CIF for Transmission,

(c) provide good quality Images in all weather conditions,

(d) built-in optical auto zoom lens - magnification of 18:1,

(e) be waterproof with a lens wiper,

(f) be vandal resistant, and

(g) be operable remotely by Traffic Scotland National Control Centre staff only.

APPENDIX 1/78 – SPECIFICATION FOR VEHICLE MOUNTED VARIABLE MESSAGE SIGNS

The vehicle roof mounted variable message signs shall:

(a) have a power lift system and be suitable for the vehicle,

(b) display legible messages under all conditions,

(c) automatically detect and correct errors and faults,

(d) be of robust, weather resistant construction with excellent rust and corrosion protection,

(e) be easy to maintain and repair,

(f) be capable of being deployed and operating while vehicle travels at low speed,

(g) be battery powered and charged from the vehicle system with status display,

(h) have a spare battery, and

(i) work while the vehicle engine is off.

The message panel shall have:

(a) a panel size approximately 2m wide x 1.2m,

(b) a matrix size approximately 27 x 48 pixels,

(c) a pixel size approximately 33mm x 30mm,

(d) a minimum of 12 characters per line,

(e) a minimum of 3 lines,

(f) a minimum of 6 available fonts,

(g) full matrix graphics capability, and

(h) LED display technology.

The message panel control consol shall have:

(a) ultra low powered solid state console circuitry,

(b) a waterproof, backlit, alphanumeric console keyboard,

(c) a LCD 8 line x 40 character with graphics back lit console display,

(d) proprietary, field upgradeable programming software,

(e) pre-programmed and user programmed minimum 50 message capacity,

(f) minimum 2 messages each sequence capacity,

(g) real time clock and calendar time and date control,

(h) user-selectable (0.1 to 60 seconds) message display time,

(i) instantaneous display update time,

(j) separate backup battery non-volatile memory,

(k) user selectable, multi level password protection, and

(l) easy to use menus for operator interface.

APPENDIX 2/3 – RETENTION OF MATERIAL ARISING FROM SITE CLEARANCE

The Table below shall be completed for an individual Order when required.

Description of material	Location	Delivered to	Requirements

Equipment which is not to be immediately re-erected shall be transported to a Depot and stored.

The equipment shall remain the property of the Scottish Ministers.

APPENDIX 3/1 – FENCES GATES AND STILES

1 Fencing for the protection of planted areas shall be hexagonal wire netting fencing complying with BS 1722-2 Section 8 and in accordance with Highway Construction Details (HCD) Drawing Number H39 Fencing Type 1.

2 Where required, wire mesh shall be attached to permanent or existing fencing in accordance with HCD Drawing Numbers H46 or H47.

3 Mammal proof fencing shall as a minimum:

(a) Badgers,

(b) Otters, and

(c) rabbits.

4 Any defective and damaged parts of any existing or temporary mammal proof fencing shall be immediately repaired by the Operating Company. The specification for the repair or replacement of mammal proof fencing shall be as follows:

Badger fencing shall be in accordance with the following specification:

Post and mesh fences in accordance with British Standard 1722 part 2: 1989 *Specification for rectangular wire mesh and hexagonal wire netting fences* with a rectangular steel wire mesh having maximum openings of 25 millimetres X 50 millimetres and wires of not less than 3 millimetres diameter in accordance with British Standard 4102: 1990 “Specification for steel wire and wire products for fences” and galvanised to British Standard BS 729: 1971 (1994) *A specification for hot dip galvanised coatings for iron and steel articles*. The mesh shall be securely stapled to the posts and (where present) rails of the highway boundary fences installed along the scheme roads. Where the highway boundary fence is post and wire, stobs shall be spaced no more than 1.8 metres apart. The mesh shall extend a minimum of 1.0 metre above ground level and be buried vertically to between 300 millimetres and 500 millimetres below ground and turned at right angles from the bottom of the buried section towards the direction from which badgers are expected to approach for a further 300 millimetres. The return shall consist of a separate roll of mesh attached with clips to the bottom of the vertical mesh. The vertical mesh shall be secured at ground level by a galvanised wire not less than 5 millimetres in diameter. The fencing shall also include a wire mesh overhang of at least 300 millimetres at the top of the fence positioned in the direction from which badgers are expected to approach and should protrude at an angle of between 45 degrees and 90 degrees. Fixings for attachment to Structures shall use a resin fixed replaceable bolt system.

Badger Gates shall be constructed in accordance with the RSPCA publication *Problems with Badgers* All badger gates shall incorporate concrete sills to prevent digging or erosion.

Otter Fencing shall be in accordance with the following specification:

Post and mesh fences in accordance with British Standard 1722 part 2: 1989 *Specification for rectangular wire mesh and hexagonal wire netting fences* with a rectangular steel wire mesh having maximum openings of 50 millimetres X 100 millimetres and wires of not less than 3 millimetres diameter in accordance with British Standard 4102: 1990 *Specification for steel wire and wire products for fences*

and galvanised to British Standard 729: 1971 (1994) *A specification for hot dip galvanised coatings for iron and steel articles*. The mesh shall be securely stapled to the posts and (where present) rails of the highway boundary fences installed along the scheme roads. Where the highway boundary fence is post and wire, stobs shall be spaced no more than 1.8 metres apart. The mesh shall extend a minimum of 1.2 metres above ground level and be buried vertically to a depth of between 250 and 350 millimetres and turned at right angles from the bottom of the buried section towards the direction from which otters are expected to approach for a further 250 to 350 millimetres. In areas of uneven ground or soft soil, the buried section of the fence should extend to a depth of 500 millimetres and include a horizontal return of 500 millimetres. The return shall consist of a separate roll of mesh attached with clips to the bottom of the vertical mesh. The fencing shall also include a wire mesh overhang of at least 300 millimetres at the top of the fence positioned in the direction from which otters are expected to approach and should protrude at an angle of between 45 degrees and 90 degrees. The vertical mesh shall be secured at ground level by a galvanised wire not less than 5 millimetres in diameter and a galvanised barbed wire shall be securely stapled to the posts of the fence 25 millimetres above the top of the mesh. Fixings for attachment to Structures shall use a resin fixed replaceable bolt system.

A higher specification fencing featuring taller fence netting (1450 millimetres) as recommended in DMRB Otter Revised Advice Note HA 81/99 should be used where otter activity is higher and there is an increased likelihood of fence breaches and road traffic accidents, around culverts, underpasses and watercourses.

Where there is a requirement for combined badger and otter fencing, the fence shall be built to the height specifications of the otter fencing but shall have the smaller rectangular steel mesh specified for the badger fencing.

5 Should there be a need to install additional bat bridges then they shall be in accordance with the following specification:

The bat bridge shall be composed of six stainless steel wire cables, with a minimum diameter of six millimetres, suspended over the carriageway between two timber poles. The cables shall be arranged in three rows over the carriageway, with each row separated vertically by 1000 millimetres. The top row of cables shall be separated horizontally by 900 millimetres, the middle row of cables by 1450 millimetres and the bottom row of cables horizontally by 2000 millimetres to create a triangular bridge profile. Two timber poles supporting the steel cables shall be provided, 2000 millimetres apart, on each side of the road beyond the verge. The timber poles shall include anti-climbing measures. Each timber pole shall be set in concrete and anchored using six stainless steel wire cables with a minimum diameter of 12 millimetres. Anchor cables for the timber poles shall be set into concrete anchor blocks. The minimum height above the carriageway of the cables, including sag, shall be higher than the maintained headroom of the route. Plastic spheres, with a minimum diameter of 200 millimetres, shall be located approximately 2000 millimetres apart horizontally on each cable. These will be offset on each row vertically by 700 millimetres. Planting shall be provided around the base of the timber poles and around anchor cables as shown on the Indicative Landscape Design drawings as listed in Appendix 0/4 to the Specification.

APPENDIX 4/1 – ROAD RESTRAINT SYSTEMS (VEHICLE AND PEDESTRIAN)

1 Location

1.1 Vehicle Restraint Systems

1.1.1 The location, Containment Level, Impact Severity Level (ISL), Working Width Class, maximum height that allows the required visibility, and the Length of Need requirements for safety barriers and transitions shall be determined by the Operating Company in accordance with this Contract.

1.1.2 The location, Containment Level, Impact Severity Level (ISL) and Working Width Class requirements for vehicle parapets shall be determined by the Operating Company in accordance with this Contract.

1.1.3 The location, Performance Class, Impact Severity Level (ISL), Permanent Lateral Displacement Zone (PLDZ) Characteristic, Exit Box Class (D), and maximum height that allows the required visibility requirements for terminals shall be determined by the Operating Company in accordance with this Contract.

1.1.4 The location, Performance Level, confirmation of whether a redirective (R) or non-redirective (NR) type of crash cushion, Impact Severity Level (ISL), Redirection Zone Class (Z), Permanent Lateral Displacement Zone Class (D) and maximum height that allows the required visibility requirements for crash cushions shall be determined by the Operating Company in accordance with this Contract.

1.2 Vehicle Restraint Systems

1.2.1 Where Annual Average Daily Traffic (AADT) exceeds 25,000 vehicles/day, or it is estimated that this level of traffic will be reached on the relevant part of the Trunk Road within 20 years, the Operating Company shall so inform the Overseeing Organisation in writing. The Overseeing Organisation will inform the Operating Company if concrete safety barrier complying with clause 401.2 is required in the relevant location, and if it is required the Operating Company shall provide such, subject to an Order.

1.3 Pedestrian Restraint Systems

1.3.1 The location for pedestrian parapets and pedestrian guardrails shall be determined by the Operating Company in accordance with this Contract.

1.4 Anti-glare Screens

1.4.1 The location for anti-glare screens shall be determined by the Operating Company in accordance with this Contract.

2. Other Details

2.1 Safety Barriers, Terminals, Transitions and Crash Cushions

2.1.1 Any special requirements shall be determined by the Operating Company in accordance with this Contract.

2.1.2 Specific connection requirements to existing safety barriers, vehicle parapets or other structures shall be determined by the Operating Company in accordance with this Contract.

2.2 Vehicle Parapets Including Anchorages and Attachment Systems

2.2.1 Any special requirements including any aesthetic requirements shall be determined by the Operating Company in accordance with this Contract.

2.3 Pedestrian Restraint Systems

2.3.1 Any special requirements shall be determined by the Operating Company in accordance with this Contract.

2.4 Temporary Safety Barriers

2.4.1 When necessary to ensure the safety of the users of the Unit pending permanent repair of a Defect, temporary safety barriers shall be installed in accordance with TD 19/06 and the manufacturers' latest instructions and drawings.

The Operating Company shall have immediate access to at least 90 metres of temporary safety barrier and the necessary plant and qualified personnel to commence erection of the barrier as soon as practicable but within 24 hours of the need for the barrier being known to the Operating Company.

Records of temporary safety barrier use including risk assessments shall be held within the Management System.

Schedule of Road Restraint Systems (Vehicle and Pedestrian)

[To be completed by the Operating Company]

Location & Start Chainage * (m)	Finish Chainage (m)	Position on Cross-Section +	Type of Road Restraint System** (Safety barriers, vehicle parapets, transitions, terminals, crash cushions, pedestrian parapets, pedestrian guardrails)	Set-back (m)	Containment Level** (Safety barriers, vehicle parapets, transitions) Performance Class (P)** (Terminals)	Impact Severity Level (ISL) ** (Safety barriers, vehicle parapets, transitions, terminals, crash cushions)	Working Width Class** (Safety barriers, vehicle parapets, transitions)	Performance Level and whether Redirective (R) or Non-redirective (NR) (Crash Cushions)	Permanent Lateral Displace-ment Zone (PLDZ) Characteristic**(Terminals) Permanent lateral Displacement Zone Class (D) Crash Cushions)	Exit Box Class** (Terminals) Redirection Zone Class (Z) (Crash Cushions)	Other Requirements/ Comments ** ++ +++

NOTES:* e.g. Road name, verge, central reserve, slip road etc. ** Enter temporary safety barrier where required.

+ e.g. LH verge, central reserve, RH hand verge etc. ++ Height requirements etc. +++ Anti-glare Screens

APPENDIX 4/2 – INFORMATION REQUIRED TO DEMONSTRATE COMPLIANCE OF ROAD RESTRAINT SYSTEMS TO BS EN 1317-1, BS EN 1317-2, BS EN 1317-3 AND DD ENV 1317-4:2002

The Operating Company shall submit the following supporting information demonstrating compliance with British Standard EN 1317-1, British Standard EN 1317-2, British Standard EN 1317-3 and DD ENV 1317-4:2002 to the Overseeing Organisation for acceptance:

EUROPEAN COMMITTEE FOR STANDARDISATION (CEN) COMPLIANCE [1]

Initial submission documents to be supplied for consideration of initial type test shall be as follows:

1 Test report in accordance with British Standard EN 1317-1, clause 9 (and including any additional test data required under British Standard EN 1317-3, clauses 7.3 and 7.4 and DD ENV 1317-4:2002, clauses 7.3 and 7.4).

2 Video/high speed film of test annotated showing date, test number and performance class.

3 Still photographs of complete installation including anchorage points.

4 Still photographs of vehicle before and after impact.

5 Full drawings of tested items.

6 Certification from the manufacturer that the item tested complies with drawings supplied.

7 Certificate from test house accredited in accordance with the requirements of Series 400 (MCHW 1.400).

Additional information which will be required on acceptance of initial type test prior to installation:

8 Manufacturer's specification.

9 Installation drawings.

10 Manufacturer's installation instructions including foundation requirements and test methods to verify their performance.

11 Manufacturer's repair and maintenance manual.

12 Certificate of compliance with the Quality Management Scheme 1 for the Manufacture of Fencing Components.

13 Compliance with the Quality Management Sector Scheme 2 – Supply and Installation of Fences:

(i) Sector Scheme 2B for Vehicle Restraint Systems.

14 Certificate of compliance for the Quality Management Sector Scheme 5 for the Fabrication and Installation of Bridge Parapets and Cradle Anchorages.

(i) Sector Scheme 5A for The Manufacture of Parapets for Road Restraint Systems.

(ii) Sector Scheme 5B for The Installation of Parapets for Road Restraint Systems.

15 Nominal loads (direct forces, moments and co-existent shears) to be transferred from the parapet to the structure or foundation.

Notes:

1 All documents, which are not in English, shall have an English translation.

If they are in a language other than French or German the promoter will be required to supply a full translation.

2 Items 12 and 13 are required for safety barrier systems and transitions.

3 Items 14 and 15 are required for vehicle parapets.

Sheet 1 of 4

SUBMISSION FOR COMPLIANCE WITH BS EN 1317-1, BS EN 1317-2, BS EN 1317-3 and DD ENV 1317-4:2002
TYPE OF VEHICLE RESTRAINT SYSTEM:
CONTAINMENT PERFORMANCE CLASS/PERFORMANCE LEVEL/PERFORMANCE CLASS (*):
TEST REPORT NUMBER: (Test of)
Test Type: (Primary/Complementary Test) (*)
TEST NUMBER: TEST DATE: (*) delete as appropriate

COMPANY NAME: CONTACT: ADDRESS: Tel:/Fax:/E-mail: PRODUCT NAME:	

Initial submission documents to be supplied for consideration of Initial Type Test (ITT).

Item		Comment	Item Received (Y or N)	Date requested
1	Test report	In accordance with BS EN 1317-1, clause 9 (and including any additional test data required under BS EN 1317-3, clauses 7.3 and 7.4 and DD ENV 1317-4:2002, clauses 7.3 and 7.4).		
2	Video/high speed film	Of test coverage as specified in relevant part of BS EN 1317 or DD ENV 1317-4:2002. Annotated showing date, test number and performance class.		
3	Still photographs	Of complete installation including anchorage points.		
4	Still photographs	Of vehicle before and after impact.		
5	Drawings	Fully detailed drawings of tested item.		
6	Certification from the manufacturer	Confirming that the item tested complies with drawings supplied.		
7	Confirmation from test house	That the test conforms to the relevant requirements of BS EN 1317-1 (and including and additional test data required under BS EN 1317-2, BS EN 1317-3 and DD ENV 1317-4:2002).		
Additional information, which will be required on acceptance of initial type test prior to installation.				
8	System specification	Manufacturer's specification.		
9	Installation details	Manufacturer's drawings.		
10	Installation procedures	Manufacturer's installation instructions		
11	Maintenance Manual	Manufacturer's inspection, repair, and maintenance instructions.		
12	Certificate of compliance	With the Quality Management Scheme 1 for Manufacture of Fencing Components. [2]		
13	Certificate of compliance	With the Quality Management Sector Scheme 2B for the Supply and Installation of Vehicle Restraint Systems. [2]		
14	Certificate of compliance	With the Quality Management Sector Schemes 5A and 5B for the Manufacture and Installation of Bridge Parapets and Cradle Anchorages. [3] (i)Sector Scheme 5A for The Manufacture of Parapets for Road Restraint Systems, and (ii)Sector Scheme 5B for The Installation of Parapets for Road Restraint Systems.		
15	Support loads	Nominal loads (direct loads, bending moments and shear forces) that have to be transferred from the vehicle restraint system to the supporting structure or foundation. [3]		

Notes:

1. All documents, which are not in English, will have to be translated. If they are in a language other than French or German the promoter will be required to supply a full translation.
2. Items 12 and 13 are required for safety barrier systems and transitions.
3. Items 14 and 15 are required for vehicle parapets. See also Note 1 under Sector Scheme B in Appendix A of the Specification for Highway Works.

Signature:	Name:
Date:	

Sheet 2 of 4

SUBMISSION FOR COMPLIANCE WITH BS EN 1317-1, BS EN 1317-2, and DD ENV 1317-4:2002
TYPE OF VEHICLE RESTRAINT SYSTEM: Safety Barrier, Vehicle Parapet or Transition (*)
CONTAINMENT PERFORMANCE CLASS/LEVEL(*)
TEST REPORT NUMBER: (Test of)
Test Type: (Primary/Complementary Test) (*)
TEST NUMBER: TEST DATE: (*) delete as appropriate

COMPANY NAME: CONTACT: ADDRESS: Tel:/Fax:/E-mail: PRODUCT NAME:	

			Specified	Actual	Satisfactory (Yes or No)	Compliance
BS EN 1317-1, Table 1	Vehicle Details	Impact Condition(s) Total vehicle mass (kg) Speed (km/h) Angle (degrees)	 .....(+) ……(0,+7%) ……(-1,+1.5)			
		Centre of Gravity Vertical height (m) Longitudinal (m) Lateral (m)	 .....(± 10%) ……(± 10%) ± …….			
		Model				N/A
BS EN 1317-2, Clause 4.2	Vehicle Restraint System (VRS) Behaviour	1)The VRS shall contain and redirect the vehicle without breakage of principal longitudinal elements of the system. 2)No major part of the VRS shall become totally detached or present an undue hazard to other traffic, pedestrians or personnel in a work zone. 3)Elements of the VRS shall not penetrate the passenger compartment of the vehicle. Deformations of, or intrusions into the passenger compartment that can cause serious injuries are not permitted. 4)Ground anchorages and fixings shall perform according to the design of the VRS.				
BS EN 1317-2, Clause 4.3	Vehicle Behaviour	1)The centre of gravity (CG) of the vehicle shall not cross the centreline of the deformed system. 2)The vehicle shall remain upright during and after impact, although moderate rolling, pitching and yawing are acceptable. 3)The vehicle shall leave the VRS after impact, so that the wheel track does not cross a line parallel to the initial traffic face of the VRS, at a distance A (2.2m) plus vehicle width + 16% of the length of the vehicle within a distance B (10m) from the final intersection (break) of wheel track with the initial traffic face of the VRS.				
BS EN 1317-2, Clause 5.3.2	Installation	1)The length of the VRS shall be sufficient to demonstrate the full performance characteristics of the system. 2)If the VRS has to develop tension, end anchorages shall be provided in accordance with the VRS specification. Post foundation shall meet the design specification.				
BS EN 1317-2, Clause 4.4.	Severity Indices	SPECIFIED THIV Limit 33 km/h Limit 33 km/h PHD Limit 20 g ASI Limit 1.4 Limit 1.4	ACTUAL THIV….. km/h km/h PHD….. g g ASI….. .			
BS EN 1317-2, Clause 5.7, Figure 3	Photographic coverage	1)Photographic coverage shall be sufficient to clearly describe behaviour and vehicle motion during and after impact. 2)High speed cameras shall be operated at a minimum of 200 frames per second and stills. 3)As recommended in clause 5.7 and Figure 3.				
	Drawings	Drawings included			N/A = Not Applicable	

FULLY COMPLIES WITH STANDARD: BS EN 1317-1, BS EN 1317-2, DD ENV 1317-4:2002	
Signature:	Name:
Date:	

Sheet 3 of 4

SUBMISSION FOR COMPLIANCE WITH BS EN 1317-1 and BS EN 1317-3
TYPE OF VEHICLE RESTRAINT SYSTEM: Crash Cushion (Redirective [R] or Non-redirective [NR](*)
TEST REPORT NUMBER: TEST TYPE: (Primary/Complementary Test) (*)
PERFORMANCE LEVEL: VELOCITY CLASS: (Test of)
TEST NUMBER: TEST DATE: (*) delete as appropriate

COMPANY NAME: CONTACT: ADDRESS: Tel:/Fax:/E-mail: PRODUCT NAME:	

			Specified	Actual	Satisfactory (Yes or No)	Compliance
BS EN 1317-1	Vehicle Details	Impact Condition(s) Total vehicle mass (kg) Speed (km/h) Angle (degrees)	 .....(+ …) ……(0,+7%) ……(-1,+1.5)			
		Centre of Gravity Vertical height (m) Longitudinal (m) Lateral (m)	 .....(± 10%) ……(± 10%) ±…….			
		Model				N/A
BS EN 1317-3, Clause 6.2	Crash Cushion Behaviour	1)Elements of the crash cushion shall not penetrate the passenger compartment of the vehicle. Deformations of, or intrusions into, the passenger compartment that could cause serious injuries are not permitted. 2)No major element of the crash cushion, having a solid mass greater than or equal to 2.0 kg, shall become totally detached, unless this is required by the working of the crash cushion. No major element of the crash cushion shall impede the path of adjacent traffic. The final position of the detached element shall be considered to determine the displacement classification.				
BS EN 1317-3, Clause 6.3	Vehicle Behaviour	1)The vehicle shall remain upright during and after the collision although yawing and moderate rolling and pitching are acceptable. The post-impact trajectory of the test vehicle shall be controlled by means of the exit box shown in Figure 2 and specified as detailed in Tables 11 and 12.				
BS EN 1317-3, Clause 7.3.2	Installation	1)The installation of the crash cushion for the test shall comply with the structural design details and the on-road system details as given in the design specification.				
BS EN 1317-3, Clause 5.4. and Table 4	Impact Severity Levels	SPECIFIED Level A:THIV ≤ 44km/h (Tests 1, 2 & 3) THIV≤ 33km/h (Tests 4 & 5) ASI≤ 1.0 Level B:THIV≤ 44km/h (Tests 1, 2 & 3) HIV ≤ 33km/h (Tests 4 & 5) ASI≤ 1.4 Levels A & B: PHD ≤ 20g	ACTUAL			
BS EN 1317-3, Clause 7.7 Figure 4	Photographic coverage	1)High speed cameras and/or high speed video cameras shall be operated at minimum of 200 frames per second. 2)Stills 3)As recommended in clause 7.7 and Figure 4.				
	Drawings	Drawings included				
					N/A = Not Applicable	

FULLY COMPLIES WITH STANDARD: BS EN 1317-1 and BS EN 1317-3	
Signature:	Name:
Date:	

Sheet 4 of 4

SUBMISSION FOR COMPLIANCE WITH BS EN 1317-1 and DD ENV 1317-4:2002
TYPE OF VEHICLE RESTRAINT SYSTEM: Terminal
PERFORMANCE CLASS: (Test of)
Test Type: (Primary/Complementary Test) (*)
TEST TYPE NUMBER:
TEST NUMBER: TEST DATE: (*) delete as appropriate

COMPANY NAME:
CONTACT:
ADDRESS:
Tel:/Fax:/E-mail:
PRODUCT NAME:

			Specified	Actual	Satisfactory (Yes or No)	Compliance
BS EN 1317-1, Table 1, DD ENV 1317-4:2002, Clauses 7.4 & 7.5	Vehicle Details	Impact Condition(s) Total vehicle mass (kg) Speed (km/h) Angle (degrees)	 .....(± …) ……(0,+7%) ……(-1,+1.5)			
		Centre of Gravity Vertical height (m) Longitudinal (m) Lateral (m)	.....(± 10%) ……(± 10%) ± …….			
		Model				N/A
DD ENV 1317-4:2002, Clauses 5.4 &5.5.2	Terminal Behaviour	1)Elements of the terminal shall not penetrate the passenger compartment of the vehicle. Deformations of, or intrusions into, the passenger compartment that could cause serious injuries are not permitted. 2)No major part of the terminal shall become totally detached and come to rest outside the permanent lateral displacement zones defined in clause 5.4. 3)Anchorages and fixings shall perform to the terminal design specifications and other specified requirements as listed in the test report.				
BS EN 1317-4,:2002 Clause 5.5.3	Vehicle Behaviour	1)The vehicle shall not overturn, although rolling, yawing and moderate pitching may be accepted. For the Performance Class P1 rolling onto a side may be accepted. 2)The exit box values for the specified test are as defined in Figures 5.6 and 7 (as appropriate).				
DD ENV 1317-4:2002, Clause 7.3.2	Installation	1)The terminal shall conform to the structural design details and with the system installation details as given in the design specification of the manufacturer.				
BS EN 1317-4:2002, Clause 5.5.4 & Table 5	Impact Severity Levels	SPECIFIED Level A: THIV ≤44km/h (Tests 1,2 &3) THIV ≤33km/h (Tests 4 &5) ASI ≤ 1.0 Level B: THIV ≤ 44km/h (Tests 1,2&3) THIV≤ 33km/h (Tests 4 & 5) ASI ≤ 1.4 Levels A & B: PHD≤ 20g		ACTUAL		
DD ENV 1317-4:2002, Clause 7.7. & Figure 7	Photographic coverage	1)Photographic coverage shall be sufficient to describe clearly terminal and vehicle motion during and after impact. 2)High speed cameras and/or high speed video cameras at a minimum of 200 frames per second. 3)Stills				
	Drawings	Drawings included				
					N/A = Not Applicable	

FULLY COMPLIES WITH STANDARD: BS EN 1317-1 and DD ENV 1317-4:2002

Signature: Name:

Date:

APPENDIX 5/1 – DRAINAGE REQUIREMENTS

1 **The Design for new drainage systems shall be in accordance with other provisions of this Contract.**

The permitted alternative pipe/trench options for carrier drains shall be as given below:

Permitted Alternative Pipe/Bedding Combinations												
Pipe Diameter (mm)	Pipe Group No.	Vitrified Clay					Pre-cast Concrete			Ductile Iron	GRP	Thermoplastic (Structured Wall)
		L	95	120	160	200	Class L	Class M	Class H			
100	1				ASBFN	ASBFN				S	S	ST
100	2				ASBFN	ASBFN				S	S	ST
100	3				ASBFN	ASBFN				S	S	ST
100	4				ASBFN	ASBFN				S	S	ST
100	5				ASBFN	ASBFN				S	S	ST
100	6				ASBFN	ASBFN				S	S	ST
100	17				Z	Z				Z	Z	Z
150	1				ASBFN	ASBFN	ASBFN	ASBFN		S	S	ST
150	2				ASBFN	ASBFN	ASBFN	ASBFN		S	S	ST
150	3				ASBFN	ASBFN	ASBFN	ASBFN		S	S	ST
150	4				ASBFN	ASBFN	ASBFN	ASBFN		S	S	ST
150	5				ASBFN	ASBFN	ASBF	ASBFN		S	S	ST
150	6				ASBFN	ASBFN	ASBF	ASBFN		S	S	ST
150	17				Z	Z	Z	Z		Z	Z	Z
225	1				ASBFN	ASBFN	ASBF	ASBFN		S	S	ST
225	2				ASBFN	ASBFN	ASBF	ASBFN		S	S	ST
225	3				ASBFN	ASBFN	ASBF	ASBF		S	S	ST
225	4				ASBFN	ASBFN	ASBF	ASBF		S	S	ST
225	5				ASBFN	ASBFN	ASB	ASBF		S	S	ST

Permitted Alternative Pipe/Bedding Combinations

Pipe Diameter (mm)	Pipe Group No.	Vitrified Clay					Pre-cast Concrete			Ductile Iron	GRP	Thermoplastic (Structured Wall)
		L	95	120	160	200	Class L	Class M	Class H			
225	6				ASBF	ASBFN	ASB	ASBF		S	S	ST
225	17				Z	Z	Z	Z		Z	Z	Z
300	1				ASBFN	ASBFN	ASBF	ASBF		S	S	ST
300	2				ASBFN	ASBFN	ASB	ASBF		S	S	ST
300	3				ASBFN	ASBFN	ASB	ASBF		S	S	ST
300	4				ASBFN	ASBFN	ASB	ASB		S	S	ST
300	5				ASBFN	ASBFN	ASB	ASB		S	S	ST
300	6				ASBFN	ASBFN	AS	ASB		S	S	ST
300	17				Z	Z	Z	Z		Z	Z	Z
375	1				ASBFN	ASBFN	ASB	ASBF	ASBFN			
375	2				ASBFN	ASBFN	ASB	ASBF	ASBF			
375	3				ASBFN	ASBFN	AS	ASBF	ASBF			
375	4				ASBFN	ASBFN	AS	ASBF	ASBF			
375	5				ASBFN	ASBFN	A	ASB	ASBF			
375	6				ASBFN	ASBFN	A	ASB	ASBF			
375	17				Z	Z	Z	Z	Z			
450	1			ASBF	ASBFN		AS	ASBF	ASBFN			
450	2			ASBF	ASBFN		AS	ASBF	ASBF			
450	3			ASBF	ASBFN		A	ASBF	ASBF			
450	4			ASBF	ASBFN			ASB	ASBF			
450	5			ASBF	ASBFN			ASB	ASBF			
450	6			ASBF	ASBFN			ASB	ASB			
450	17			Z	Z		Z	Z	Z			
600	1	ASB	ASBF					ASBF	ASBFN	S	S	ST
600	2	ASB	ASBF					ASBF	ASBF	S	S	ST
600	3	AS	ASBF					ASBF	ASBF	S	S	ST
600	4	AS	ASBF					ASBF	ASBF	S	S	ST
600	5	A	ASB					ASB	ASBF	S	S	ST
600	6	A	ASB					ASB	ASB	S	S	ST

Permitted Alternative Pipe/Bedding Combinations												
Pipe Diameter (mm)	Pipe Group No.	Vitrified Clay					Pre-cast Concrete			Ductile Iron	GRP	Thermoplastic (Structured Wall)
		L	95	120	160	200	Class L	Class M	Class H			
600	17	Z	Z					Z	Z	Z	Z	Z
750	1						ASB	ASBF	ASBFN			
750	2						ASB	ASBF	ASBF			
750	3						AS	ASB	ASBF			
750	4						AS	ASB	ASBF			
750	5						A	ASB	ASBF			
750	6						A	ASB	ASB			
750	17						Z	Z	Z			
900	1						ASB	ASBF	ASBFN	S	S	ST
900	2						ASB	ASBF	ASBFN	S	S	ST
900	3						AS	ASBF	ASBF	S	S	ST
900	4						AS	ASB	ASBF	S	S	ST
900	5						A	ASB	ASBF	S	S	ST
900	6						A	ASB	ASBF	S	S	S
900	17						Z	Z	Z	Z	Z	Z

Note 1 Bed Types shall be in accordance with Drawings F1 and F2 of the Highway Construction Details.

Note 2 Replacement pipes in an existing system shall match the existing where practicable.

2 Covers to Chambers and Gullies: Covers to chambers and gullies shall comply with the loading category of British Standard EN 124 as follows:

2.1 Chambers

2.1.1 Ductile heavy duty double triangular three point suspension non rock cover Class D400. Opening to be square.

2.1.2 Ductile medium duty double triangular three point suspension non rock cover Class B225.

2.1.3 Triple two piece gully type gratings Class D400 with waterway area 3330 cm².

2.2 Gullies

2.2.1 Single piece hinged gully grating Class C250 with waterway area 1240 cm².

2.2.2 Double triangular two piece non rock gully grating Class D400 with waterway area 1870 cm².

2.3 Rodding Eyes

2.3.1 Ductile non-rocking cover Class D400, B225 or C250 as appropriate to the location. The required loading category shall be determined by the Operating Company in accordance with this Contract.

3 Adjustment of level to covers and frames

3.1 Manhole and chamber covers shall be set or reset to the final levels prior to the laying of the uppermost wearing course or, if no surfacing Site activities are being undertaken, to the level of the surrounding ground surface.

3.2 Gully frames shall be set 6 mm below the level of the adjacent surface.

3.3 Covers and frames together with any shims, tiles, brick or other authorised material used to adjust the level shall be bedded using polyester epoxy or ultra-rapid hardening cementitious mortar applied in accordance with the manufacturer's written instructions.

4 Joints

4.1 The requirement for watertight joints shall be determined by the Operating Company in accordance with this Contract.

4.2 Use of rigid joints shall be determined by the Operating Company in accordance with this Contract.

5 Saddles

5.1 Use of saddles on existing pipes shall be permitted except where otherwise determined by the Operating Company in accordance with this Contract.

6 Connections

6.1 Requirements for connections to existing drains shall be determined by the Operating Company in accordance with this Contract.

7 Chambers

7.1 Chambers shall be constructed in accordance with HCD Drawings F3, F4, F5 and F11.

8 Gullies

8.1 Gullies shall be trapped or un-trapped as determined by the Operating Company in accordance with this Contract.

9 Cleaning

9.1 All existing drainage systems within the Unit shall be cleaned in accordance with clauses 520 and 521, Series 6100 and Schedule 7 Part 1.

APPENDIX 5/2 – SERVICE DUCT REQUIREMENTS

1 The permitted alternative design groups for service ducts shown on HCD I2 shall be types D1 to D4 as shown on drawing number 500/01/337-379 in Schedule 9 Part 3.

2 Depth to top of ducts shall be 600 mm in all cases.

3 Chambers shall be constructed with 225 mm thick walls of bricks complying with clause 2406 set in Class 1 mortar laid on a base slab 150 mm thick of mix ST4 concrete.

4 Covers and frames shall be bedded on Class 1 mortar.

5 Drawpits Types DP1 and DP2 shall be constructed in accordance with drawing number 500/05/160-166 in Schedule 9 Part 3.

6 Service ducts shall be built into the walls of the chambers.

7 Draw ropes for service ducts shall be secured by tying/fixing the draw rope to stoppers as detailed on drawing number 500/01/337-379 in Schedule 9 Part 3. Two metres of slack rope shall be provided at both ends of every duct.

APPENDIX 5/3 – SURFACE WATER CHANNELS AND DRAINAGE CHANNEL BLOCKS

Surface Water Channels and Drainage Channel Blocks shall be constructed as shown on drawing number 1100/01/085-115 in Schedule 9 Part 3.

APPENDIX 5/4 – FIN DRAINS AND NARROW FILTER DRAINS

Details of permitted types of fin drains and narrow filter drains together with any specific performance criteria shall be determined by the Operating Company in accordance with this Contract.

APPENDIX 5/5 – COMBINED DRAINAGE AND KERB SYSTEMS

Combined drainage and kerb systems shall be type DK1 to DK4 inclusive as referred to on drawing numbers 1100/02/124-127, 1100/02/130 and 1100/02/133 in Schedule 9 Part 3.

APPENDIX 5/7 – THERMOPLASTICS STRUCTURAL WALL PIPES AND FITTINGS

Information to be provided by the Operating Company

The Operating Company shall provide the following information in accordance with sub-clause 518.2 for the range of pipes and fittings (to be verified by the Certification body – see sub-clause 518.15).

1. Technical drawings showing dimensions and tolerances including sealing rings and weight per metre, together with properties, as specified in sub-clauses 518.3 and 518.5.

2. Material specification shall be in accordance with sub-clause 518.2:

Table 1 – Unplasticised polyvinyl-chloride (PVC-U)

Property	**Test method reference**	**Specification**
Tensile Properties	BS EN ISO 6259, BS EN ISO 527-1	
Vicat	BS EN 727	
Longitudinal reversion	BS EN ISO 2505	
K-value	BS EN 922	
PVC content	BS EN 1905	
Density	BS EN ISO 1183-3,	
Heat Reversion	ISO 12091	
Effects of heating (injection moulded fittings only)	BS EN ISO 580	

Table 2 – Polyethylene (PE)

Property	**Test method reference**	**Specification**
Tensile Properties	BS EN ISO 6259, BS EN ISO 527-1	
Oxygen induction time	BS EN 728	
Melt Flow Rate	BS EN ISO 1133	
Density	BS EN ISO 1183-3	
Melt Flow Rate	ISO 1133:2005	
Heat Reversion	ISO 12091	
Effects of heating (injection moulded fittings only)	BS EN ISO 580	

Table 3: Polypropylene (PP)

Property	**Test method reference**	**Specification**
Tensile Properties	BS EN ISO 6259, BS EN ISO 527-1	
Oxygen induction time	BS EN 728	
Melt Flow Rate	BS EN ISO 1133	
Density	BS EN ISO 1183-3	
Heat Reversion	ISO 12091	
Effects of heating (injection moulded fittings only)	BS EN ISO 580	

APPENDIX 6/1 – REQUIREMENTS FOR ACCEPTABILITY AND TESTING ETC OF EARTHWORKS MATERIALS

1 The acceptability of earthworks materials shall be determined by compliance with the Specification, including Table 6/1, as amended by this Appendix.

2 The Operating Company shall be responsible for the assessment and selection of materials in earthworks and shall be responsible for the classification of materials on Site, or off Site, as appropriate. Fill materials shall be assessed at the place of excavation or deposition, as required by the Operating Company.

3 Class 3 material shall not be used.

4 Material for disposal shall be removed to a licensed disposal facility.

Table 6/1 – Acceptable Earthworks Materials: Classification Requirements (see footnotes)

Class				General Material Description	Typical Use	Permitted Constituents (all subject to requirements of Class 601 and Appendix 6/1)	Material Properties Required for Acceptability (in addition to requirements on use of fill materials in Class 601 and testing in Clause 631)				Compaction Requirements in Clause 612	Class		
							Property (see exceptions in previous column)	Defined and tested in accordance with:	Acceptable Limits Within:					
									Lower	Upper				
GENERAL GRANULAR FILL	1	A	–	Well graded granular material	General Fill	Any material	(i) grading	BS 1377: Part 2	Tab 6/2	Tab 6/2	Tab 6/4 Method 2	1	A	–
							(ii) uniformity coefficient	See Note 5 (OE)	10	–				
							(iii) mc	BS 1377: Part 2	Omc - 2%	Omc + 2%				
	1	B	–	Uniformly graded granular material	General Fill	Any material	(i) grading	BS 1377: Part 2 (OE)	Tab 6/2	Tab 6/2	Tab 6/4 Method 3	1	B	–
							(ii) uniformity coefficient	See Note 5	–	10				
							(iii) mc	BS 1377: Part 2 (OE)	Omc - 2%	Omc + 1%				
	1	C	–	Coarse granular material	General Fill	Any material	(i) grading	BS 1377: Part 2 (OE)	Tab 6/2	Tab 6/2	Tab 6/4 Method 5	1	C	–
							(ii) uniformity coefficient	See Note 5	5	–				
							(iii) Los Angeles coefficient	Clause 635	–	50				

Class				General Material Description	Typical Use	Permitted Constituents (all subject to requirements of Class 601 and Appendix 6/1)	Material Properties Required for Acceptability (in addition to requirements on use of fill materials in Class 601 and testing in Clause 631)				Compaction Requirements in Clause 612	Class		
							Property (see exceptions in previous column)	Defined and tested in accordance with:	Acceptable Limits Within:					
									Lower	Upper				
GENERAL COHESIVE FILL	2	A	–	Wet cohesive material	General Fill	Any material	(i) grading	BS 1377: Part 2 (OE)	Tab 6/2	Tab 6/2	Tab 6/4 Method 1 except: – i) for materials with liquid limit greater than 50, determined by BS 1377: Part 2, only deadweight tamping or vibratory tamping rollers or grid rollers shall be used. ii) for chalk all types of vibratory rollers of Categories over 1800 kg shall not be used.	2	A	–
							(ii) plastic limit (PL)	BS 1377: Part 2 (OE)	–	–				
							(iv) MCV	Clause 632	8	15				
	2	B	–	Dry cohesive material	General Fill	Any material	(i) grading	BS 1377: Part 2 (OE)	Tab 6/2	Tab 6/2	Tab 6/4 Method 2	2	B	–
							(ii) plastic limit (PL)	BS 1377: Part 2 (OE)	–	–				
							(iii) mc	BS 1377: Part 2 (OE)	–	PL – 4%				
							(iv) MCV	Clause 632	8	15				
	2	C	–	Stony cohesive material	General Fill	Any material	(i) grading	BS 1377: Part 2 (OE)	Tab 6/2	Tab 6/2	Tab 6/4 Method 2	2	C	–
							(ii) plastic limit (PL)	BS 1377: Part 2 (OE)	–	–				
							(iii) MCV	Clause 632	8	15				
	2	D	–	Silty cohesive material	General Fill	Any material	(i) grading	BS 1377: Part 2 (OE)	Tab 6/2	Tab 6/2	Tab 6/4 Method 3	2	D	–

							(iii) MCV	Clause 632	8	14				
	2	E	–	Reclaimed pulverised fuel ash cohesive material	General Fill	Reclaimed material from lagoon or stockpile containing not more than 20% furnace bottom ash	(i) mc	BS 1377: Part 2 (OE)	To enable compaction to Clause 612		End product 95% of maximum dry density of BS 1377: Part 4 (2.5 kg rammer method)	2	E	–
							(ii) bulk density	BS 1377: Part 9	App 6/1	App 6/1				

Class				General Material Description	Typical Use	Permitted Constituents (all subject to requirements of Class 601 and Appendix 6/1)	Material Properties Required for Acceptability (in addition to requirements on use of fill materials in Class 601 and testing in Clause 631)				Compaction Requirements in Clause 612	Class		
							Property (see exceptions in previous column)	Defined and tested in accordance with:	Acceptable Limits Within:					
									Lower	Upper				
	4	–	–	Various	Fill to Landscape Areas	See Appendix 6/1	(i) grading	BS 1377: Part 2 (OE)			See clause 620	4	–	–
							(ii) MCV	Clause 632	8	15				
TOPSOIL	5	A	–	Topsoil, or turf, existing on Site	Topsoiling	Topsoil or turf designated as Class 5A in this Contract	(i) grading	Clause 618	–	Clause 618	–	5	A	–
TOPSOIL	5	B	–	Imported topsoil	Topsoiling	General purpose grade complying with BS 3882	–	–	–	–	–	5	B	–

Class				General Material Description	Typical Use	Permitted Constituents (all subject to requirements of Class 601 and Appendix 6/1)	Material Properties Required for Acceptability (in addition to requirements on use of fill materials in Class 601 and testing in Clause 631)				Compaction Requirements in Clause 612	Class		
							Property (see exceptions in previous column)	Defined and tested in accordance with:	Acceptable Limits Within: Lower	Acceptable Limits Within: Upper				
SELECTED GRANULAR FILL	6	A	–	Selected well graded granular material	Below water	Natural gravel, natural sand, crushed gravel, crushed rock other than argillaceous rock, crushed concrete, chalk, well burnt colliery spoil or any combination thereof.	(i) grading	BS 1377: Part 2 (On-site) (OE)	Tab 6/2	Tab 6/2	No compaction	6	A	–
								BS EN 933-2 (Off-site)	Tab 6/5	Tab 6/5				
							(ii) uniformity	See Note 5	10	–				
							(iii) plasticity index	BS 1377: Part 2 (OE)	Non-plastic					
	6	B	–	Selected coarse granular material	Starter layer	Natural gravel, natural sand, crushed gravel, crushed rock, crushed concrete, chalk, well burnt colliery spoil, slag or any combination thereof.	(i) grading	BS 1377: Part 2 (OE) (On-site)	Tab 6/2	Tab 6/2	Tab 6/4 Method 5	6	B	–
								BS EN 933-2 (Off-site)	Tab 6/5	Tab 6/5				
							(ii) plasticity index	BS 1377: Part 2 (OE)	Non-plastic					
							(iii) Los Angeles Coefficient	Clause 635	–	50 kN				

Class				General Material Description	Typical Use	Permitted Constituents (all subject to requirements of Class 601 and Appendix 6/1)	Material Properties Required for Acceptability (in addition to requirements on use of fill materials in Class 601 and testing in Clause 631)				Compaction Requirements in Clause 612	Class		
							Property (see exceptions in previous column)	Defined and tested in accordance with:	Acceptable Limits Within:					
									Lower	Upper				
SELECTED GRANULAR FILL	6	C	–	Selected uniformly graded granular material	Starter layer	Natural gravel, natural sand, crushed gravel, crushed rock other than argillaceous rock, crushed concrete, chalk, well burnt colliery spoil, slag or any combination thereof. (	(i) grading	BS 1377: Part 2 (OE) (On-site)	Tab 6/2	Tab 6/2	Tab 6/4 Method 3	6	C	–
								BS EN 933-2 (Off-site)	Tab 6/5	Tab 6/5				
							(ii) uniformity coefficient	See Note 5	–	10				
							(iii) plasticity index	BS 1377: Part 2 (OE)	Non-plastic					
							(iv) Los Angeles Coefficient	Clause 635	–	50				
							(v) mc	BS 1377: Part 2 (OE)	Optimum mc -2%	Optimum mc +1%				
	6	F	2	Selected granular material (coarse grading	Capping	Any material, or combination of materials, other than unburnt colliery spoil and argillaceous rock. Property (iv) in the next column shall not apply if Class A (asphalt) content is 20% or less.	(i) grading	BS 1377: Part 2 (OE)	Tab 6/2	Tab 6/2	Tab 6/4 Method 6	6	F	2
							(ii) optimum mc	BS 1377: Part 4 (vibrating hammer method) (OE)	–	–				
							(iii) mc	BS 1377: Part 2(OE)	Optimum mc -2%	Optimum mc				
							(iv) Los Angeles Coefficient	Clause 635	–	50				
							(v) Class A asphalt content	Clause 710	–	50%				
							(vi) bitumen content	BS EN 12697-1 or BS EN 12697-39	–	2.0%				

Class				General Material Description	Typical Use	Permitted Constituents (all subject to requirements of Class 601 and Appendix 6/1)	Material Properties Required for Acceptability (in addition to requirements on use of fill materials in Class 601 and testing in Clause 631)				Compaction Requirements in Clause 612	Class		
							Property (see exceptions in previous column)	Defined and tested in accordance with:	Acceptable Limits Within: Lower	Acceptable Limits Within: Upper				
SELECTED GRANULAR FILL	6	G	–	Selected granular material	Gabion filling	Natural gravel, crushed rock, crushed concrete or any combination thereof. None of these constituents shall include any argillaceous rock.	(i) grading	BS 1377: Part 2 (On-site) (OE)	Tab 6/2	Tab 6/2	None	6	G	–
								BS EN 933-2 (Off-site)	Tab 6/5	Tab 6/5				
							(ii) Los Angeles Coefficient	Clause 635	–	50				
	6	N	–	Selected well graded granular material	Fill to structures	Natural gravel, natural sand, crushed gravel, crushed rock, crushed concrete, slag, well burnt colliery spoil, or any combination thereof. None of these constituents shall include any argillaceous rock. Recycled aggregate except recycled asphalt.	(i) grading	BS 1377: Part 2 (On-site) (OE)	Tab 6/2	Tab 6/2	End product 95% of maximum dry density of BS 1377: Part 4 (vibrating hammer method)	6	F	2
								BS EN 933-2 (Off-site)	Tab 6/5	Tab 6/5				
							(ii) uniformity coefficient	See Note 5	10	–				
							(iii) Los Angeles Coefficient	Clause 635	–	40				
							(v) effective angle of internal friction (φ') and effective cohesion (c')	Clause 636	To be determined by the Operating Company	–				

Class				General Material Description	Typical Use	Permitted Constituents (all subject to requirements of Class 601 and Appendix 6/1)	Material Properties Required for Acceptability (in addition to requirements on use of fill materials in Class 601 and testing in Clause 631)				Compaction Requirements in Clause 612	Class		
							Property (see exceptions in previous column)	Defined and tested in accordance with:	Acceptable Limits Within:					
									Lower	Upper				
SELECTED GRANULAR FILL	6	N	–	Selected well graded granular material	Fill to structures	Natural gravel, natural sand, crushed gravel, crushed rock, crushed concrete, slag, well burnt colliery spoil, or any combination thereof. None of these constituents shall include any argillaceous rock. Recycled aggregate except recycled asphalt.	(vi) permeability	Clause 640	To be determined by the Operating Company	–		6	N	–
							(vii) mc	BS 1377: Part 2 (OE)	To be determined by the Operating Company	To be determined by the Operating Company				

Footnotes to Table 6/1

1 App = Appendix

2. Tab = Table

3. Where in the Acceptable Limits column reference is made to Appendix 6/1, the Operating Company shall submit the proposed acceptance limits to the Overseeing Organisation for its consent.

4. Where BS 1377: Part 2 is specified for mc, this shall mean BS 1377: Part 2 or BS EN 1097-5 as appropriate.

5. Uniformity coefficient is defined as the ratio of the particle diameters

   D60 to D10 on the particle-size distribution curve, where:

   D60 = particle diameter at which 60% of the soil by weight is finer

   D10 = particle diameter at which 10% of the soil by weight is finer

6. The limiting values for Class U1B material are given in Appendix 6/14 and Appendix 6/15

7. Table 6/1 contains details of materials that are considered to be those most commonly encountered on the network. However, this does not preclude the use of other materials, which use shall be determined by the Operating Company in accordance with other provisions of this Contract.

APPENDIX 6/2 – REQUIREMENTS FOR DEALING WITH CLASS U1B AND CLASS U2 UNACCEPTABLE MATERIALS

For specific Schemes where Class U1B or Class U2 unacceptable material is encountered the Operating Company shall submit its proposals for dealing with the material to the Overseeing Organisation for its consent.

APPENDIX 6/3 – REQUIREMENTS FOR EXCAVATION, DEPOSITION, COMPACTION (OTHER THAN DYNAMIC COMPACTION)

1 The use of a nuclear moisture/density gauge is permitted for measuring field dry densities of fill to Structures and fill above structural foundations where an end product compaction requirement is specified in Table 6/1.

2 Embankments shall be constructed in general with side slopes not steeper than 1 in 2.

APPENDIX 6/5 – GEOTEXTILES USED TO SEPARATE EARTHWORKS MATERIALS

Geotextile Type 1 shall be a general purpose woven or non-woven geotextile of nominal weight 100 g/m^2.

APPENDIX 6/8 – TOPSOILING

1. The thickness of topsoil to be deposited shall be determined by the Operating Company in accordance with this Contract.

2. Tracked vehicle shall not be used to spread topsoil.

3. The use of topsoil class 5B shall be determined by the Operating Company in accordance with this Contract.

APPENDIX 6/10 – GROUND ANCHORAGES, CRIB WALLING AND GABIONS

1. Unless stated otherwise in an Order gabions shall be constructed using a cage of 80 mm nominal mesh opening filled with Class 6G material of grading 100 mm to 200 mm.

   Any variation in nominal mesh opening together with overall cage dimensions to suit specific Scheme requirements shall be determined by the Operating Company.

2. Where a plastic geomesh is proposed the properties shall determined by the Operating Company.

APPENDIX 6/14 – LIMITING VALUES FOR POLLUTION OF CONTROLLED WATER

1. The Operating Company shall determine for each Scheme the limiting values in a material for pollution of controlled waters.

   These values may be expressed as total concentrations in the material or preferably as concentrations of cumulative leached amounts in standard leaching tests carried out on the materials.

2. The Operating Company shall through consultation with the Scottish Environment Protection Agency establish generic guideline values for given soil conditions or shall undertake Scheme specific risk assessments in order to derive such values. Any values established in this manner shall be approved by Scottish Environment Protection Agency.

3. The Operating Company shall include for all testing requirements in relation to this Appendix in the Management System as part of its Inspection and Test Plan in accordance with the requirements of Appendix 1/5.

4. In addition to the above requirements the Operating Company shall comply with the schedule of commitments given in the Environmental Statement for the Forth Replacement Crossing insofar as they relate to operations. These are re-stated in Annex 5.8/A of Schedule 5 Part 8.

APPENDIX 6/15 – LIMITING VALUES FOR HARM TO HUMAN HEALTH AND THE ENVIRONMENT

1. The Operating Company shall determine for each Scheme the limits on the amount of contaminants in a material which if exceeded shall lead to a significant possibility of significant harm to human health or the environment.

2. The Operating Company shall through consultation with the Scottish Environment Protection Agency establish generic guideline values for given soil conditions or shall undertake Scheme specific risk assessments in order to derive such values. Any values established in this manner shall be approved by Scottish Environment Protection Agency.

3. The Operating Company shall include for all testing requirements in relation to this Appendix in the Management System as part of its Inspection and Test Plan in accordance with the requirements of Appendix 1/5.

APPENDIX 7/1 – TS – FLEXIBLE PAVEMENT OPTIONS

1 Permitted Pavement Options – Schedule 1 – Not Used.

2 General Requirements – Schedule 2

Schedule 2 : General Requirements		
Grid for checking surface levels of pavement courses (702.4)	Longitudinal Dimension	10 m
	Transverse Dimension	Centre joint Middle of lane 300mm from each channel
Surface regularity (702.7)	Category of Road	A* * required on daily surfacing lengths of 250m or greater.
Interval for measurement of longitudinal regularity		Continuous in any line or lines parallel to the edge of pavement
Interval for measurement of transverse regularity		10 meters
Surface texture is required: Note – Not applicable to TS2010, details given in Schedule 5: Requirements for Construction Materials.		In accordance with the Specification
Measurement of surface texture is required Note – Not applicable to TS2010, details given in Schedule 5: Requirements for Construction Materials.		Yes, on daily surfacing lengths of 75m or greater.
Full documentation of the manufacturer's design shall be supplied to the Overseeing Organisation for his written consent before the commencement of laying of any material designed in accordance with MCHW.		

3 Permitted Construction Materials – Schedule 3

Schedule 3: Permitted Construction Materials		
Pavement Options		
Pavement Layer	Material Reference	Thickness (mm)
Surface Treatment	HFS	Scheme Specific*
Surface Course	SCT, SCH, SCM, SCS	Scheme Specific*
Binder Course	BCa, BCb, BCc, BCR, BEMa, BEMb, BSCH	Scheme Specific*
Base	Ba, Bb, Bc, BEMa, BEMb	Scheme Specific*
Subbase	SB1, SB2	Scheme Specific*
Regulating	RCa, RCb	Varies
Total Thickness*		Scheme Specific

* Scheme Specific Information shall be determined by the Operating Company in accordance with the other provisions of this Contract.

4. General Requirements for Construction Materials – Schedule 4

Schedule 4: General Requirements for Construction Materials	
Clause	Requirement
801.2 and 801.3	Limiting distance for deposition of unbound mixtures shall be 500mm
801.7	All materials shall be non frost susceptible
802.4	Materials up to 225mm thickness shall be spread and compacted in one layer
900 Series	All supplies of Asphalt materials shall be approved under Sector Scheme 14, "Quality Assurance of the Production of Asphalt Mixes".
901.3 and 942.5	In addition to the requirements of clauses 901.3 and 942.5 the coarse aggregate in all base and binder course materials shall be crushed rock. Blast furnace slag and steel slag are not permitted as coarse aggregate.
901.9 and 903.27	In addition to the requirements of Cl 901.9, temporary running surfaces shall have a minimum PSV of 55. Where binder course and base are to be trafficked, limestone aggregates shall not be used.
903.25	Sealant shall be applied to any freestanding edge of the finished pavement.

(i) The minimum PSV and maximum AAV requirements for the permitted surface course materials listed in Schedule 5 of this Appendix shall be Scheme specific and shall be determined in accordance with Tables 3.1 and 3.2 of HD 36/06 or equivalent of the DMRB respectively.

The required values for each Scheme shall be determined by the Operating Company in accordance with the other provisions of this Contract.

(ii) Individual layer thicknesses shall be Scheme specific and the required values for each Scheme shall be determined by the Operating Company in accordance with the other provisions of this Contract.

(iii) Cement and other Hydraulically Bound Mixtures complying with clauses 810 to 880 shall only be permitted for use with the prior written consent by the Overseeing Organisation.

The requirements for these materials when proposed for use shall be determined by the Operating Company in accordance with the other provisions of this Contract.

5 Requirements for Construction Materials – Schedule 5

Schedule 5: Requirements For Construction Materials				
Material Ref.	Clause	Description	Grade of Binder	Requirement
HFS	924	High Friction Surface		Minimum PSV: 70 Classification: Type 1– to be determined by the Operating Company in accordance with the other provisions of this Contract. Min PSV and Max AAV: See note (i) in Schedule 4 above . Coloured surfaces may be required in some areas.
SCT	942	Thin Surface Course System Note: The use of this material shall be subject to written consent by the Overseeing Organisation on a Scheme specific basis with the exception of small areas of repair to existing surface courses where clause 942 material has been used.	Nominated by supplier to meet requirements	The following parameters shall be determined by the Operating Company in accordance with the other provisions of this Contract: 1. Traffic count in cvd/l/day 2. Site Classification 3. Minimum wheel-tracking level required on BBA HAPAS Roads and Bridges Certificate 4. Resistance to permanent deformation. Level 3 shall apply unless otherwise stated on the order, or otherwise agreed 5. Road/tyre noise level relative to HRA required on BBA HAPAS Roads and Bridges Certificate 6. Macrotexture shall be in accordance with clause 942.13 and Cl 942.14 unless stated on the Order or otherwise agreed. 7. Clause 942.15 and 942.16 shall apply unless otherwise stated on the Order, or otherwise agreed. Note: Where repairs require to be carried out to a surface of area less than 100m^2 which shall be composed of a Thin Surface Course System the material used shall be of type previously used.

Schedule 5: Requirements For Construction Materials				
Material Ref.	Clause	Description	Grade of Binder	Requirement
SCS	974AR	Transport Scotland SMA (2010)	Nominated to suit requirements	As clause 974AR.
SCM	971AR	SMA	Nominated to suit requirements	As clause 971AR.
SCH	911TS	Hot Rolled Asphalt Surface Course (Design Mix)	40/60	HRA 35/14 C surf 40/60. HRA 35/14 F surf 40/60. 14/20 Pre coated chippings to Cl 915 shall be used. Min PSV and Max AAV of chippings: See note 4.1 of this Appendix. Surface Macrotexture is required in accordance with clause 921.
Ba Bb Bc	929	Base Asphalt Concrete	As Requirement	Sub clauses 945.1 and 945.2 shall apply. Void content at refusal is to be monitored in the permanent work in accordance with clause 929.3 Deformation resistance is required in accordance with Class 2, Table D2 of PD 6691 Deformation resistance shall be monitored in accordance with clause 929.5 Ba : AC32 HDM base 40/60 des. Bb : AC32 dense base 40/60 des. Bc : AC32 HMB base 30/45 des.
BCa BCb BCc	929	Binder Course Asphalt Concrete	As Requirement	Sub clauses 945.1 and 945.2 shall apply. Void content at refusal is to be monitored in the permanent work in accordance with clause 929.3 Deformation resistance is required in accordance with Class 2, Table D2 of PD 6691

Schedule 5: Requirements For Construction Materials				
Material Ref.	Clause	Description	Grade of Binder	Requirement
				Deformation resistance shall be monitored in accordance with clause 929.5 BCa : AC20 HDM bin 40/60 des. BCb : AC20 dense bin 40/60 des. BCc : AC20 HMB bin 30/45 des.
BCR	906	Dense Binder Course Asphalt Concrete (Recipe)	100/150 40/60	AC20 dense bin 100/150 rec. AC20 dense bin 40/60 rec. AC32 dense base 100/150 rec. AC32 dense base 40/60 rec.
BSCH	943	Binder Course (Hot Rolled Asphalt)		Wheel tracking to comply with Class 2 to Table C3 to PD 6691:2007;
BEMa BEMb	930	EME Base and Binder Course Asphaltic Concrete	As Requirement	BEMa: AC 10 EME2 bin/base 15/25 des. BEMb: AC 14 EME2 bin/base 15/25 des.
RCa RCb	907	Regulating	As Requirement	Tolerance: Laid to achieve the appropriate horizontal tolerances to clause 702. Stone Mastic Asphalt to Cl 937 shall be used where thicknesses are less than 55mm. Cl 929 binder course shall be used where thicknesses exceed 55 mm. RCa : AC20 dense bin 40/60 des. RCb : Appropriate binder/aggregate size from Cl 937. Max coarse agg size 14mm.
SB1	803	Type 1 Granular Material		Crushed Gravel Coarse Aggregate - shall be permitted with the written consent by the Overseeing Organisation. Minimum CBR – 30%. Trafficking Trial – Not Required.

Schedule 5: Requirements For Construction Materials				
Material Ref.	Clause	Description	Grade of Binder	Requirement
SB2	804	Type 2 Granular Material		Minimum CBR – 30%. More than 50% asphalt arisings – Not permitted.

6 Thin Surface Course Systems: Information to Be Provided By The Operating Company - Schedule 6

The Operating Company shall provide the following information:

(i) A copy of the British Board of Agreement HAPAS Roads and Bridges Certificate or Certificates or equivalent for the Thin Surface Course System or Systems that shall be proposed for use in the Scheme, together with a copy of the quality plan and Installation Method Statement associated with each Certificate.

(ii) For any Certificate that covers several variants of one Thin Surface Course System, proposed variant or variants of the system to be used in the Scheme *[variants of a system occur from any option that results in different values being reported on the Certificate for one or more properties, and could involve changes in nominal maximum aggregate size, aggregate type, aggregate grading, binder type, binder content, fibres or other additives, type and rate of spread of bond coat]*.

(iii) If required or if the Thin Surface Course System shall not be produced under a Sector Scheme, the proposed component materials to be used in the Thin Surface Course System and their proportions for each proposed System.

(iv) Proposed source or sources of coarse aggregate together with statement of properties including Polished Stone Value, Aggregate Abrasion Value, Los Angeles Coefficient and flakiness index.

(v) If regulating material shall be used, evidence of its deformation resistance either independently or in combination with the Thin Surface Course System.

7 Modified Binder and Mixture Data Requirements - Schedule 7

The following data shall be provided to the Overseeing Organisation for modified binders as required in sub-clause 937.4, and for materials the subject of a Design in accordance with 911, 929 and 930 in respect of the proposed binder [note: all these clauses cover materials that shall be designed by the supplier].

The data shall not be more than 26 weeks old. Appendix 7.1/Table 7/1 in which the binder data may be recorded is given at the end of this section.

7.1 Binder Samples

Bituminous binders shall be sampled from the delivery according to British Standard EN 58. For modifiers blended with the other component materials of the mixture at the mixer a simulated binder shall be prepared. Such modifiers are generally less intimately mixed with the bitumen and less well dispersed throughout the mixture than when pre-blended. Evidence that the simulated binder offers the same performance as the binder produced when the modifier is added at the mixer shall be provided to the Overseeing Organisation.

7.2 Penetration

Binder penetration at 25°C (British Standard EN 1426), 100g 5secs and at 5°C 200g 60secs, before and after hardening in the Rolling Thin Film Oven Test in accordance with British Standard EN 12607-1, or alternatively after RTFOT and Ageing in accordance with clause 955.

7.3 Product Identification Test and Rheological Properties

Results for the binder(s) proposed shall comprise rheological data for each binder in the form of complex shear (stiffness) modulus (G*) and phase angle (δ) determined in accordance with clause 956 for binder as supplied, after RTFOT and Ageing in accordance with clause 955.

7.4 Storage Stability Test

All binders shall be stored strictly in accordance with the manufacturer's instructions. Polymer modified binders claimed to remain homogeneous in storage without agitation shall be tested for storage stability in the manner described in clause 958. The mean of the differences in softening point between the top and bottom samples, of not less than five pairs of such samples shall not exceed 5°C. Manufacturers of pre-blended modified binders shall state in writing what precautions shall be necessary to ensure that adequate homogeneity shall be maintained during storage.

7.5 Photomicrograph

A typical photomicrograph of the modified binder and binder using ultra-violet or other technique to provide maximum contrast of the polymer structure to the binder before modification shall be supplied together with details of sample preparation techniques.

7.6 Cohesion

Vialit Pendulum cohesion test curve of the binder, in accordance with clause 957 for the binder as supplied, after RTFOT and after RTFOT and Ageing in accordance with clause 955.

7.7 **FRAASS Brittle Point (IP 80)**

FRAASS brittle point measured using British Standard EN 12593 shall be provided on the binder as supplied, after RTFOT and Ageing in accordance with clause 955.

Table 7/1 - Modified Binder and Mixture Data Requirements

Manufacturer of Binder	Product Name		
Binder Type		Batch Reference	
Binder source			
Softening point difference in storage stability test			
Test	Supplied Binder	After RTFOT	After Ageing
Penetration at 25°C 0,1 mm (100g and 5secs)			
Penetration at 5°C 0,1 mm (200g and 60secs)			
Vialit pendulum cohesion See clause 957 maximum peak value J/cm^2	#	#	#
Fraass brittle point			
Other properties the Operating Company considers useful and/or necessary			

Where indicated with # the Operating Company shall attach a graphical output to this schedule.

8 Mixture Data Requirements - Schedule 8

The following data shall be provided to the Overseeing Organisation for materials designed in accordance with clause 901.17, clause 911, clause 929, and clause 930 in respect of the proposed mixture:

(i) Saturation Ageing Tensile Stiffness (SATS) ratio – as described in clause 953.

9 **EME2 Base and Binder Additional Requirements for Joints**

9.1 Joints in EME2 shall when possible be formed "hot to hot".

9.2 "Hot to hot" joints shall be formed by multiple pavers working in echelon. The distance between the pavers shall be as short as possible to ensure the open joint between the two pavers is kept hot. The screed of the second paver shall overlap the first by a minimum of 20mm.

9.3 "Hot to cold" joints shall be well compacted, free from cracks and angled at a minimum ratio of 1:2. This angle shall be produced by a joint former on the paver screed and a compaction pinch wheel on the roller.

9.4 During the first pass of the roller, along the longitudinal joint, the edge shall be compacted and shaped by the compaction pinch wheel. The compaction pinch wheel shall be mounted on the front roller on a tandem crab steer roller.

9.5 If the paver does not form the joint correctly, the defective area must be removed in a straight line. The new joint shall be cut in hot material only and checked with a suitable straightedge and marked to the full extent of the defective area.

9.6 Open joints shall be cut and shaped using the following methods:

- Cut while hot with a cutting disk on the roller.
- Milling off with a planer.
- By hand shaping with a shovel or rake (Small areas only).

9.7 To protect the joint, the cut-away waste material shall be left in place, until the new EME2 is to be laid. After removal of the cut-away material, the joint shall be cleaned and prepared as in the paragraph below.

9.8 The joint shall be cleaned of all deleterious material and specialised hot polymer modified bitumen complying with British Standard EN 14188-1:2004, Grade N2 shall be applied to all inclined faces of EME2. It shall be hot sprayed over the entire inclined face of the joint at a rate of 0.2 litres/m per 40mm depth and the runoff shall collect on the existing base or binder. Adjustments to spread rate shall be made for deeper layers on a pro-rata basis.

9.9 Where there is a vertical joint between existing and new materials that have different characteristics, hot applied joint materials complying with BS EN 14188-1:2004, Grade N1 or polymer modified bitumen sealing strips shall be used in accordance with the manufacturer's instructions.

9.10 Transverse day joints shall be kept to a minimum and constructed in the same way as longitudinal "Hot to Cold" joints.

APPENDIX 7/2 – EXCAVATION, TRIMMING AND REINSTATEMENT OF EXISTING SURFACES

1 The cross sectional diagram of a typical trench reinstatement shall be as shown in HCD Drawing K4.

APPENDIX 7/3 – SURFACE DRESSING – PERFORMANCE SPECIFICATION

SHEET 1

1 The design for surface dressing shall be carried out by the Operating Company in accordance with clause 922 and *TRL Road Note 39* (6th Edition) together with the requirements of this Appendix.

The *Code of Practice for Surface Dressing* (RSDA 2004) is referred to within *TRL Road Note 39* and shall be complied with for this work.

Where there is conflict between the requirement of clause 922 and *Road Note 39, Road Note 39* shall take precedence.

2 Patching and crack repair of the existing carriageway shall be carried out at least 21 days in advance of the surface dressing.

Patching with a high stone content material shall have a similar hardness to existing adjacent surfacing and shall not have horizontal sealing strip applied.

3 Seasons and Weather Conditions – in accordance with TRL *Road Note 39* Table 14.3.

4 Permitted options shall be restricted to 'racked-in' surface dressing systems and double surface dressing systems.

5 Binder shall be modified Premium Grade. Both cut-back bitumen and bitumen emulsion are permitted.

6 Binder cohesivity shall be a minimum of 1.2 J/cm^2.

7 Binder Rate of Spread – in accordance with *TRL Road Note 39* adjusted where appropriate for local conditions and experience. Accuracy of binder sprayer shall be as Table NG 9/14 Category 2*.

8 Chippings Rate of Spread – in accordance with TRL *Road Note 39* Section 9. Accuracy of chipping spreader shall be as Table NG 9/15. Category 2.

9 Values for PSV and AAV shall be determined in accordance with this Contract (HA DMRB).

10 Maximum pavement temperature – in accordance with *TRL Road Note 39* Table 14.3.

11 The Operating Company shall obtain an independent measurement of surface texture using the high speed texture meter or the high speed road monitor and shall submit details of the results to the Overseeing Organisation.

Measurement of sensor measured texture depth shall be made in the nearside and offside wheel tracks of all Lanes.

The texture depth shall be measured after 11 months and before 13 months following initial trafficking and finally after 22 months and before the end of the guarantee period.

The minimum average sensor measured texture depth at any time up to 2 years after opening to traffic shall be 1.05 mm for every 100 metre Lane length.

In addition the percentage decrease in sensor measured texture depth between 1 and 2 years shall not exceed 40 per cent.

In the case of non-compliance detailed examination of the printout and the areas in question shall be undertaken by the Operating Company.

Remedial work shall be for a minimum length of 100 metres and full Lane width.

Surface dressings shall be visually monitored by the Operating Company for 2 years after opening to traffic and if, the following values are exceeded, remedial measures shall be undertaken:

(i) Fatting up, tracking, and bleeding: Table NG 9/20.

(ii) Scabbing and tearing: Table NG 9/21.

(iii) Fretting: Table NG 9/22.

(iv) Streaking: Table NG 9/23.

12 The Operating Company shall determine the extent of failures and undertake remedial measures.

The Overseeing Organisation's written consent for proposed remedial measures shall be obtained prior to remedial work taking place.

13 The speed of traffic allowed onto new surface dressing shall be limited to 15 mph by a suitable temporary traffic management scheme including the use of slow moving control vehicles.

The surface dressing shall be designed such that by the end of each work shift the surface dressing is stable and all excess chippings shall be removed by suitable suction sweeper with no requirement for further sweeping.

In addition to the design proposal and binder data sheet the Operating Company shall keep, compile and maintain the Records required by TRL *Road Note 39* clause 8.4 together with the following:

(i) type of surface dressing,

(ii) site sample peak binder cohesivity and the temperature range over which the specified minimum applies,

(iii) weather condition including humidity measurement,

(iv) road surface temperature, and

(v) Sensor measured texture depth measurements (12 and 24 months).

SHEET 2 – Information to be provided by the Operating Company

The Operating Company shall provide the following information to the Overseeing Organisation, upon request:

1 A copy of British Standard EN ISO 9001 Certificate showing at least the name of the company, the name of the certification body and the reference number and date of the Certificate.

A copy of the relevant part of the company Quality Assurance document showing the appropriate scope and limitations of the certification.

The Overseeing Organisation may wish to inspect all or any of the company's Quality Assurance documentation as part of the vendor assessment system and may wish to satisfy itself on the nature of the Quality Assurance systems of the company's material suppliers.

2. Proposed binders together with their data sheets, product identification data and cohesivity data as specified.

3. Proposed source or sources of chippings together with statement of properties including target grading, target flakiness, minimum declared PSV and AAV.

4. A method statement for each Site or group of similar Sites showing how it shall be proposed to carry out the Site activities in conformance with the Specification.

5. Proposals for traffic control and aftercare for each Site and reaction times for carrying out remedial measures and sweeping.

6. Contingency plans in the event of any breakdown of plant or failure of the dressing and provision for dusting.

7. A Type Approval Installation Trial Certificate within the *Sector Scheme for the Production of Surface Dressing* or in the event of no Certificates being issued, a statement of any previous applications on roads similar in site type and road hardness, containing the same data as listed in Sheet 3 of this Appendix.

8. A statement of relevant experience and expertise, naming managers, supervisors and teams responsible for and allocated to this Contract.

9. Design proposal for surface dressing for each location.

10. Estimated design life of the surface dressing for each location.

11 For the performance specification the results of any other tests or other data the Operating Company considers would assist the Overseeing Organisation in assessing the technical merit of the design.

12. An 'As Built Manual' as specified in sub-clause 922.18.

Binder Data Sheet – Appendix 7/3 Surface Dressing – Performance Specification			
Manufacturer of Binder:	Product Name:		
Binder type:	Batch no:		
Binder Grade (highlight as required)	Conventional	Intermediate	
	Premium	Super-premium	
Binder source:	Supplied Binder	Aged Binder	Recovered Binder
Test	As supplied to Site	Recovered in accordance with clause 955	Age Binder in accordance with clause 955
Penetration at 25˚C 0,1 mm (100g and 5 secs)			
Penetration at 5˚C 0,1 mm (200g and 60 secs)			
Manufacturer's Quality Assurance viscosity test for supplied cutback binder within temperature range 100˚C to 160˚C or alternatively penetration at 5˚C 0,1 mm (100g and 5 secs)	†		
Vialit pendulum cohesion, see clause 957 maximum peak value J/cm²	†#	#	#
Product identification test sub-clause 922.6. Complex shear (stiffness) modulus (G*) and phase angle (δ) data. See clause 956.			#
Minimum viscosity STV 4 mm cup at 40˚C or Redwood II at 85˚C, (required to prevent binder flow on road – normal camber)	‡		
Other properties this Operating Company considers useful and/or necessary			
Weather limits – information from binder manufacturer: road or air temperatures, humidity, wind chill adjustment, tolerance of surface dampness and other weather related factors	Temperature max: Temperature min: Other:		

Where indicated with # this Operating Company shall attach a graphical output to this schedule.

† Cutback binders only.

‡ Emulsions only.

Shaded cells do not require data.

SHEET 3 –Type Approval Installation Trial Certificate Information to Be Provided By The Operating Company

The Operating Company shall provide the Type Approval Installation Trial Certificate containing at least the following information for each Scheme:

Company Name and Address:

Quality Assurance reference number and certifying body:

TAIT reference number:

Date of TAIT:

Self-certified within the Sector Scheme for the Production of Surface Dressing or certified by British Board of Agreement (BBA):

Proprietary Name:

Description of material:

Design procedure or method:

Material thickness (if applicable):

Macrotexture depth at 1 year (as measured and as a percentage of the initial value):

Colour retention (if applicable):

Other optional claims as declared by the installer (e.g. Profile improvement, reduced tyre-road noise emission or RSI, ability to accommodate a variable substrate, skid resistance if greater than PSV and macrotexture would indicate, etc.)

Expected life (Estimated Design Life):

Field of application for the particular material:

Traffic – maximum commercial vehicles per Lane per day

Traffic – total traffic per Lane per day

Traffic – Speed limit

Degree of Site difficulty, see HD 36 (DMRB 7.5.1) or equivalent for categories.

Constraints on application for the particular material:

Time of year

Temperature

Variability of existing surface hardness or type

Other as declared by the installer.

Name and signature of company representative responsible for the TAIT.

APPENDIX 7/4 – BOND COATS, TACK COATS AND OTHER BITUMINOUS SPRAYS

SHEET 1

1 Polymer modified bond coats shall be used beneath all bituminous layers on bridge decks.

2 All street furniture, ironwork and drop-kerbs shall be masked.

SHEET 2 – Information to be provided by the Operating Company

The Operating Company shall compile the following information prior to the commencement of Operations and shall obtain the following information prior to the commencement of Works:

1 The product or products proposed, together with their data sheets, product identification data, cohesivity data as specified.

2 For each product, a copy of the British Standard EN ISO 9001 Certificate showing the name of the manufacturer the name of the certification body and the reference number and date of the Certificate.

3 The spraying equipment proposed and a test Certificate.

4 The source or sources of blinding material proposed.

5 Contingency plans in the event of any breakdown.

6 The results of any other tests or other data the Operating Company considers would assist the Overseeing Organisation in assessing the technical merit of the treatment such as:

(i) Tackiness test and/or trafficability time and methods of test,

(iii) Breaking time test results for different weather conditions and substrates, and

(iv) Test results for bond to newly laid concrete. The data supplied shall be not more than 26 weeks old.

Binder Data Sheet – Appendix 7/4	Bond Coats, Tack Coats and Other Bituminous Sprays	
Manufacturer of Binder:	Product Name:	
Binder type:	Batch no:	
Binder Grade (highlight as required)		
Conventional Intermediate Premium Super-premium Non-tack Other		
Binder Source →	Recovered Binder	Recovered Binder after Ageing Test
Test	Recovered in accordance with clause 955	Aged in accordance with clause 955
Penetration at 25˚C 0,1 mm (100g and 5 secs)		
Penetration at 5˚C 0,1 mm (200g and 60 secs)		
Vialit pendulum cohesion see clause 939 maximum peak value J/cm²	The Operating Company shall attach a report and graphical output to this schedule as specified in clause 957	The Operating Company shall attach a report and graphical output to this schedule as specified in clause 957
Product identification test. The provision of data for identification and ageing is optional for unmodified bituminous emulsions to BS 434 and for bitumen to BS EN 12591 and cutback bitumen to BS 3690. Complex shear (stiffness) modulus (G*) and phase angle (δ) data. See clause 928.	The Operating Company shall attach a report and graphical output to this schedule as specified in clause 956	The Operating Company shall attach a report and graphical output to this schedule as specified in clause 956
Other properties the Operating Company considers useful and/or necessary: Minimum Binder Content Binder temperature range for spray application Emulsion Properties and Viscosity Break time Breaking Agent type Weather limits – information from binder manufacturer: road or air temperatures, humidity, wind chill adjustment, tolerance of surface dampness and other weather related factors Temperature maximum: Temperature minimum: Other:		

APPENDIX 7/6 – BREAKING UP OR PERFORATION OF EXISTING PAVEMENTS

1 Where perforation of existing pavements is required the Operating Company shall perforate the full depth of the existing carriageway construction with holes of 100 mm minimum diameter on a 500 mm x 500 mm grid.

2 No perforation shall be made within 750 mm of a chamber, cover, box or grating in the pavement surface or of an edge of a pavement.

APPENDIX 7/7 – SLURRY SURFACING INCORPORATING MICROSURFACING

1. Slurry sealing and microsurfacing shall be in accordance with clause 918.

2. Special Restrictions: Guarantee period if not 2 years shall be stated on the Order.

3. Where stated on the Order a coloured surfacing shall be provided.

4. Preparation and masking requirements: Street furniture, road markings, and kerbs shall be masked unless otherwise stated on Order.

5. Minimum macrotexture depth at end of guarantee period shall be in accordance with Table NG 9/1 of MCHW Volume 2.

6. Maximum texture depth after 4 weeks trafficking: 3mm shall be required if stated on Order.

7. Maximum percentage decrease in macrotexture initially measured and at end of the guarantee period shall be 40%.

8. Class of area Defects (% area affected) acceptable shall be in accordance with Table NG 9/4 and NG 9/5 of MCHW Volume 2.

9. Class of linear Defects (metre per 100 metres) acceptable shall be in accordance with Table NG 9/3 of MCHW Volume 2.

10. Class of transverse regularity shall be in accordance with Table NG 9/4 and NG 9/5 of MCHW Volume 2.

11. Class of longitudinal regularity shall be in accordance with Table NG 9/6 and NG 9/7 of MCHW Volume 2.

APPENDIX 7/7 – SLURRY SURFACING INCORPORATING MICROSURFACING (CONTD)

SHEET 1 – Information to be provided the Operating Company in accordance with the other provisions of this Contract.

1 Location.

2 Traffic count.

3 Traffic speed, 85 percentile and Site speed limit.

4 Category of Site.

5 Description of existing surface.

6 Thickness of slurry surfacing.

7 Minimum declared PSV of coarse aggregate.

8 Maximum AAV of coarse aggregate.

9 Definition of colour required.

10 Surface finish required for footways (if not by transverse brushing).

APPENDIX 7/7 – SLURRY SURFACING INCORPORATING MICROSURFACING (CONTD)

SHEET 2 – Information to be provided by the Operating Company

The Operating Company shall provide the following information to the Overseeing Organisation, upon request:

1 A copy of:

(i) British Standard EN ISO 9001 Certificate showing at least the name of the company, the name of the certification body and the reference number and date of the Certificate, and

(ii) the relevant part of the company Quality Assurance document showing the appropriate scope (Slurry Surfacing and Sector Scheme) and limitations of the certification.

The Overseeing Organisation may wish to inspect all or any of the company's QA documentation as part of the vendor assessment system and may wish to satisfy itself on the nature of the QA systems of the Company's material suppliers.

2 Design proposal for slurry surfacing for each location and target binder content with tolerances.

3 Estimated Design life of the slurry surfacing for each location.

4 A copy of the Type Approval Installation Trial Certificate within the *Sector Scheme for Slurry Surfacing* for the proposed system together with its supporting data.

In the event of no Certificates being issued a statement of any previous applications on roads similar in site type to this Contract's Sites containing the same data as listed in NG Sample Appendix Sheet 3.

5 A method statement for each Site or group of similar Sites showing how it is proposed to carry out the work in conformance with the Specification.

6 Proposed source or sources of coarse aggregate together with statements of properties including target grading, declared PSV and AAV.

7 Proposed source or sources of fine aggregate including target grading and other constituents together with statements of properties.

8 Proposed binder together with data sheets and cohesivity data.

9 Proposals for traffic control and aftercare for each Site and reaction times for: carrying out remedial measures, sweeping, and Site visits with the Overseeing Organisation.

10 Contingency plans in the event of any breakdown of plant or failure of the slurry surfacing.

11 An 'As Built Manual' as specified in sub-clause 918.30.

12 If available, the following information shall be provided in order to assist the Overseeing Organisation to assess the technical merits of the design proposal:

(i) Test method for binder content,

(ii) Test for thickness of slurry surfacing,

(iii) Trafficability time, including method of test,

(iv) Wheel tracking test results at 45ºC or 60ºC or other suitable measure of the ability of the proposed system to resist deformation and flow,

(v) Water sensitivity test results from the test used by BBA/HAPAS *Thin Surfacing Guidelines Document* or from wet wheel tracking (whichever is available),

(vi) Permeability test carried out on the system, if it is claimed that the process seals the existing surface together with the method of test,

(vii) Accelerated ageing test results in accordance with the appropriate BBA/HAPAS test,

(viii) Bond test results using the BBA/HAPAS test on either a bituminous or a concrete substrate as appropriate to the Site or bond coat binder BBA/HAPAS Certificate,

(ix) Shaking abrasion test results,

(x) Slurry surfacing mix cohesion, and

(xi) The results of any other tests or other data this Operating Company considers would assist the Overseeing Organisation in assessing the technical merit of the Design proposal.

Binder Data Sheet – Appendix 7/7	Slurry Surfacing Incorporating Microsurfacing		
Manufacturer of Binder:	Product Name:		
Binder type:	Batch No:		
Binder source:			
Test	Binder as supplied to Site	Recovered binder in accordance with clause 955	Aged binder in accordance with clause 955
Penetration at 25°C 0,1 mm (100g and 5 secs)			
Penetration at 5°C 0,1 mm (200g and 60 secs)			
Vialit pendulum cohesion see clause 957 maximum peak value J/cm^2		#	#
Product identification test sub-clause 918.7. Complex shear (stiffness) modulus (G*) and phase angle (δ) data. See clause 956.		#	#
Other properties this Operating Company considers useful			
Weather limits – information from binder manufacturer: road or air temperatures, humidity, wind chill adjustment, etc.	Temperature Max: Temperature Min: Other:		

Where indicated with # the Operating Company shall attach a graphical output to this schedule. Shaded cells do not require data.

APPENDIX 7/9 – COLD-MILLING (PLANING) OF BITUMINOUS BOUND FLEXIBLE PAVEMENT

1 The location of areas to be cold-milled (planed) together with details of whether profile planing or constant depth planing is required shall be determined by the Operating Company in accordance with this Contract.

2 Areas to be cold-milled shall be swept in accordance with clause 709.11.

APPENDIX 7/12 - ARRESTER BEDS

Route	Location and RMM Inventory Number	Frequency

APPENDIX 7/13 – SAW-CUT AND SEAL BITUMINOUS OVERLAYS ON EXISTING JOINTED CONCRETE PAVEMENTS

1. The location of saw-cut and sealing of bituminous overlays on existing jointed concrete pavements shall be determined by the Operating Company in accordance with this Contract.

2. The tolerance on co-linearity of the crack initiation slot with the underlying joint or saw-cut shall be ± 5 mm for target overlay thickness less than 100 mm, and ± 10 mm for target overlay thickness 100 mm and greater.

APPENDIX 7/14 – PREPARATION OF JOINTED CONCRETE PAVEMENTS PRIOR TO OVERLAYING AND SAW-CUT AND SEAL OF THE BITUMINOUS OVERLAY

1 The location of the preparation of jointed concrete pavements prior to overlaying and saw–cut and sealing of the bituminous overlay shall be determined by the Operating Company in accordance with this Contract.

2. The treated surface shall be bond coated in accordance with Appendix 7/4 prior to overlaying.

APPENDIX 7/18 – SITE SPECIFIC DETAILS AND REQUIREMENTS FOR COLD RECYCLED BITUMEN BOUND MATERIAL

The Site specific details and requirements for cold recycled bitumen bound material shall be determined by the Operating Company in accordance with this Contract.

APPENDIX 7/22 –REPAIRS TO POTHOLES

1 General

1.1 Temporary repairs to small areas of pavement courses including holes for road stud sockets but excluding repairs to potholes on the Forth Road Bridge shall be carried out in accordance with clause 946 paragraphs 4, 6 and 7.

Standing water shall be removed before filling the hole.

2 Temporary Repair Materials

2.1 The Operating Company shall list in the following table proposed temporary repair materials suitable for use on the Unit.

The Operating Company shall select the most appropriate temporary repair material from the completed table.

Table of Materials for Temporary Repairs - Sheet 1

Reference Number	Temporary Repair material

Table of Materials for Temporary Repairs - Sheet 2

Column 1	**Column 2**	**Column 3**						
Locations On The Unit Where Temporary Repair Materials May Be Used.	**Climatic Conditions/ Seasonal/Time Conditions Where Temporary Repair Materials May Be Used.**	**Type of Repair**						
		Holes Less Than 0.5m^2 In Area	**Holes Exceeding 0.5m^2 But Not Exceeding 1.0m^2 In Area**	**Holes Greater Than 1.0m^2 In Area**	**Road Stud Sockets**	**Depressions Not Exceeding 0.5m^2 In Area**	**Depressions Exceeding 0.5m^2 But Not Exceeding 1.0m^2 In Area**	**Depressions Exceeding 1.0 m^2 In Area**

Notes for completion of Table of Materials for Temporary Repairs - Sheet 2

1. In column 1 the Operating Company shall state in which location the particular temporary repair material is suitable for use which can be generic for example 'all motorways' or specific for example 'Routes XXX'.

2. In column 2 the Operating Company shall state under what conditions the temporary repair material is suitable for use e.g. summer, winter, temperatures greater than x degrees, wet conditions, etc.

3. In column 3 the Operating Company shall insert the reference number of the temporary repair material.

APPENDIX 11/1: KERBS, FOOTWAYS AND PAVED AREAS

1 Details of Kerbs, Channels, Edgings, Footways, Paved areas shall be as shown on Standard Drawings Series 1100/01 contained in Schedule 9 Part 3.

2. Footways and Paved Areas shall be laid using materials and to thicknesses detailed in the Tables below, and as shown on Standard Drawings Series 1100/05 contained in Schedule 9 Part 3.

3. All materials shall be machine laid where possible. Where hand laid flexible surfacing to footways and cycleways shall comply with level tolerance requirements of British Standard 594987 Table 7.

4. Concrete flags shall comply with British Standard EN 1339 and Table 11/1D below. Surface levels of paved areas shall be to British Standard 7533-4: Tables B1 and B2.

5. Concrete paving blocks shall comply with British Standard EN 1338 and Table 11/1B below. Surface levels of paved areas shall be to British Standard 7533-3: Annex B.

Flexible Construction: Type F1 (New/replacement construction)

Pavement Layer	**Clause**	**Material**	**Binder Grade**	**Thickness (mm)**	**Special Requirements**
Surface course	909	6mm Dense Asphalt Concrete Surface Course	125	20	AC 6 dense surf 100/ 150 PSV 55 to BS EN 13108-1: 2006. Crushed rock aggregate excluding limestone.
Binder Course	906	Dense Binder Course Asphalt Concrete	125	40	AC 20 dense bin 100/150 to BS EN 13108-1: 2006. Crushed rock aggregate.
Sub base	803	Type 1	--	100	
Total thickness				160	

Flexible Construction: Type F2 (New/replacement construction)

Pavement Layer	Clause	Material	Binder Grade	Thickness (mm)	Special Requirements
Surface course	909	6mm Dense Asphalt Concrete Surface Course	125	20	AC 6 dense surf 100/ 150 PSV 55 to BS EN 13108-1: 2006. Crushed rock aggregate excluding limestone.
Binder Course	906	Dense Binder Course Asphalt Concrete	125	60	AC 20 dense bin 100/150 to BS EN 13108-1: 2006. Crushed rock aggregate.
Sub base	803	Type 1	--	150	
Total thickness				230	

Flexible Construction: Type F3 (Overlay existing paved area)

Pavement Layer	Clause	Material	Binder Grade	Thickness (mm)	Special Requirements
Surface course	909	6mm Dense Asphalt Concrete Surface Course	125	20	AC 6 dense surf 100/ 150 PSV 55 to BS EN 13108-1: 2006. Crushed rock aggregate excluding limestone.
Binder Course	906	Dense Binder Course Asphalt Concrete	125	40	AC 20 dense bin 100/150 to BS EN 13108-1: 2006. Crushed rock aggregate.
Regulating	907	Regulating course	--	Varies	
Total thickness				Varies	

Flexible Construction: Type F4 (Overlay existing paved area)

Pavement Layer	Clause	Material	Binder Grade	Thickness (mm)	Special Requirements
Surface course	909	6mm Dense Asphalt Concrete Surface Course	125	20	AC 6 dense surf 100/ 150 PSV 55 to BS EN 13108-1: 2006. Crushed rock aggregate excluding limestone.
Regulating	907	Regulating course	--	Varies: max 55mm	
Total thickness				Varies	

Concrete Construction: Type F5 (New/replacement construction)

Pavement Layer	Clause	Material	Binder Grade	Thickness (mm)	Special Requirements
Surface course	1001.2	Concrete	--	75	ST5 Concrete. Crimped surface finish.
Separation Membrane					
Sub base	803	Type 1	--	100	
Total thickness				175	

Concrete Construction: Type F6 (Overlay existing paved area)

Pavement Layer	**Clause**	**Material**	**Binder Grade**	**Thickness (mm)**	**Special Requirements**
Surface course	1001.2	Concrete	--	75	ST5 Concrete. Crimped surface finish.
Existing surface					
Total thickness				75	

Flagged Construction: Type F7 (New/replacement construction)

Layer	Clause	Material	Grade of Binder	Thickness (mm)	Special Requirements
Surface Course	1104	Concrete Flags	--	63	Plan Dimensions 450x450mm
Joints		Mortar			6mm wide. BS 7533 Part 4 Table 4
Laying Course	--	Mortar	--	25	BS 7533 Part 4 Table 3
Sub base	803	Type 1	--	100	
Total Pavement Thickness				188	

Flagged Construction: Type F8 (Overlay existing paved area)

Layer	Clause	Material	Grade of Binder	Thickness (mm)	Special Requirements
Surface Course	1104	Concrete Flags	--	63	Plan Dimensions 450x450mm
Joints		Mortar			6mm wide. BS 7533 Part 4 Table 4
Laying Course	--	Mortar	--	25	BS 7533 Part 4 Table 3
Existing surface					
Total Pavement Thickness				88	

Flagged Construction: Type F9 (New/replacement construction)

Layer	Clause	Material	Grade of Binder	Thickness (mm)	Special Requirements
Surface Course	--	Concrete Flags	--	70	Plan Dimensions 450x450mm.
Jointing		Sand			BS 7533 Part 4 Table 6
Laying Course	--	Sand	--	25 compacted thickness	BS 7533 Part 4 Table 5 Site Category III
Sub base	803	Type 1	--	150	
Total Pavement Thickness				245	

Flagged Construction: Type F10 (New/replacement construction)

Layer	Clause	Material	Grade of Binder	Thickness (mm)	Special Requirements
Surface Course	1104	Concrete Flags	--	70	Plan Dimensions 450x450mm.
Joints		Mortar			6mm wide. BS 7533 Part 4 Table 4
Laying Course	--	Mortar	--	25	BS 7533 Part 4 Table 3
Base	1030	Wet Lean Concrete	--	100	C8/10
Total Pavement Thickness				195	

Flagged Construction: Type F11 (New/replacement construction)

Layer	Clause	Material	Grade of Binder	Thickness (mm)	Special Requirements
Surface Course	1104	Concrete Flags	--	100	Plan Dimensions 450x450mm.
Joints		Mortar			6mm wide. BS 7533 Part 4 Table 4
Laying Course	--	Mortar	--	25	BS 7533 Part 4 Table 3
Sub base	803	Type 1	--	150	
Total Pavement Thickness				275	

Flagged Construction: Type F12 (New/replacement construction)

Layer	Clause	Material	Grade of Binder	Thickness (mm)	Special Requirements
Surface Course	1104	Concrete Flags	--	100	Plan Dimensions 450x450mm.
Joints		Mortar			6mm wide. BS 7533 Part 4 Table 4
Laying Course	--	Mortar	--	25	BS 7533 Part 4 Table 3
Sub base	803	Type 1	--	150	
Total Pavement Thickness				275	

Flagged Construction: Type F13 (Overlay existing paved area)

Layer	Clause	Material	Grade of Binder	Thickness (mm)	Special Requirements
Surface Course	1104	Concrete Flags	--	70	Plan Dimensions 450x450mm
Jointing		Sand			BS 7533 Part 4 Table 6
Laying Course	--	Sand	--	25 compacted thickness	BS 7533 Part 4 Table 5 Site Category III
Sub base	803	Type 1	--	varies	
Existing surface					
Total Pavement Thickness				Varies	

Flagged Construction: Type F14 (Overlay existing paved area)

Layer	Clause	Material	Grade of Binder	Thickness (mm)	Special Requirements
Surface Course	1104	Concrete Flags	--	100	Plan Dimensions 450x450mm
Joints		Mortar			6mm wide. BS 7533 Part 4 Table 4
Laying Course	--	Mortar	--	25	BS 7533 Part 4 Table 3
Sub base	803	Type 1	--	varies	
Existing surface					
Total Pavement Thickness				Varies	

Concrete Paving Block Construction: Type F15 (New/replacement construction)

Layer	Clause	Material	Grade of Binder	Thickness (mm)	Special Requirements
Surface Course		Concrete Paving blocks	--	60	Plan Dimensions 200x100mm
Jointing		Sand			BS 7533 Part 3 Table D4
Laying Course	--	Sand	--	50 compacted thickness	BS 7533 Part 3 Table D2 and D3 Site Category III
Sub base	803	Type 1	--	100	
Total Pavement Thickness				210	

Concrete Paving Block Construction: Type F16 (New/replacement construction)

Layer	Clause	Material	Grade of Binder	Thickness (mm)	Special Requirements
Surface Course		Concrete Paving blocks	--	80	Plan Dimensions 200x100mm
Jointing		Sand			BS 7533 Part 3 Table D4
Laying Course	--	Sand	--	50 compacted thickness	BS 7533 Part 3 Table D2 and D3 Site Category III
Sub base	803	Type 1	--	150	
Total Pavement Thickness				280	

Concrete Paving Block Construction: Type F17 (Overlay existing paved area)

Layer	Clause	Material	Grade of Binder	Thickness (mm)	Special Requirements
Surface Course		Concrete Paving blocks	--	60	Plan Dimensions 200x100mm
Jointing		Sand			BS 7533 Part 3 Table D4
Laying Course	--	Sand	--	30 compacted thickness	BS 7533 Part 3 Table D2 and D3 Site Category III
Existing Surface					
Total Pavement Thickness				90	

Flagged Construction (Tactile): Type F18 (New/replacement construction)

Layer	Clause	Material	Grade of Binder	Thickness (mm)	Special Requirements
Surface Course	1104	Concrete Flags: Tactile Paving	--	70	Tactile Paving to DD CEN/TS 15209:2008. Pattern and colour to be agreed. Plan Dimensions 450x450mm
Jointing		Sand			BS 7533 Part 4 Table 6
Laying Course	--	Sand	--	25 compacted thickness	BS 7533 Part 4 Table 5 Site Category III
Sub base	803	Type 1	--	150	
Total Pavement Thickness				245	

Flagged Construction (Tactile): Type F19 (Overlay existing paved area)

Layer	Clause	Material	Grade of Binder	Thickness (mm)	Special Requirements
Surface Course	1104	Concrete Flags: Tactile Paving	--	70	Tactile Paving to DD CEN/TS 15209:2008. Pattern and colour to be agreed. Plan Dimensions 450x450mm
Jointing		Sand			BS 7533 Part 4 Table 6
Laying Course	--	Sand	--	25 compacted thickness	BS 7533 Part 4 Table 5 Site Category III
Existing surface					
Total Pavement Thickness				95	

Concrete Ramped Footway Construction: Type F20 (New/replacement construction)

Layer	Clause	Material	Binder Grade	Thickness (mm)	Special Requirements
Surface course	1001.2	Concrete	--	75	C20 Concrete. Crimped surface finish. See drawing 1100/05/055-064 for layout
Sub base	803	Type 1	--	150	
Total thicknes s				225	

Flexible Ramped Construction: Type F21 (New/replacement construction)

Layer	Clause	Material	Binder Grade	Thickness (mm)	Special Requirements
Surface course	909	6mm Dense Asphalt Concrete Surface Course	125	25	AC 6 dense surf 100/ 150 PSV 55 to BS EN 13108-1: 2006. Crushed rock aggregate excluding limestone. See drawing 1100/05/055-064 for layout
Binder Course	906	Dense Binder Course Asphalt Concrete	125	60	AC 20 dense bin 100/150 to BS EN 13108-1: 2006. Crushed rock aggregate.
Sub base	803	Type 1	--	150	
Total thicknes s				235	

Concrete Footway Construction: Type F22 (New/replacement construction)

Layer	Clause	Material	Binder Grade	Thickness (mm)	Special Requirements
Surface course	1001.2	Concrete	--	100	C20 Concrete. Crimped surface finish. See drawing 1100/05/055-064 for layout
Sub base	803	Type 1	--	100	
Total thicknes s				200	

Concrete Footway Construction: Type F23 (Overlay existing paved area)

Layer	Clause	Material	Binder Grade	Thickness (mm)	Special Requirements
Surface course	1001.2	Concrete	--	100	C20 Concrete. Crimped surface finish.
Sub base	803	Type 1	--	Varies	
Existing Surface					
Total thicknes s				Varies	

Concrete Paving Block Construction: Type F24 (Overlay existing paved area)

Layer	Clause	Material	Grade of Binder	Thickness (mm)	Special Requirements
Surface Course		Concrete Paving blocks	--	80	Plan Dimensions 200x100mm
Jointing		Sand			BS 7533 Part 3 Table D4
Laying Course	--	Sand	--	50 compacted thickness	BS 7533 Part 3 Table D2 and D3 Site Category III
Sub base	803	Type 1	--	Varies: max 100mm	
Existing Surface					
Total Pavement Thickness				Varies	

Concrete Paving Block Construction: Type F25 (New/replacement construction)

Layer	Clause	Material	Grade of Binder	Thickness (mm)	Special Requirements
Surface Course		Concrete Paving blocks	--	80	Plan Dimensions 200x100mm
Jointing		Sand			BS 7533 Part 3 Table D4
Laying Course	--	Sand	--	30 compacted thickness	BS 7533 Part 3 Table D2 and D3 Site Category III
Base	1030	Wet Lean Concrete	--	100	C8/10
Sub base	803	Type 1	--	150	
Existing Surface					
Total Pavement Thickness				360	

Table 11/1A General Requirements for Permitted Construction Materials	
Clause	Requirement
801.7	All materials used within 450mm of the pavement finished surface shall not be frost susceptible
802.4	Material up to 225mm compacted thickness shall be spread in one layer
901.2 and 942.5	In addition to the requirements of clauses 901.2 and 942.5 the coarse aggregate in all base, binder course and surface course materials shall be crushed rock
920.1	All Bituminous surfaces shall be treated with either a tack coat or bond coat prior to overlay. The use of a tack coat or bond coat shall be as stated in Appendix 7/4

Table 11/1B Particular Requirements for Concrete Blocks: British Standard **EN 1338**	
Requirement	Specification
Shape	Rectangular
Dimensions	200 x 100mm in plan. 60mm or 80mm thick as specified
Colour	As instructed
Weathering & Abrasion Resistance	Class 3
Slip/skid resistance	Minimum pendulum value 45
Characteristic tensile splitting strength	>3.6MPa
Minimum Load at Failure	250N/mm

Table 11/1C General Requirements for Block Paving	
No	Requirement
1	Blocks shall be laid in a 45 degree herringbone pattern, unless otherwise instructed. Block paver layout details shall be as shown in the drawings
2	Formation to footways to be treated with an appropriate weed killer in accordance with manufacturer's instructions prior to construction.
3	Infill blocks shall be cut using a shielded water based diamond tipped cutter to remove dust. All cut edges to be lightly chamfered to match adjoining edges. Blocks of less than one third full size should not be used. Splitting of blocks is not permitted.
4	All paving shall be jointed with kiln dried jointing sand brushed into the joints before and between two passes with a rubber soled vibrating plate. Repeat at regular intervals thereafter whenever necessary to ensure that joints remain full.
5	All fully sanded joints in flexible paving shall be sealed with an appropriate PVA joint stabilising fluid or applied in accordance with the manufacturer's instructions.

Table 11/1D Particular Requirements for Concrete Flags: British Standard **EN 1339**	
Requirement	Specification
Shape	Rectangular or square
Dimensions	As specified
Colour	As instructed
Water Absorption	Class 2
Slip/skid resistance	Minimum pendulum value 45
Characteristic bending strength	Class 3

APPENDIX 11/2 – ACCESS STEPS

Details of access steps to feeder pillars, communications, cabinets, traffic counter cabinets, Ice Prediction sites and other monitored apparatus shall be as shown on Standard Drawing Number MCX 0138 (modified) contained in Schedule 9 Part 3.

APPENDIX 12/1 – TRAFFIC SIGNS: GENERAL

1 General

1.1 Sign schedules for Schemes which detail the individual requirements for sign assemblies shall be prepared by the Operating Company in accordance with the other provisions of this Contract. The schedules shall include:

(i) sign face details, dimensions and location,

(ii) mounting height,

(iii) post details, including details for passively safe posts, and

(iv) foundation details.

2. Sign faces

2.1 Sign faces shall be made using Class RA2 material to British Standard EN 12899-1 or microprismatic material to British Standard 8408 2005 as determined by the Operating Company in accordance with this Contract.

2.2 Where determined by the Operating Company in accordance with this Contract, sign faces shall be protected with dew resistant sheeting.

3 Foundations

3.1 Details of foundations for sign posts and signal posts shall be shown on drawings numbers 1200/10/1 and 1200/10/2 in Schedule 9 Part 3.

4 Round or Rectangular Sign Posts

4.1 Base Plates

Each post shall have a base plate and this shall be fixed to the post in order to prevent any rotation of the post.

It shall be of square section with the side dimensions being at least twice the width of the post.

4.2 Base Housings

The minimum diameter of base housings on tubular posts shall be 168 mm.

Rectangular posts requiring an electrical supply shall be fitted with an integral flush fitting door above ground level.

Detachable root boxes are not to be used.

The internal base housing shall:

(i) contain a baseboard manufactured from marine plywood or hardwood with a minimum thickness of 15 mm and minimum dimensions of 100 x 380 mm,

(ii) be mounted securely to the back of the compartment on which the electrical equipment shall be mounted,

(iii) have a minimum distance of 100 mm from the face of the baseboard to the inside of the front of the housing,

(iv) have a brass or stainless steel earthing screw or stud 8 mm diameter complete with two brass washers and a brass nut and locknut in a suitable and easily accessible position,

(v) have a door aperture measuring not less than 110 x 400 mm, and

(vi) be positioned such that the lower edge of the door is not less than 300 mm above ground level, once installed.

4.3 End Caps

All round or rectangular posts shall be supplied complete with plastic end caps. End caps shall be shaped to shed water to the outside of the post and shall be the same colour as the post.

4.4 Protective Finish

The post shall be covered in bitumen in accordance with British Standard EN 40-5 both outside and inside the post up to 150 mm above proposed ground level.

5 Passively Safe Sign Posts

All passively safe sign posts shall be designed and installed accordance with British Standard EN 12767: 2007.

6 Permanent Bollards

Internally illuminated bollards shall be base illuminated.

7 Sign Fix Clips

Sign fix clips shall be made of stainless steel.

8 Ducting

Ducting installed through the foundations of posts into which electrical equipment shall be installed shall be 50 mm diameter uPVC street lighting duct with a wall thickness of 5 mm.

9 Identification Numbers

9.1 Identification numbers shall be as follows:

(i) Each sign shall be identified by a unique system of letters and numbers for maintenance and inspection purposes. The number shall be fixed to the sign by an appropriate adhesive,

(ii) Letters and numbers shall be provided on both sides of sign located in the central reservation. On all other signs the numbers shall face oncoming traffic,

(iii) Letters and numbers shall be black on a yellow background with characters 75 mm high at a minimum height of 1.5 metres and a maximum height of 2.5 metres above ground level, and

(iv) Letters and numbers shall be screen printed onto reflective self adhesive vinyl mounted on 3 mm thick Foamex.

APPENDIX 12/2 – TRAFFIC SIGNS: MARKER POSTS

1 Hazard Marker Posts

1.1 Hazard marker posts shall be capable of being overrun by vehicles in order that they shall deflect and spring back to an upright position without shattering in all weather conditions and with little or no vehicular damage.

1.2 Hazard marker posts shall be fitted with anti-removal tabs below the ground.

1.3 The reflectors shall be of retroreflective sheet material to comply with Diagram 561 of *Traffic Signs Regulations and General Directions 2002*.

1.4 The retroreflective sheeting shall be protected from damage from over-running vehicles by raised edges or other acceptable methods.

1.5 The hazard marker post shall have the main body self-coloured black with a highly visible weather resistant white band to the sizes quoted in paragraph 16.1 in Chapter 4 of the *Traffic Signs Manual*.

1.6 The top of the hazard marker post shall be installed in order that the top of the post is 750 mm-1000 mm above ground level.

2 Verge Hazard Marker Posts

2.1 Verge hazard marker posts shall be as shown on drawing numbers 1200/08/001 and 002 and are defined as follows:

(i) Type VM1 – stake type fixing which shall include a timber pressure impregnated stake and automatic stake locking mechanism,

(ii) Type VM2A – Extended base fixing backfilled with excavated material, and

(iii) Type VM2B – Extended base fixing backfilled with concrete type ST2.

2.2 Verge hazard marker posts shall be constructed of material resistant to damage and vandalism and maintenance free.

The posts shall have two integrally moulded shatterproof reflectors angled to give maximum visibility to traffic travelling from either direction on bends and a high visibility band integrally moulded into its body minimum 155 mm.

2.3 Verge hazard marker post shall be installed in accordance with the manufacturer's instructions.

3 Motorway Distance Marker Posts

3.1 Motorway distance marker posts shall be as specified in the Manual of Contract Documents for Highways Works Volume 3 Highway Construction Details Drawing E Series.

4 Edge of Carriageway Hazard Markers

4.1 Edge of carriageway hazard markers Type ECB1 shall be as shown on drawing number 1200/09/001 contained in Schedule 9 Part 3.

4.2 The edge of carriageway marker shall be installed in accordance with the manufacture's written instructions.

4.3 A 150 mm retroreflective red and white band shall be attached to the marker.

APPENDIX 12/3 – TRAFFIC SIGNS: ROAD MARKINGS AND STUDS

1 Road Markings

1.1 The colour location and material type for permanent or temporary road markings shall be determined by the Operating Company in accordance with this Contract.

1.2 Ribbed road markings shall be formed of hot applied thermoplastic formulated to allow the formation of transverse ribs.

The transverse ribs shall not be less than 8 mm and not greater than 10 mm high and shall be at 500 mm spacing except on slip roads where the spacing shall be reduced to 250 mm.

1.3 The requirement for drainage gaps in raised rib markings shall be determined by the Operating Company in accordance with this Contract.

1.4 All road markings shall provide a skid resistance level of 55.

1.5 Where existing road markings are required to be covered over the cover application shall comply with British Standard EN 60832:1997.

2 Road Studs

2.1 General Requirements

Road studs shall be placed in new sockets with a clearance of at least 300 mm from any existing sockets.

Refurbished road stud shoes may be re-used but fitted with new inserts.

2.2 Road studs with red and green reflectors shall be uni-directional. Road studs with white shall be bi-directional. Road studs with amber reflectors shall be of the corner-cube reflection type.

2.3 Temporary road studs shall be either hot melt adhesive type or self adhesive type.

APPENDIX 12/5 – TRAFFIC SIGNS: TRAFFIC SIGNALS

1 Temporary Traffic Signals

1.1 Temporary traffic signals used to control alternate one-way working shall comply with current versions of *Department of Transport specifications TR2502A* for portable traffic signal control equipment and TR2504A for vehicle detection equipment. The signals shall be located and operated in accordance with Chapter 8 of the *Traffic Signs Manual.*

1.2 The Operating Company shall obtain the prior written consent of the Overseeing Organisation for multiphase temporary traffic signals.

1.3 The Operating Company shall provide to the Overseeing Organisation a drawing to a scale of 1:500 with the position of the signals indicated by a dot and an arrow from the dot indicating the direction of the lights and a key to symbols used shall be shown.

The position of signals shall be accurate to within 2 metres.

APPENDIX 13/2 – TYPICAL LIGHTING COLUMN AND BRACKET DATASHEET 1

Name of manufacturer

Column Reference No	
Revision No	
Date	

NAME OF CONTRACT

PART A General

Column nominal height	(m)		
Column material			
Material design strength	(N/mm²)		
No of door openings			
Door opening size – Height	(mm)		
Width	(mm)		
Cross-section of base compartment	Height (mm)	Width (mm)	Depth (mm)

Door Opening		
	Any	
Manufacturer's drawing ref no		

Corrosion protection (steel columns only) – basic system type sub-clauses (1911.9 and 1911.10)	
Reference Wind Velocity $V_{ref,o}$ as defined in BS EN 40-3-1:2000	m/s

Additional sacrificial steel thickness above that needed in the Design from the bottom of the column to at least 250 mm above the anticipated ground level	(mm)

PART B Foundation Data

Planted base	Planting depth	(metres)

	Standard Soil Type Factor G		
	630	390	230
Diameter of concrete surround (if any)			

	Bolt hole centres	Bolt Hole diameter	Design load/bolt
Flange plate	(MM)	(mm)	(N)

Relevant forces and moments at ground level	
Line of action of max moment relating to door opening	

NOTE For flange plates with slotted holes a diagram shall be included with the data sheet

APPENDIX 13/2 CONTINUED – TYPICAL LIGHTING COLUMN AND BRACKET DATASHEET 2

LUMINAIRE MAXIMUM CHARACTERISTICS

PART C

Acceptable Luminaires

	Terrain Categories as defined in BS EN 40-3-1:2000				
	I	II	III	IV	
Luminaire Maximum Weight (kg)	Maximum Windage Area (m²) for terrain categories as defined in BS EN 40-3-1:2000				

Post Top Column

Luminaire Connection							
Diameter	Length						

Single Arm Bracket Column

Luminaire lever arm (mm)	
Due to weight of luminaire	Due to Windage on luminaire

Bracket projection (metre)	Reference Number	Drawing Number	Material		Luminaire Fixing Angle	Luminaire Connection		Luminaire Maximum Wt (kg)	Maximum Windage Area (m²) for terrain categories as defined in BS EN 40-3-1:2000				
			Grade	Design Strength (N/mm²)		Diameter (mm)	Length (mm)						

Double Arm Bracket Column

Luminaire lever arm (mm)	
Due to weight of luminaire	Due to Windage on luminaire

Bracket projection (metre)	Reference Number	Drawing Number	Material		Luminaire Fixing Angle	Luminaire Connection		Luminaire Maximum Weight (kg)	Maximum Windage Area (m²) for terrain categories as defined in BS EN 40-3-1				
			Grade	Design Strength (N/mm²)		Diameter (mm)	Length (mm)						

PART D CERTIFICATION

It is certified that the information given in this data sheet has been obtained in accordance with Departmental Standard BD 94/07 (DMRB 2.2.1) and the Specifications.

Signed on Behalf of the Operating Company _____Date_____

Name (in Block Capitals): _____

APPENDIX 13/3 – INSTRUCTIONS FOR COMPLETION OF LIGHTING COLUMN AND BRACKET DATASHEETS

1 When information is not required a dash shall be inserted in the appropriate boxes.

2 Where a data sheet is amended it shall be given a new revision number with a date.

3 The revision number shall be consecutive letters of the alphabet commencing with 'A'.

4 The date of the revision shall agree with the date of the Operating Company Representative's signature.

5 The column may be aluminium, fibre glass or galvanised steel.

6 The material design strength shall be the minimum specified in the Design.

Where more than one material is used values for all materials shall be given.

7 All relevant entries shall be made on the data sheet before the document is certified by the Operating Company.

8 The column nominal height shall be selected from clauses 2 or 3 of BS EN 40-2 as appropriate.

The height shall also be dependent upon local factors, for example overhead power lines, in accordance with the requirements of BS 7671:2008.

9 The number of door openings shall agree with the manufacturer's drawing.

10 The cross-section of the base compartment shall be indicated by a dimensioned diagram/sketch.

11 The acceptable positions of bracket arms relative to the door position shall be indicated on the diagram.

Where all positions are acceptable the box noted 'ANY' shall be ticked.

12 Where concrete is necessary around the planted base in accordance with clauses 1305.3 and 1305.4 the minimum diameter shall be entered.

13 For flange bases all forces and moments necessary for the Design of the foundations shall be obtained in writing from the manufacturer.

14 The corrosion protection system used on the column when new shall be recorded.

Where additional steel is provided for sacrificial purposes the amount shall also be recorded.

15 The signs and attachments surface area, eccentricity from the centreline of the column to the centre of area of the sign and height above ground level to the centre of area of the sign shall be stated.

16 The luminaire lever arm's weight and maximum windage area quoted shall be based on the most adverse loading on the bracket when it is attached to any of the columns quoted in the compatible column sections.

Note: The luminaire lever arms shall be the horizontal distances from the centre of gravity of the luminaire and if applicable, the centroid of the windage surface area to the end of the bracket joint.

APPENDIX 17/1 – SCHEDULE FOR THE SPECIFICATION OF DESIGNED CONCRETE

SHEET 1 – Structural concrete above ground

Requirement	Schedule		
Designed Concrete Reference	STR1	STR2	
Intended Working Life of Structure	120	120	
Nominal Cover to Reinforcement	#	#	
Applicable Exposure Classes (Excluding DC-class)	#	#	
DC-class (where appropriate)	N/A	N/A	
Compressive Strength Class of Concrete	C32/40	C40/50	
Minimum Cement Content (kg/m^3)	360	380	
Maximum Free Water/Cement Ratio	0.4	0.4	
Required Group or Type and Class of Cement or Combination (where a DC-class has not been specified)	Group 5 IIB-V IIIA	Group 4 IIA-V IIB-S	
Maximum Aggregate Size, mm	20	20	
Chloride Content Class	Cl0,30[b]	Cl0,10[a] Cl0,30[b]	
For Lightweight Concrete, the Density Class or Target Density			
For Heavyweight Concrete, the Target Density			
Consistence Class	#	#	
Special Type or Class of Cement or Combination			
Required Source/Special Type of Aggregate	Freeze/thaw resisting aggregates	Freeze/thaw resisting aggregates	
Maximum Cement Content (kg/m^3) [See NG 1704.7]	550	550	
Required Admixture	#	#	
Air Entrainment Required [YES/NO]	3.5% min	No	
Minimum or Maximum Temperature of Fresh Concrete ˚C	5/30	5/30	
Sampling and Testing Identity testing Type of test	##	##	

Requirement	Schedule		
Testing rate			
Other Requirements UKAS or equivalent third party product conformity certification [YES/NO]	Yes	Yes	

The Operating Company shall determine this detail when selecting from the above table and inform the Overseeing Organisation

Cross-reference shall be made to Appendix 1/5 and 1/6 as appropriate

a Prestressed or heat cured concrete

b Concrete with reinforcement or embedded metal

Note Designed concrete reference STR 1 shall be used for all reinforced concrete above foundation level

Designed concrete reference STR 2 may be used for reinforced concrete above ground level only with the prior approval of the Overseeing Organisation.

Designed concrete reference STR 2 may be used for prestressed or heat cured concrete.

In line with Appendix 17/70, the Operating Company may develop an alternative designed concrete in accordance with British Standard 8500-1 and 2 and this Specification and submit to the Overseeing Organisation for written consent.

SHEET 2 – Structural concrete in foundations

Requirement	Schedule				
Concrete Reference	FOU 1	FOU 2	FOU 3	FOU 4	FOU 5
Intended Working Life of Structure	120	120	120	120	120
Structural Performance Level	High	High	High	High	High
Nominal Cover to Reinforcement	#	#	#	#	#
DC-class (where appropriate)	DC-1	DC-2 DC-2z DC-3[b] DC-3-z	DC-3*[b] DC-3 **[b] DC-4[b] DC4z	DC-3[a] DC-4[a] DC4*[b] DC-4**[b] DC4-m[a]	DC-4m[b] DC-4m*[b] DC-4m**[b]
Compressive Strength Class of Concrete	C32/40	C32/40	C32/40	C32/40	C32/40
Minimum Cement or Combination Content (kg/m^3)	360	380	360	380	360
Maximum Free Water/Cement Ratio	0.4	0.4	0.4	0.4	0.4
Required Group or Type and Class of Cement or Combination	IIB-V+SR IIIA+SR	IIB-V+SR IIIA+SR	IVB-V	IVB-V	IIIB+SR
Maximum Aggregate Size	20 mm	20 mm	20 mm	20 mm	20 mm
Chloride Content Class	Cl 0,30	Cl 0,30	Cl 0,30	Cl 0,30	Cl 0,20
For Lightweight Concrete, the Density Class or Target Density					
For Heavyweight Concrete, the Target Density					
Consistence Class	#	#	#	#	#
Special Type or Class of Cement or Combination	#	#	#	#	#

Requirement	Schedule				
Required Source/Special Type of Aggregate	#	#	#	#	#
Maximum Cement Content (kg/m^3) [See NG 1704.7]	380	380	400	420	420
Required Admixture					
Air Entrainment Required [YES/NO]	No	No	No	No	No
Minimum or Maximum Temperature of Fresh Concrete ˚C	5/30	5/30	5/30	5/30	5/30

Requirement	Schedule				
Sampling and Testing Identity testing Type of test Testing rate	##	##	##	##	##
Other Requirements UKAS or equivalent third party product conformity certification [YES/NO]	Yes	Yes	Yes	Yes	Yes

The Operating Company shall determine this detail when selecting from the above table and inform the Overseeing Organisation.

Cross-reference shall be made to Appendix 1/5 and 1/6 as appropriate.

a Aggregate carbonate range A, DC-3, DC-4 and DC-4m to use only Combination CIIIB+SR

b Aggregate carbonate range B, C only

Note Designed concretes included in this Appendix are for use at the discretion of the Operating Company. In line with Appendix 17/70, the Operating Company may develop an alternative designed concrete in accordance with British Standard 8500-1 and 2 and this Specification and submit to the Overseeing Organisation for written consent.

APPENDIX 17/2 – CONCRETE – IMPREGNATION SCHEDULE

Impregnation Treatment

Structure Reference	Drawing Reference	Area Definition Impregnation Treatment (Note 1)
To be completed by the Operating Company	To be completed by the Operating Company	Piers, columns, crossheads and abutments
		Bearing shelves, ballast walls and deck ends
		Structures in marine environments and columns and soffits over brackish water
		Concrete parapets and parapet plinths
		Deck beams and soffits
		Wing walls
		Retaining walls
		'M' beams

Notes

1 This list shall be a guide for selection by the Operating Company but shall not be construed as exhaustive.

Other area definitions shall be inserted by the Operating Company.

2. Surface treatments shall be applied in accordance with BD 43 of the DMRB.

3. Where an alternative to silane impregnation shall be available the Operating Company may submit proposals for its use to the Overseeing Organisation for prior written consent. Any alternative shall not be used until prior written consent has been obtained.

4. The Overseeing Organisation shall wherever possible not later than four Working Days after receipt of the Operating Company's submission:

(i) accept the submission in writing,

(ii) reject the submission in writing with reasons, and

(iii) request the Operating Company to supply further information.

If action (ii) is taken by the Overseeing Organisation, the period of approval of four Working Days shall recommence on receipt of a redrafted submission. If action (iii) is taken by the Overseeing Organisation, a minimum period of approval of four Working Days shall commence on receipt of the additional information.

APPENDIX 17/3 – CONCRETE – SURFACE FINISHES

1. Patterned Profile Finishes

1.1 Unless otherwise instructed by the Overseeing Organisation where a patterned profile finish is required it shall comprise 40 millimetres deep vertical rebates, 200 millimetres wide at the inner most face of the rebate tapering to 250 millimetres wide at the outermost face of the rebate.

APPENDIX 17/4 – CONCRETE – GENERAL

1 Conformity and Accreditation

1.1 The Operating Company shall provide evidence that the concrete supplier is certified by UKAS and conforms to QSRMC Quality and Product Conformity Regulations British Standard EN ISO 9001:2000.

1.2 The Operating Company shall provide evidence that all material test laboratories to be used are UKAS certified.

1.3 When the mix proportions have been consented to by the Overseeing Organisation, no variations shall be made by the Operating Company in the manufacture, supply, mix proportions or method of mixing of the material without prior written consent.

1.4 In-situ testing shall be carried out to the satisfaction of the Overseeing Organisation and the Operating Company shall submit certified copies of the results to the Overseeing Organisation no later than 1 day after the data was recorded.

1.5 The Operating Company shall obtain laboratory tests results, no later than 3 days after the due test date.

1.6 The mixer and method of mixing the samples shall be the same as that to be used throughout the work.

2 Materials

2.1 The content of equivalent sodium oxide in the mix shall be restricted or non-reactive aggregates shall be used, as defined in the relevant clauses of Series 1700.

2.2 The total chloride ion content of the materials shall not exceed 0.3 per cent of the mass of cement. Any chloride or admixtures containing chlorides shall not be used.

2.3 The aggregates shall be well graded with the maximum size not exceeding that specified in Appendix 17/1, and complying with clause 1702.2 and 1705.

2.4 Elongated aggregates of a fraction greater than the maximum aggregate size shall not be used.

3 Delivery of Materials

3.1 The Operating Company shall obtain with each batch or part of a batch of the material used in relation to the concreting work, Certificates furnished by the formulator or its agent stating:

(i) Formulator's name and address,

(ii) Formulator's agent's name and address where applicable,

(iii) Material identification,

(iv) Batch reference number, size of batch and number of containers in the delivery order,

(v) Date of manufacture, and

(vi) Evidence that the chloride contents are less than specified in clause 2.2.

4 Sampling

4.1 Each batch of material delivered to Site shall be tested at random from one or more containers of the same batch in accordance with British Standard EN 12350-1:2009.

5 Placing and Curing

5.1 The standing time between placements shall not be greater than 30 minutes unless a construction joint is formed in accordance with clause 1710.

5.2 When concrete has been in place for more than 30 minutes, a construction joint shall be formed and no further concrete shall be placed against it for a further 20 hours. In addition to the requirements of clause 1710, the construction joint surface shall be saturated for a minimum of 2 hours immediately before any further concrete is placed against it.

5.3 Where concrete is placed in layers, compaction shall extend below the top layer and into the one underneath by at least 100 mm. External compaction may also be adopted.

5.4 Immediately after placing and for 14 days thereafter, concrete shall be protected against harmful effects of weather including rapid temperature changes, frost and from drying out. The methods of protection used must in all cases be subject to the prior written consent of the Overseeing Organisation. Proprietary curing membranes shall not be used.

APPENDIX 17/5 – CONCRETE – BURIED CONCRETE

The following information shall be completed by the Operating Company for each Structure, or group of Structures, and applies only for buried concrete or partially buried concrete, i.e. with one or more faces in contact with natural or disturbed ground or imported backfill.

Structure Name or Location (A separate appendix should be provided for each Structure or location with varying conditions or Design constraints – identical conditions and constraints may be grouped together in one appendix)	
Aggressive Chemical Environment for Concrete Class for Site (derived from Table A.2 of BS 8500-1)	
Structural Performance Level (High, normal or low) (derived from Table 3 of BS 8500-1)	
Design Chemical Class (derived from the Aggressive Chemical Environment for Concrete class determined by assessment of ground conditions together with the Structural Performance Level and the concrete section thickness and adjusted as necessary by reference to the footnotes to Table A.4 of BS 8500-1 and NG 1704.11(i) for increase in concrete quality when used as an Additional Protective Measure, specification of 'starred' or 'double' starred' DC classes)	
Other Requirements and Design Constraints (eg Limitations on drainage or Additional Protective Measures required)	

APPENDIX 17/70 – SCHEDULE FOR THE SPECIFICATION OF AN ALTERNATIVE DESIGNED CONCRETE

	Schedule		
Reference	RC30(B) Below Ground	RC30(A) Above Ground	
Intended Working Life of Structure (years)	120	120	
Nominal Cover to Reinforcement (mm)	#	#	
Applicable Exposure Classes		#	
DC-class	DC-1[$]		
Compressive Strength Class of Concrete	C25/30	C25/30	
Minimum Cement Content (kg/m^3)	280	280	
Maximum Free Water/Cement Ratio	0.6	0.6	
Required Group or Type and Class of Cement or Combination (where a DC-class has not been specified)	#	Group 4, 5, 6	
Maximum Aggregate Size, (mm)	20	20	
Chloride Content Class	Cl 0,30	Cl 0,30	
For Lightweight Concrete, the Density Class or Target Density			
For Heavyweight Concrete, the Target Density			
Consistence Class	#	#	
Special Type or Class of Cement or Combination			
Required Source/Special Type of Aggregate			
Maximum Cement Content (kg/m^3) [See NG 1704.7]	300	300	
Required Admixture			
Air Entrainment Required [YES/NO]	NO	NO	
Minimum / Maximum Temperature of Fresh Concrete (˚C)	5/30	5/30	
Sampling and Testing	##	##	
Other Requirements	#	#	

#	The Operating Company shall determine this detail when selecting from the above table and inform the Overseeing Organisation.
##	Cross-reference shall be made to Appendix 1/5 and 1/6 as appropriate.

Notes
1. Structural performance level shall be 'High'.
2. See tables A2, A4 and A5 of BS 8500-1 and BRE Special Digest 1.
3. RC30 above ground shall comply with Table A6 of British Standard 8500-1

APPENDIX 18/70 – WELD REPAIRS TO ORTHOTROPIC DECKS

1. Acceptance criteria for existing Defects on steel orthotropic decks shall be established by a civil or structural engineer with experience in welding of existing plated steel structures, or through written consultation with same and shall take account of the age of the deck and materials used during manufacture. Qualifications for relevant welding, coordination and testing personnel shall be as required in British Standard EN ISO 3834-5:2005 for the comprehensive quality requirement level.

2. Where cracks in the deck plate, deck plate stiffeners or welds are identified their location and extent shall be recorded. The extent of cracks shall be clearly marked, logged and photographed.

3. Deck plate and welds shall be inspected visually and weld defects sought further by Magnetic Particle Inspection to British Standard 6072 using an A.C. yoke by a person qualified to at least PCN level 2. The procuring specification shall define the extent and basis of MPI inspection frequency.

4. Ultrasonic inspection d may be used to establish the extent and depth of defects encountered or establish other characteristics such as fusion. The ultrasonic inspection shall be carried out using the methods recommended in British Standard EN 583.

5. Welders shall be qualified for the relevant procedure in the proposed location in accordance with British Standard EN 287: Part 1. Written weld and repair procedures shall be submitted as part of the Contractor's method statement for on-site welding to British Standard EN 1011-1 and British Standard EN 1011-2. Welders must be in possession of the relevant procedure when carrying out the work.

6. Weld procedures shall be subject to shop application trials using, where possible, samples of plate taken from the structure at relevant locations. All laboratory tests required shall be defined in the trial procedure specification.

7. The Operating Company shall prepare procedures for the repair of Defects based on the following, which assumes a deck plate thickness of 12.0-12.7mm:

   (i) An assessment of the likely depth of the defect shall be made. If less than 3mm deep, it shall be removed by shallow dishing in an approved manner and direction with a disc grinder and inspected using MPI. No further repair is necessary. If, however, during this process, it emerges that the defect has depth greater than 3mm, dishing should be stopped,

   (ii) Where the Defect is 3mm or greater in depth, excavate using a disc or burr grinder as appropriate in increments of 2mm depth. No length in excess of 250mm or 25% of the total length of Defect, whichever is the greater, shall be ground out at any one time. Grinding from one side shall be limited to 75% of the plate thickness,

   (iii) Ensure that the excavation has smooth sides and forms a weld preparation,

   (iv) Examine the excavation by MPI to ensure complete removal of the Defect,

   (v) Immediately prior to welding, ensure that the excavation is dry. If drying is required this shall be carried out using a suitable gas torch or other acceptable means. The heat from the torch shall not be concentrated in one spot, but evenly distributed over the length of the excavation and applied for sufficient time to dispel all moisture including that generated by the heating flame itself,

   (vi) Undertake repairs in accordance with an appropriate weld procedure using manual metal arc welding. Electrode and repair procedure selection shall be determined bearing in mind the provenance of the existing plate and any existing

weld composition by an experienced welding specialist qualified to at least PCN level 2. Identification shall be provided to enable each weld to be traced to the welder or operator who made it,

(vii) Visually inspect the repaired area to ensure the minimum acceptance criteria are achieved, and

(viii) Undertake MPI and ultrasonic testing over 100% of the repair area, after a minimum period of 48 hours, has elapsed to ensure the minimum acceptance criteria are achieved.

APPENDIX 19/1 – (SPECIFICATION FOR HIGHWAY WORKS) FORM HA/P1 (NEW WORKS) PAINT SYSTEM SHEET

1. CONTRACT TITLE: STRUCTURE NO: GRID REF:	
2. DATE OF ISSUE OF DOCUMENTS TO TENDERERS	
3. ENVIRONMENT AND ACCESSIBILITY:	
4. REQUIRED DURABILITY OF SYSTEM: NO MAINTENANCE: up to …….. YEARS MINOR MAINTENANCE: from …… YEARS MAJOR MAINTENANCE: after …… YEARS (Ref: NG Cl 1911.14(iii)	5. COLOUR OF FINISH:
6. PAINT SYSTEM TO BE APPLIED OVER: AREA REF: ……. AREA DESCRIPTION: ……. PROTECTIVE SYSTEM TYPE: (i.e. I, II etc):……...	

7. DETAILS	1st Coat	2nd Coat	3rd Coat	4th Coat
Registered Description				
Item No. and Colour				
Date Registered				
BBA HAPAS Roads and Bridges Certificate Reference				
Brand Name and Manufacturer's Ref. No.				
Manufacturer's Data Sheet No.				
Where Applied				
How applied				
Minimum dry film thickness (mdft) (μm)				
Maximum local dft (See Cl. 1914.7) (μm)				
Estimated total volume of paint likely to be used. (litres)				
'A' type testing required (YES/NO) (See Cl 1912.3)				
'B' type testing required (YES/NO) (See Cl 1912.10)				

8. STRIPE COAT DESCRIPTION (Including Item No. and colour) Workshop: Site:	9. PAINT MANUFACTURER'S OFFICIAL STAMP:
10. Mdft (μm) NOTE. The minimum total dry film thickness of the paint system, neglecting primers and sealers under 30 microns, shall be 15% greater (to the nearest 25 microns) than the sum of the mdfts of the individual paint coats.	11. APPROVED BY: DATE

Note: The Operating Company shall complete the paint system sheet HA/P1 for protection of steelwork against corrosion for new work.

A separate form shall be provided for each Structure, including CCTV masts, cantilever masts, street lighting columns and bracket arms as appropriate.

APPENDIX 19/3 – (SPECIFICATION FOR HIGHWAY WORKS) FORM HA/P2 PAINT DATA SHEET

BBA HAPAS Road and Bridges Certificate Reference and Date:

Manufacturer: Item No:

Registered Description: Brand Name and Reference No:

Consistency and Method of Application: Weight per 5 Litres (kg):

Specific gravity: Colour:

For two-pack paints :

Base: Activator: Mixed Components:

Volume Solids %:

For two pack paints volume solids % for mixed paint:

VOC content g/l (mixed):

Manufacturer's Minimum Dry Film Thickness Range

Recommended lower mdft:

Recommended upper mdft:

Full Application Instructions:

Mix ratio:

Flash Point:

		5°C	10°C	20°C	30°C
Drying Times (hours)	Surface Dry				
	Hard Dry				
Overcoating Times (hours)	Minimum				
	Maximum				
Pot Life (hours)					

Cleaning Solvent:

State effects on Drying Times of Temperatures below 20°C:

Manufacturer's Application Restrictions:

e.g. for Temperatures or Humidity:

Manufacturer's General Recommendations:

Note: The Operating Company shall complete the paint system sheet HA/P2 for protection of steelwork against corrosion for new work.

APPENDIX 19/4SE – (SPECIFICATION FOR HIGHWAY WORKS) FORM SEDD/P3

PAINT SAMPLE DESPATCH LIST: SHEET 1

Contract Title:

Structure Name : Structure No:

Client Name:

Supervising Firm: Fax No:

Supervising Firm's Representative Name: Tel No:

Address:

Painting Inspection Firm:

Samples Despatched From: (Note 1) Date Despatched:

Inspector's Name: Tel No:

Inspector's Signature:

SAMPLES: (Numbered A1, A2 etc. or B1, B2 etc.) (Note 2)					
Sample No.	Item No.	Manufacturer's Reference No.	Batch No	Colour BS 4800 reference (Note 3)	Sp.G. (note 4 & 5)

Paint Manufacturer:

(SPECIFICATION FOR HIGHWAY WORKS) FORM SEDD/P3

PAINT SAMPLE DESPATCH LIST: SHEET 2

1 Procedures

1.1 To be followed closely before despatch of paints to Scientifics Ltd or an approved local paint testing firm:

Check the specific gravity of each batch of paint,

Check the matching of finish colours to BS 4800,

Select the required sample, i.e.

(i) 'A' sample – unopened tin, and

(ii) 'B' sample – 500 ml sample from painter's kettle or from nozzle of airless spray gun in the case of single component coatings or if the check is to be done in situ. Otherwise, for two pack coatings, separate samples of the base and the activator must be dispatched to the testing laboratory.

List contract details in Section 1 of Form SEDD/P3,

List details of each set of samples in Section 1 of Form SEDD/P3 including the specific gravity of each sample,

Send Form HA/P1 Paint System Sheet with Form SEDD/P3 to the following:

(i) Scientifics Ltd, 500 London Road, Derby, DE24 8BQ or an approved local paint testing firm, and

(ii) The Director, Buchanan House, 58 Port Dundas Road, Glasgow G4 0HF.

The Operating Company shall despatch samples to (i) above.

The Operating Company shall label samples correctly, clip lids of tins down securely and send the samples promptly.

Samples shall be labelled with this Contract title, structure name, sample number, and additionally in the case of 'B' samples, item number, manufacturer's reference number, batch number and colour.

Results will be notified by the Director, as soon as they become available.

Notes:

1 State whether from workshop or Site (give name and address).

2. Batch samples comprising unopened tins to be marked A1, A2, etc. Control samples in 0.5 litre tins to be marked B1, B2, etc. Samples No. to run consecutively, i.e. A1 and B1 onwards.

3. Colour reference to BS 4800 to be given, as stated on Form HA/P1 (Maintenance) Paint System Sheet, e.g. 18 B 25.

4. For 'A' samples specific gravity (Sp.G.) to be measured by Inspector from separate tins of the same batch. For 'B' samples Sp.G. to be measured by Inspector when taking samples. Samples will be rejected unless Sp.G. is filled in above by Inspector.

5. If Sp.G. differs appreciably from data sheet do not dispatch 'A' or 'B' samples.

6. The Operating Company shall complete the paint system sheet SEDD/P3 for protection of steelwork against corrosion for new work.

APPENDIX 20/1 – WATERPROOFING FOR CONCRETE STRUCTURES

1 Repair and Replacement of Bridge Deck Waterproofing

1.1 Repair and Replacement of Bridge Deck Waterproofing shall be in accordance with clause 2008.

Where details of existing waterproofing systems to bridge decks are unknown the Operating Company shall carry out investigations to determine the system employed. The integrity of the waterproofing membrane and bond to substrate shall be included in the investigation.

2 Bridge decks without waterproofing

2.1 Some existing bridge decks may not have received waterproofing. In such cases the deck shall be prepared to a U4 finish and receive waterproofing in accordance with Series 2000.

3 Typical Existing Waterproofing Systems

3.1 Typical Waterproofing systems that may be found on the Trunk Road network include:

(i) Mastic Asphalt System,

(ii) Proprietary membrane and sheet system, and

(iii) Proprietary sprayed waterproofing system.

4 Design

4.1 Non-destructive integrity tests compatible with the waterproofing system shall be carried out in accordance with clause 2007.

4.2 Where the concrete deck deviates from a U4 finish further preparation shall be carried out to bring the surface finish up to a suitable standard for the application of waterproofing.

4.3 The application of an additional thin screed coating on the existing concrete deck shall only be used for localised repairs.

5 Waterproofing with bituminous paint to buried faces of concrete structures

This shall be applied as follows:

Material	**Method of Application**	**Rate of Application**	**Number of coats**
Bituminous paint	Brush or spray applied	0.55 litres / m^2 (first coat) 0.45 litres/m^2 (second coat)	2

APPENDIX 24/1 – BRICKWORK, BLOCKWORK AND STONEWORK

1 Selection of Mortar Type

1.1 The Operating Company shall select lime or cement mortars on the basis of the points listed below and in conjunction with clause 2470AR.

For repointing of natural stone masonry, lime mortars should generally be used, and particularly for weaker/more porous masonry. Cement mortars will normally only be permitted in natural stone structures where stonework consists of hard, non-porous masonry and subject to harsh environmental exposure conditions or below open water level.

The mortar mix will vary for each Scheme depending on the exposure of the work, the stone in question and the time of year that the work is carried out. Specialist advice shall be sought for the appropriate mortar mix, from the Scottish Lime Centre or equivalent organisations.

2 Cement Mortars

2.1 The mortar designation shall be selected by the Operating Company from Table 24/5 of the Specification (as amended by the Contract Specific Minor Alterations).

Sulphate resisting portland cement shall be used in all mortar designations where located below non tidal open water.

The Operating Company shall determine other locations where it shall be appropriate for sulphate resisting portland cement to be employed.

3 Lime Mortars

3.1 Lime mortar shall be mixed using gauging boxes.

The durability designation shall comply with clause 2476AR and shall be selected by the Operating Company from Table 24/7, 24/8 and 24/9 of this Specification.

The Operating Company shall ensure that personnel responsible for the supervision of the production of mortars and the like shall be suitably experienced in the techniques of preparing and using traditional lime mortars.

Where ready made mortars are purchased the Operating Company shall obtain evidence that the supplier shall be suitably experienced in the techniques of production of traditional lime mortars.

4 Selection of masonry

4.1 Natural building stone in repair work shall be of the same quality colour and type as adjacent sound stone and bedded jointed dressed and tooled to match.

Before building into the Site activities the Operating Company shall compare and match samples of natural building stone with the existing sound stone.

Reconstructed stone shall be of the same quality colour and type as adjacent sound existing reconstructed stone.

Before building into the Site activities the Operating Company shall compare and match samples of reconstructed stone with the existing sound reconstructed stone.

5 Repointing

5.1 Pointing to repair work shall be finished to match the existing pointing of adjacent sound areas of pointing to brickwork, blockwork, reconstructed stonework and stonework.

In new work:

Finished pointing shall generally be:

(i) bucket handle in brickwork, block-work and reconstructed stone,

(ii) flush with the exposed face in natural ashlar stonework and stonework in arch rings and faces, and

(iii) finished 5 mm from the exposed face of squared or un-squared coursed or un-coursed random rubble stonework.

The proposed specification and details of brickwork, stonework, blockwork and reconstructed stonework and other relevant details for new build shall be submitted for the written consent of the Overseeing Organisation.

6 Other

The variation in depth, front to back, of stones for natural stone face-work to cast concrete shall not exceed 25 mm.

The variation in depth, front to back of adjacent stones for natural stonework in composite walls shall not exceed 50 mm.

In coursed work the courses shall generally be horizontal.

For all work, bricks, stone blocks, reconstructed stone and mortar materials shall be stored on pallets and kept dry.

Bonding for brickwork and blockwork in repairs shall match existing and for new work shall be submitted for the written consent of the Overseeing Organisation.

The Operating Company shall comply with British Standard 8000-3 'Code of Practice for Masonry' in terms of standards of workmanship and Site practice.

The type of permitted fill between the crown of the arch and the underside of the pavement as described in clause 2417.25 shall be selected by the Operating Company based on the fill thickness and site specific criteria.

Unreinforced masonry arch bridges shall be waterproofed with a permitted sheet system conforming to clauses 2003 and 2005 of the Specification.

APPENDIX 26/1 – ANCILLARY CONCRETE

SRPC (sulphate-resisting portland cement) shall be used when required.

APPENDIX 30/1 – GENERAL

1 The Operating Company shall give at least two Working Days notice to the Overseeing Organisation of the intention to commence any of the Operations listed in Sub-clause 3001.2 to take place at the locations listed below:

(i) Sites of Special Scientific Interest,

(ii) Special Areas of Conservation including candidate sites,

(iii) Special Protection Areas including candidate sites,

(iv) Ramsar sites,

(v) Sites of Interest for Nature Conservation, and

(vi) Any site of Archaeological interest which may be affected by the Operations.

The Operating Company shall also ensure that the appropriate advisory body (for example Scottish Natural Heritage, Scottish Environmental Protection Agency and Historic Scotland) shall also be advised of the intended Operations prior to the Operations commencing on Site.

2 The Operating Company shall comply with the schedule of environmental commitments given in the Environmental Statement for the Forth Replacement Crossing where they relate to Operations. These are re-stated in Annex 5.8/A of Schedule 5 Part 8.

3 Pesticide record forms as detailed below shall be submitted to the Overseeing Organisation on an annual basis as part of the annual report to be submitted in accordance with Schedule 7 Part 4.

LANDSCAPE WORKS PESTICIDE RECORD

Contract Reference number:

Date of visit …/…/…

(minimum one record per day)

Contract Name: Name of Operating Company:

Operating Company's telephone number:……..

Operations carried out	**Pesticide used**	**Location of operation**
Total weed control		
Selective herbicide		
Weed control in vicinity of any burn, ditch, or open water		
Weed control around planting		
Weed control to cultivated beds		
Other		

Names and qualifications of operatives on Site:

Supervisor ……

Operatives……

Storeman ...……

Application by …….....

Signed for Operating Company:……

Operating Company's observations on damage or any other incidents:

……

……

……

3 The bird nesting season shall be generally accepted as being from the end of March to the end of July but shall be confirmed by the Operating Company after consultation with Scottish Natural Heritage.

Evidence of this consultation shall be provided by the Operating Company to the Overseeing Organisation prior to any Operations commencing on Site.

4 Inspection Reports are required for the activities carried out under clauses 3007, 3009 and 3010 on the form below.

Inspection Reports shall be submitted at the following intervals:

(i) In the case of activities carried out under clause 3009:

(a) six times per year in the first relevant 52 week period of the period of establishment maintenance,

(b) four times per year in the second relevant 52 week period of the period of establishment maintenance,

(c) three times per year in the third relevant 52 week period of the period of establishment maintenance, and for any remaining years as appropriate,

and

(ii) In the case of activities carried out under clauses 3007 and 3010 at the frequencies stated in Schedule 7 Part 1 for Detailed Inspections.

LANDSCAPE WORKS – INSPECTION REPORT

Contract reference Number:

Date of visit .../.../…

Contract Name:

Name of Operating Company:

Operating Company's telephone number:

Operations carried out	**Location of Operations**

Names of operatives on Site:

……..……

Operating Company's observations on damage by others additional work required or general condition of the Operations and/or Works:

……..……

This maintenance visit has been satisfactorily completed.

SIGNED (for Operating Company)……

NAME IN CAPITALS……... DATE../../..

SIGNED (For Overseeing Organisation)……..

NAME IN CAPITALS:……..

APPENDIX 30/2 – WEED CONTROL

1 The Operating Company shall control all injurious weed species which shall be defined for this Appendix as being those listed in sub-clause 3002.1 with the addition of Oil Seed Rape, Rosebay Willowherb and Rhododendron Ponticum within or associated with the Unit and throughout all Annual Periods at sufficient frequency to restrict their growth and prevent their spread.

The Operating Company's programme of weed control shall ensure there shall be a significant reduction in the occurrences and extent of these species each successive year for until the Service End Date wherever they occur.

In locations where effective weed control shall be possible and practicable by other means allowed within this Contract there shall be a presumption against the use of chemical herbicides.

2 The Operating Company shall apply contact, translocated or residual herbicide for total weed control at the following locations:

(i) All Structures, paved areas, kerbs, hardstandings, filter drains and gravel areas (including gravelled central reserves).

The Operating Company shall apply herbicides at sufficient frequency to eliminate weed growth in these areas until the Service End Date.

3 The Operating Company shall apply non-residual translocated herbicide for the total elimination of vegetation during Site preparation at the following locations:

(i) all areas prior to seeding or planting, and

(ii) all stockpiles of topsoil.

4 The Operating Company shall use a translocated herbicide approved by the Scottish Environmental Protection Agency in or near water for the total control of vegetation in all filter drains and any other areas adjacent to water and requiring weed control.

The application shall be at sufficient frequency to eliminate weed growth throughout the duration of this Contract.

5 The Operating Company shall apply herbicide for the selective control of all weeds listed in paragraph 1 above in all non-hardened verges and central reserves, planted areas and other grassed areas throughout the Site including embankments and cuttings.

The application shall be at sufficient frequency to restrict their growth and prevent their spread.

6 The Operating Company's programme of weed control shall ensure there shall be a significant reduction in the occurrences of these species each successive year until the Service End Date wherever they occur.

7 Where any of the weeds listed in paragraph 1 of this Appendix are controlled using herbicide, the application shall be by spot treatment in accordance with the

manufacturer's written instructions unless otherwise consented to in writing by the Overseeing Organisation.

Spot treatment shall be via controlled droplet application of a type appropriate to the herbicide being used and the location, at the season and frequency appropriate to the species being treated.

8 Handweeding shall be undertaken at appropriate locations.

9 Within wildflower areas or areas of nature conservation value the Operating Company shall eliminate any injurious weeds that cannot be effectively controlled by chemical means without causing damage to other vegetation by hand pulling in accordance with sub-clauses 3002.8 and 3002.10 and at the frequency stated in paragraph 1 of this Appendix.

10 The Operating Company shall hand weed as necessary and at sufficient frequency to eliminate weed growth throughout the duration of this Contract in the following locations:

(i) ornamental shrub beds where the application of herbicide may cause damage,

(ii) hedgerow planting where herbicide application may cause damage,

(iii) around planting stations in existing woodland,

(iv) within plant protectors and tree/shrub shelters,

(v) where necessary throughout or associated with the Unit for the control of Ragwort and Oil Seed Rape, and

(vi) in areas densely populated with desirable broadleaved species or areas of wildflowers where the application of herbicide may cause damage.

11 The Operating Company shall cut weeds listed in paragraph 1 of this Appendix throughout or associated with the Unit that have become unsightly or a nuisance or to prevent such weeds becoming unsightly or a nuisance or to facilitate effective control by herbicide.

12 Any arisings from weed control Operations shall be removed from Site and disposed of to a licensed disposal facility.

Where weed control Operations result in the production of controlled waste products typically from Ragwort and Japanese Knotweed the arisings shall be placed in waterproof bags sealed and removed from the Site to a licensed disposal facility.

The Operating Company shall remove the remnants of any dead or dying weeds at the appropriate time following herbicide application.

APPENDIX 30/3 – CONTROL OF RABBITS AND DEER

1 The Operating Company shall carry out rabbit, hare and deer control in all areas of new planting or seeding undertaken under this Contract for the duration of the period of establishment maintenance.

For all other areas within or associated with the Unit the Operating Company shall undertake rabbit, hare and deer control when instructed by the Overseeing Organisation.

No guns or snares shall be used for the control of rabbit, hare and deer without the written consent of the Overseeing Organisation.

The Operating Company shall be responsible for contacting adjacent landowners regarding their obligation to control infestations on their own land and thereafter to liaise as necessary to control co-ordination and report any further complaints in writing to the Overseeing Organisation.

Areas of brambles and herbage that interfere with the control of rabbit or deer shall be cut.

The arisings shall either be used to form habitat piles or chipped and spread around the Site in locations within the Site where the habitat piles and/or the chippings shall not be likely to become visually intrusive or interfere with access or maintenance.

No clearance of brambles or herbage shall be undertaken during the bird nesting season without the completion of a comprehensive bird survey by appropriately qualified ecologists and the submission of a corresponding report for the written consent of the Overseeing Organisation.

For all areas of new planting or seeding Operations and/or Works the Operating Company shall maintain the planting enclosures free of rabbits, rabbit burrows including exit/entry holes and deer for the duration of the period of establishment maintenance.

For all areas of new planting or seeding Operations and/or Works the Operating Company shall replace all plants damaged by rabbits, hares and/or deer and maintain them for the entire duration of the period of establishment maintenance.

APPENDIX 30/4 – GROUND PREPARATION

1 Prior to treatment with an appropriate herbicide, the Operating Company shall cut all areas to be planted or seeded to a height of between 50 – 75 mm, and remove the arisings from the Unit to a licensed disposal facility.

2. The Operating Company shall apply herbicide to all areas to be planted or seeded with the exception of areas in existing woodland and on rock faces.

3. Prior to spreading topsoil the Operating Company shall rip the sub-soil in all areas to be planted other than on rock faces.

The minimum depth of ripping shall be 450 mm unless otherwise consented to by the Overseeing Organisation.

The spacing between tine furrows used for ripping shall be 500 mm.

The requirements of sub-clauses 3004.8 to 3004.11 shall apply to subsoil to be seeded or topsoil spread.

Stones brought to the surface during final preparation of soils shall be retained on the Unit and used to form habitat piles in locations where the habitat piles are not likely to become visually intrusive or interfere with the Operations.

All inorganic foreign matter shall be removed off the Unit.

APPENDIX 30/5 – GRASS SEEDING, WILDFLOWER SEEDING AND TURFING

1 Wildflower seeding shall be undertaken typically in early Spring or early Autumn and following best horticultural practice appropriate to the species involved.

2. Immediately prior to any sowing of grass and wildflower seed, hydraulic seeding or laying turf, with the exception of rock faces and inaccessible areas, the Operating Company shall reduce the upper 50 mm of soil to a fine tilth by use of a chain harrow, rotovator or other suitable construction plant.

3. Fertilisers and organic soil improvers may be used with the written consent of the Overseeing Organisation to aid initial grass establishment in areas where this may be difficult to achieve.

The use of such additives is not permissible in areas of proposed wildflower seeding.

4 Grass and wildflower/grass seed mixtures shall be selected by the Operating Company and submitted to the Overseeing Organisation for written consent prior to ordering.

The selection shall take account of the following criteria:

(i) Intended work location – the choice of grass and/or wildflower species may vary depending on the relative location of the proposed work,

(ii) Proximity to any areas of nature conservation interests – the Operating Company shall consult with Scottish Natural Heritage if the intended Site for seeding lies in or adjacent to an area of conservation interest,

(iii) Biodiversity interests – including the specification of wildflower species native to Scotland or the UK and of local provenance,

(iv) Deer interests – deer can often be attracted to the road side by the presence of new grass seeding and some areas may be more likely to have regular deer activity near to the road. The Operating Company shall consider a choice of grass and wildflower seed that is less palatable to deer, and

(v) Future maintenance requirements – the choice of seed type shall balance the need for good establishment with reduced long term maintenance, particularly in less accessible areas such as central reserves. For wildflower/grass mixtures the ratio of grass seed to wildflowers shall be 80% to 20% respectively. No single species of wildflower shall be less than 10% of the wildflower component with the exception of Ox Eye Daisy (Leucanthemnum vulgare) that, if specified, shall be limited to 3% of the wildflower component.

All seed shall be delivered to the Unit in bags sealed by the supplier.

A label shall be attached to each bag giving details of species and percentage breakdown.

The same details shall also be enclosed within the bag.

Each bag shall be numbered differently and relate to the label and documents within the bag.

The documents within the bag shall be retained by the Operating Company for inspection by the Overseeing Organisation.

The wild flower seeds shall be of UK native origin selected and procured in accordance with Appendix 1 of 'Cost *Effective Landscape: Learning from Nature' published by the Scottish Office in 1998 and any subsequent editions.*

The Operating Company shall complete and submit to the Overseeing Organisation the appropriate Wildflower Seed Provenance Certificates in the format shown in this Appendix.

5 The grass seed mixture shall be sown at a rate of not less than 20g/m^2 for side slopes of cuttings and embankments and 15g/m^2 elsewhere.

Wildflower/grass mix shall be sown at a rate of not less than 10 g/m^2.

6 Hydraulic seeding shall be undertaken only with the prior written consent of the Overseeing Organisation.

It shall typically be undertaken on areas such as rock and scree slopes but may be utilised elsewhere as appropriate.

Seeding rate of application for grass seed mix and wildflower/grass mix shall be the same as for conventional sowing.

7 The number of establishment cuts for all newly-established/sown grass shall be 4 for high amenity areas and 2 for all other grass areas.

WILDFLOWER SEED PROVENANCE CERTIFICATE

CERTIFICATE A – Seed Harvested from the Nursery

Certificate No:…….

Species	Name of seed supplier	Name and location of the nursery from which the seed was harvested	Locations and dates of seed collection	Name of person(s) and company(s) responsible for collecting the seed	Any other relevant details or comments

We hereby certify that the wildflower seed incorporated into Operations is as identified in the Specification Appendix 30/5, and the details provided with each individual bag of seed delivered to the Site.

Part (i). (in the event of the Operations being sub-contracted by the Operating Company to be completed by the sub-contractor responsible for undertaking the planting Operations).

SUB-CONTRACTOR

Firm:…….

Name:……

Position:……

Signed:……..……

Date: ../../..

Part (ii). (to be completed by the Operating Company, regardless of whether or not the planting Operations have been sub-contracted).

OPERATING COMPANY

Firm:…….

Name:……

Position:……

Signed:……..……

Date: ../../..

WILDFLOWER SEED PROVENANCE CERTIFICATE

CERTIFICATE B – Seed Collected Directly from the Wild

Certificate No:…….

Species	Name of seed supplier	Locations from which the seed was harvested	Dates of seed collection	Name of person(s) and company(s) responsible for collecting the seed	Any other relevant details or comments

We hereby certify that the wildflower seed incorporated in to Operations is as identified in the Specification Appendix 30/5, and the details provided with each individual bag of seed delivered to the Site.

Part (i). (in the event of the Operations being sub-contracted by the Operating Company to be completed by the sub-contractor responsible for undertaking the planting Operations).

SUB-CONTRACTOR

Firm:…….

Name:……

Position:……

Signed:……..……

Date: ../../..

Part (ii). (to be completed by the Operating Company, regardless of whether or not the planting Operations have been sub-contracted).

OPERATING COMPANY

Firm:…….

Name:……

Position:……

Signed:……..……

Date: ../../..

APPENDIX 30/6 – PLANTING

1 All new plant stock to be used within the Unit shall conform to British Standard 3936: Nursery Stock and British Standard 4043: Recommendations for transplanting rootballed trees, with the exception that Holly (Ilex aquifolium) which shall be container grown to a minimum height of 500 mm and then cut back to 200 mm in height before delivery to the Unit.

Plant stock types, planting densities and sizes shall be as Tables 30/2, 30/3 and 30/4.

TABLE 30/2 – Extra Heavy Standard, Heavy Standard, Standard, Rootballed Conifers and Feathered Trees

Type	Girth at 1m Above Ground Level (centimetres (cm))	Clear Stem from Ground Level (metres (m))	Minimum Height from Ground Level (metres (m))	Maximum Height from Ground Level (metres)
Extra heavy standard	14 to 20	1.8	4.25	6.0
Heavy standard	12 to 14	1.8	3.5	4.25
Standard	8 to 10	1.8	2.5	3.0
Large rootballed conifers	–	–	1.5	1.75
Feathered Tree	–	–	1.2	1.8

TABLE 30/3 – Whip transplants, Container Grown and Cell Grown Stock

Type	Minimum Age (years)	Minimum Height Above Ground Level (millimetres)	Minimum Container Size
Cell grown stock: Broadleaves Conifers	1.5	 250 180	175 cc
Whip transplants	3.0	450	–
Container grown evergreens	3.0	200	2 litres or 1.5 litre rigid cell with internal grooves or ridges

TABLE 30/4 – Shrubs, Conifers, Hedge Plants, Climbers and Ground Cover Plants

Type	Minimum Density (plants/per square metre or as shown)	Minimum Age (years)	Column A Acceptable Height (millimetres)	Column B Minimum Height for Small/Slow Growing Plants not Readily Available to Sizes Shown in Column A (millimetres)	Minimum Volume (litres (l))
Hedge plants, bare root beech, hawthorn	6 per linear metre double staggered row	3.0	400-600	–	–
Cell grown		1.5	200-400		
Other species as detailed on the drawings and Specification		Other as above			
Bare-root shrubs	As Ordered	3.0	300 to 600		–
Container grown shrubs and conifers	As Ordered	3.0	450 to 600	300 to 450	2 or 1.5 rigid cell with internal grooves or ridges
Container grown climbers	As Ordered	3.0	600 – 900	400 to 600	2
Ground cover plants	As Ordered	3.0	300 – 450	150 to 200	2
Marginal and aquatic plants	As Ordered	2.0	150 – 300	100 to 150	2

2. Any planting design shall be accompanied by written confirmation from the Operating Company that, in respect of the planting proposed, the United Kingdom native plant species of trees, shrubs climbers and wildflower (seeds and plants) will be sourced from the highest available preference for selecting native seed sources

contained within Appendix 1, Figure 5 of *Cost Effective Landscape: Learning from Nature*, first published by the Scottish Office in 1998.

3. This confirmation shall be provided prior to the commencement of the landscape planting Operations and shall consist of the completed Provenance Certificates in the format shown in this Appendix.

4. Where there is a choice of form of plant, preference shall be given to the most local provenance.

PROVENANCE CERTIFICATE

Certificate Number…….

1 We hereby certify that the provenance of the United Kingdom native plant stock incorporated in the Operations shall be as identified in the Plant Schedule contained in Annex 1 of this Certificate.

2. The words and phrases herein, unless otherwise stated, have the same meaning as attributed to them in *Cost Effective Landscape: Learning from Nature (Scottish Office publication, February 1998).*

PART A. (in the event of the Operations being sub-contracted by the Operating Company to be completed by the sub-contractor responsible for undertaking the planting Operations).

SUB-CONTRACTOR

Firm:…….

Name:……

Position:……

Signed:……..

Date: ../../..

PART B. (to be completed by the Operating Company, regardless of whether or not the planting Operations have been sub-contracted).

OPERATING COMPANY

Name:……

Position:……

Signed:……..

Date: ../../..

PROVENANCE CERTIFICATE

Certificate Number:…….

ANNEX 1 – Plant Schedule

Botanical Name	Quantity	Form/Age	Height (Cm)	Zone Of Provenance And Location	Approximate Date Propagation Material Collected	Nursery(S) Where Plants Have Been Grown

1. The Operating Company shall make special arrangements for the Overseeing Organisation to inspect planting stock at the nursery if requested by the Overseeing Organisation.

2. Tree pits shall be back-filled with Class 5A or Class 5B topsoil.

3. Planting compost may be used for the cultivation of intended planting areas where the soil structure is poor or nutrient deficient and will be detrimental to the successful establishment of the planting.

4. Areas intended for the use of compost shall have the written consent of the Overseeing Organisation prior to the incorporation of the compost.

5. Slow/controlled release fertiliser with a nitrogen: phosphorus: potassium: magnesium ratio of 14:8:13:2 shall be incorporated into backfill of pits for standard trees, heavy standard trees and extra heavy standard trees at the following rates respectively - 20 grams, 40 grams and 100 grams and into the top 75 mm of planting bed soil in ornamental planting areas at the rate of 100 grams per square metre.

6. Scattering fertiliser of any description on the surface of the ground around the plants is not permitted.

7. Root dips shall be applied to all bare root plants and shall be applied to all evergreen species in accordance with the manufacturer's written instructions.

   Root dips shall be applied at the following times:

   (i) immediately after the plants have been dug-up in the nursery,

   (ii) on arrival at Site, and

   (iii) immediately prior to planting if more than 3 days delay after arrival on the Site.

8. Anti-desiccant sprays shall be applied on arrival of the plants at Site and immediately prior to planting if more than 3 days delay after arrival on site.

9. Planting of bare-rooted root-balled and cell grown trees shrubs non-aquatic perennials and wildflower plants shall take place during favourable weather and soil conditions, between the beginning of November and the end of March unless otherwise consented to in writing by the Overseeing Organisation.

10. Bare-rooted or root-balled conifers and all evergreens shall be planted either during November or March.

11. Notch planting shall be into a T-shaped opening of sufficient size for the roots of bare-rooted plants to be fully spread out or to accommodate a cell-grown plant without breaking the root plug.

12. The T-shaped opening shall be through an upturned turf which shall have been dug from the planting location or upturned ground where there shall be no turf.

13. For individual plants, turfs or upturned ground shall be 300 mm square and 200 mm deep, for single row hedges strip of turf or upturned ground shall be 300 mm wide and 200 mm deep and for a double-row hedge, the strip shall be 600 mm wide and 200 mm deep.

14. Surrounding ground shall be firmed back after planting.

15. Planting pits and trenches shall be in accordance with Table 30/1 below. Unwanted sub-soil arising from planting pits and trenches shall be retained on Site, wherever practicable, and deposited in new mounding.

TABLE 30/1 – Planting Pits and Trenches

TYPE	DIMENSION OF EXCAVATION WxWxD mm	DEPTH OF CULTIVATION AT THE BASE OF PITS OR TRENCHES mm
Semi-mature trees	Measurement of root-ball plus 400 in each direction.	200
Extra heavy and heavy standard trees	1800 x 1800 x750	200
Standard trees	1000 x 1000 x 500	200
Feathered trees	600 x 600 x 400	200
Whip trees, shrubs and climbers where pit planting shall be specified	300 x 300 x 350	150
Hedges	* x 600 x 350	150
Cell-grown plants where pit planting shall be specified and container grown plants.	100 greater than W and D of root-plug.	

* length of hedge

16 Where planting is undertaken in land without a topsoil depth of 350 mm or greater trenches excavated in accordance with Table 30/1 shall be backfilled with Class 5A or Class 5B as required to make up the required volume.

17 Where planting is in undisturbed land and where the existing topsoil is 300 mm deep or deeper, the ground shall be cultivated to a minimum depth of 300 mm and all live injurious weed roots and growth and all stones and other such arisings above 75 mm in any one dimension, shall be removed to a licensed disposal facility.

18 Areas where topsoil has been spread to a depth of 300 mm or greater shall be cultivated in accordance with sub-clause 3006.29 prior to planting.

19 Where a hedge is planted in undisturbed land and where the existing topsoil is 300 mm deep or deeper, a 600 mm wide strip along the proposed hedgerows shall be

cultivated transplants, feathered trees, whip trees, shrubs, climbers and container-grown plants shall be back-filled with Class 5A topsoil and lightly firmed prior to planting.

21 Root barriers shall only be required where the clearances required for underground services and drainage infrastructure affects the requirement of the planting.

22 The Operating Company is responsible for determining the location of any underground services in the vicinity of the proposed planting area and shall secure agreement with the relevant Statutory Undertaker(s) before employing root barriers to reduce standard clearances from their services.

23 Semi-mature trees shall be planted as shown on HCD Drawing No. K5.

24 Backfill to tree pits shall comprise any Class 5A or Class 5B topsoil as required.

25 Controlled release fertiliser in accordance with sub-clause 3006.15 shall be thoroughly mixed into the topsoil.

26 All newly planted standard heavy standard extra heavy standard and semi-mature trees shall be fully watered-in to field capacity on the same day as planting.

27 All container grown cell grown and root-balled plants shall be watered to field capacity immediately before planting.

28 A 75 mm diameter perforated flexible, plastic irrigation pipe shall be inserted around the root-balls of extra heavy standards trees at a depth of 150 mm below the ground surface.

29 The pipe shall be of sufficient length to coil horizontally completely around the root system or root-ball and shall be provided with two 'T'-piece connections with aeration caps, which shall be located opposite each other. The leg of the T-piece shall extend vertically from the buried coil to a minimum of 5 mm above ground level in unpaved areas or flush with the paved surface.

30 Individual plant protectors a minimum of 750 mm in height and 80-100 mm diameter shall be used to protect all cell grown stock whip trees, feathered trees of under 4 years in age and holly plants within hedgerows except for hedge plants.

31 Individual plant protectors a minimum of 750 mm in height and 150 mm diameter shall be used to protect all shrubs, climbers, container grown evergreens and container grown conifers.

32 Fagus species shall be protected by plant protectors with base ventilation.

33 Shelters shall be supported by timber stakes attached by releasable ratchet ties.

34 Stakes shall be circular section "pencilled," and a minimum of 35 mm diameter in cross section or 35 x 35 mm square section, sharpened at one end.

35 Stakes shall be of sufficient length to adequately support the plant protector and remain stable in the ground for the full duration required.

36 Previously used tree and shrub shelters in sound condition may be used.

37 Timber mulch shall be composted wood chips or bark free of fungi and diseases, methyl bromide contamination and foreign material.

38 It shall be matured for a minimum of 16 weeks naturally heated by the process of decomposition to temperatures exceeding 50 degrees centigrade for a minimum period of 14 days followed by a period of not less than 1 week of stabilisation.

39 Individual mulch mats shall be square or round and not less than 800 mm x 800 mm (or 800 mm diameter) or greater than 1000 mm x 1000 mm (or 1000 mm diameter), and not less than 7 mm thick and biodegradable.

40 Sheet mulch shall be biodegradable and shall have a minimum thickness of 7 mm.

41 It may be used in areas of amenity planting except for planting areas in rock cutting.

42 Edges of sheet mulch mats shall be secured by burying a strip 100 mm wide around the edge of the mat vertically into the ground.

43 Sheet mulch used for hedges shall be laid in either of the methods specified in sub-clause 3006.62.

44 The number of bulbs to be planted per m2 per species shall be as follows:

Bluebell	150	
Crocus	100	
Tulips	50	
Narcissus (large)	40	
Narcissus (medium)	60	
Narcissus (small)	100	for example Lent lily (Pseudonarcissus)

45 The depth of planting shall be in accordance with good horticultural practice.

46 The Operating Company shall insert marker posts to identify the boundary of each planting or wildflower seeding area which are not otherwise to be protected by fencing or other structures.

47 The Operating Company shall replace all plants which are missing, have died or which in the opinion of the Overseeing Organisation are failing to make satisfactory growth for the duration of the period of establishment maintenance.

48 All replacement extra heavy standard, heavy standard and standard trees and any root-balled conifer stock shall be watered to field capacity following planting.

49 All areas of new planting undertaken by the Operating Company shall be subject to a period of establishment maintenance for a minimum duration of three years.

APPENDIX 30/7 – GRASS, BULBS AND WILDFLOWER MAINTENANCE

1 The Operating Company shall maintain all the grass and wildflower grass areas within the Unit in accordance with the landscape inventory categories.

In the case of any areas not recorded in the landscape inventory, the Operating Company shall agree the categories of these areas with the Overseeing Organisation.

2 No grass cutting shall be carried out within 250 mm of unprotected trees and shrubs. Strimmers shall not be used for cutting grass within unprotected planted areas without the written consent of the Overseeing Organisation.

3 All areas indicated within the landscape inventory as high amenity grass shall be cut to the minimum height detailed in sub-clause 3007.9 and at intervals between cuts not exceeding 14 days during the period between 1st March and 30th September each year.

4 All areas indicated within the landscape inventory as amenity grass shall be subject to medium frequency cutting in accordance with sub-clauses 3007.10.

Unless otherwise stated in the landscape inventory, this regime shall also apply to the following typical areas where they are not already subject to the high frequency regime:

(i) The full boundary width of all Trunk Roads subject to a 30 mph or 40 mph speed restriction including a 100 metres stretch before and after the speed restriction.

(ii) Grassed areas on roundabouts within or associated with urban areas and settlements.

(iii) Adjacent to all lay-bys and bus-stops to a maximum width of 5 metres from the back edge of the lay-by and including 25 metres from the end of the merge and diverge sections, tapering from the maximum 5 metres width behind the lay-by to tie-in with the 1.2 metres swathe cut at the edge of the carriageway, unless subject to an Order issued by the Overseeing Organisation.

5 All areas indicated within the landscape inventory as general grass shall be subject to low frequency cutting in accordance with sub-clause 3007.10

Unless otherwise stated in the landscape inventory the general grass regime above shall also apply to the following typical areas not already subject to the high amenity or amenity regimes:

(a) A 1.2 metre swathe width measured from the back edge of the carriageway,

This width shall be increased (to encompass the whole verge area) where the remaining grass between the 1.2 metre area and any adjacent boundary (for example a wall, fence, remote footpath or area of planting) is less than 2 metres.

(b) Grassed central reservations – cuttings from these areas shall be removed from Site,

(c) Grassed areas within visibility splays,

(d) Any areas where a varying width swathe cut may be desirable, such as large grassed cutting slopes or the inside of bends, and

(e) A 1.0 metre swathe width shall be cut to both sides of any footpaths remote from the carriageway edge but within the Trunk Road boundary.

6 All grassed areas indicated within the landscape inventory not covered by any of the high, medium or low frequency regimes shall be subject to minimal frequency cutting in accordance with clause 3007.10 except that the cut shall be undertaken in the late autumn and shall be to a height not exceeding 150 mm and such areas shall be cut once during the second Annual Period and once per two years thereafter.

7 Visibility splays in front of road signs shall be cut in accordance with the requirements for general grass areas. At no point shall any part of the sign board be obscured by grass or any other vegetation.

The extent of cutting shall be in accordance with sub-clause 3007.20.

8 In the locations stated in the landscape inventory, grassed banks and ditches shall be cut to a height of between 60 and 80mm, at a frequency of once per year. The arisings shall be dispersed evenly over the sward avoiding blockage of drains and ditches.

APPENDIX 30/8 – WATERING

1 The Operating Company shall water all new planting undertaken under this Contract in accordance with clause 3008 at the frequency necessary to ensure satisfactory establishment and healthy growth for the duration of the period of establishment maintenance.

2. Additional watering for trees, shrubs and or grassed areas shall be undertaken by the Operating Company only when subject to an Order from the Overseeing Organisation.

APPENDIX 30/9 – ESTABLISHMENT MAINTENANCE FOR PLANTING

1 All planting and planting areas shall be maintained by the Operating Company for the duration of the period of establishment maintenance in accordance with sub-clauses 3009.2 to 3009.25.

The period of establishment maintenance shall be three years minimum or otherwise as consented to in writing by the Overseeing Organisation.

2 Stakes, tubes, guards and their ties shall be removed from plants when they are no longer required and before the end of the period of establishment maintenance. Stakes, tubes and guards which are in good enough condition may be re-used by the Operating Company.

3 Where new planting has been undertaken, and where no mulch mats have been used the Operating Company shall apply a translocated herbicide to plant circles of all individual trees and shrubs, and clumps of planting where applicable in accordance with clause 3001 and sub-clause 3002.2 whilst protecting the trees and shrubs from the herbicide.

4 The Operation shall include the clearance of vegetation by hand from within the shelters and guards.

This part of the Operation shall be carried out twice (in early Spring and in October) during the first year of the three year period of establishment maintenance and once (in early Spring) during the second year of the period of establishment maintenance.

5 Where mulch has been used in individual plant circles or overall planting beds it shall be inspected by the Operating Company once per year in March for the duration of the period of establishment maintenance.

6 If the mulch depth shall be less than an even 75 mm, new mulch to sub-clause 3006.55 shall be laid to restore the 75 mm depth.

7 Mulch mats and sheet mulch shall be inspected three times per year and re-secured or replaced in accordance with sub-clause 3009.13.

8 All new beds of ornamental planting shall be inspected monthly during the growing season with the required maintenance Operations undertaken in accordance with sub-clause 3009.16.

9 The soil in ornamental planting beds where the beds are not mulched shall be cultivated in accordance with sub-clause 3009.19.

10 The base of all new hedge planting and an area of 300 mm width on each side shall be kept weed free for the first two years of the period of establishing maintenance in accordance with sub-clause 3009.20. During the same period the hedge shall be pruned once each year, between 1 September and 31 January, to encourage the formation of a vigorous, compact and uniform hedge. The current year's growth of prominent new shoots shall be reduced in length by 1/3.

11 All new planting of individual trees as defined in sub-clause 3009.24, shall be maintained for the three year period of establishment maintenance in accordance with sub-clause 3009.25.

APPENDIX 30/10 – MAINTENANCE OF ESTABLISHED TREES AND SHRUBS

1 Trees and shrubs shall receive weed control treatment by the Operating Company in accordance with clause 3002 at the frequencies stated in clause 3010.

2. Grass and weed growth within ornamental shrub beds shall be removed by hand or by chemical means.

3. Healthy arisings from pruning, cutting or felling of woody plants shall be treated in accordance with sub-clause 3010.4 paragraphs (ii), (iv), (vi), (vii) and (viii).

4. Treatment in accordance with sub-clause 3010.4 paragraph (ii) shall take place only where there shall be sufficient area within the Unit to spread the chippings out of sight from the road and to a maximum depth of 25 mm.

5. This treatment is not permitted where it is likely that the chippings will affect the growth of desired grass and/or plant species.

6. Chippings shall not be spread on sloping ground where they may inhibit vegetation growth which would otherwise help stabilise the slope.

7. Where arisings are treated in accordance with sub-clause 3010.4 paragraph (viii) the locations selected within the Site area shall not be visible from the road.

8. If it is not possible to deposit the arisings in the general locality of the Operations, the arisings shall be removed to a licensed disposal facility.

9. Species grown for coloured stems shall be cut in accordance with sub-clause 3010.8 paragraph (i). The cutting frequency shall be every two years.

10. Overgrown shrubs within all ornamental shrub areas shall treated in accordance with sub-clause 3010.8 paragraph (vii).

11 Tree size shall be categorised using the following method:

(i) Key factors relating to tree size/habit:

(a) Height of tree – measured in metres from ground level to the apex of the crown,

(b) Mean crown spread – calculated by adding the measurements in metres of the spread of the tree's crown along the north-south and east-west axes and dividing by two,

(c) The measurements referred to in paragraphs (a) and (b) of this sub-clause shall be taken to the nearest whole metre,

(d) Branch density factor shall be taken as follows: 1.00 for normal branch density 1.25 for heavy branch density, and

(e) Individual tree species shall be classified as having normal or heavy branch density in accordance with the following table:

Branch Density Classification of Individual Tree Species	
Normal Branch Density	Heavy Branch Density
Acer species	Carpinus betulus and cultivars
Aesculus species	Crataegus species
Alnus species	Chamaecyparis species
Betula species	Malus species
Castanea species	Populus alba 'Fastigiata'
Fagus species	Populus nigra 'Italica'
Fraxinus species	Prunus 'Amanagowa'
Juglans species	Prunus cerasifera 'Nigra'
Pinus species	Prunus padus and cultivars
Platanus species	Quercus ilex
Populus alba	Quercus robur 'Fastigiata'
Populus nigra	Sorbus species
Populus tremula	Tilia species
Populus balsamifera	Taxus baccata
Prunus avium and cultivars	
Prunus 'Kanzan'	
Pyrus species	
Quercus robur	
Quercus cerris	
Quercus rubra	
Robinia pseudoacacia	
Salix species	
Larix species	

Tree Size Factor = Height x Mean Crown Spread x Branch Density Factor.

Trees shall be categorised in accordance with the table below:

Tree Size Category	Tree Size Factor
A	3 to 34
B	35-70
C	71-125
D	126-200

Tree Size Category	Tree Size Factor
E	201-340
F	341-450
G	451-650

(ii) To be classed as a tree, vegetation must have a stem diameter of more than 100 mm.

12. Stumps shall be cut as close to the ground as possible or where the tree is growing in a hedge or fence line the stump shall be left level with the top of the hedge or fence.

13. Thinning and coppicing shall be carried out in areas of establishing and maturing woodland where identified as being required through the Operating Company's inspections and when ordered.

14. Scrub control shall be undertaken where identified as being required through the Operating Company's inspections and when subject to an Order. Tree and shrub species to be controlled as scrub shall have a stem diameter of less than 75 mm and a height of between 0.75 – 2.5 metres. The specified species shall be cut down to 50 mm above ground level and the plants allowed to re-grow. A translocated herbicide shall be applied during the period of active growth in accordance with clause 3001 Scrub control is required on rock ledges and scree where appropriate.

APPENDIX 30/11 – MANAGEMENT OF WATERBODIES

1 The Operating Company shall maintain all water bodies within the Unit in accordance with clause 3011.

2 The Operating Company shall inspect all water bodies and associated inlets and outlets within and associated with the Unit in accordance with the requirements of Schedule 7 Part 1.

3 The Operating Company shall eliminate injurious weeds as listed in clause 3002 growing within or immediately adjacent to water bodies.

4 Where silt is affecting the intended operation of a water body or is likely to have the potential to affect the intended operation of a water body the silt shall be removed in accordance with sub-clause 3011.8.

5 The Operating Company shall consult with the Scottish Environmental Protection Agency and any other relevant body prior to undertaking any Operations affecting a water body and shall apply for all necessary licences including as a minimum all licences required under the *Controlled Activities Regulations*.

6 All reed beds and marginal plants planted as part of the Operations shall be maintained by the Operating Company for the duration of the period of establishment maintenance with any failed or defective plants replaced in accordance with sub-clauses 3006.6 to 3006.90 inclusive.

All existing reed beds and marginal vegetation shall be inspected twice annually in accordance with sub-clause 3011.9.

7 In addition the Operating Company shall comply with the Schedule of Commitments given in the Environmental Statement for the Forth Replacement Crossing where they relate to operations. These are re-stated in Annex 5.8/A of Schedule 5 Part 8.

APPENDIX 30/12 – SPECIAL ECOLOGICAL MEASURES

1 With effect from Commencement of Service Date 1, in February and October each year until the Service End Date the Operating Company shall inspect all fencing, tunnels, underpasses, wildlife reflectors and all other provisions for wildlife contained within the Unit or as listed in the inventory of wildlife mitigation measures in accordance with sub-clause 3012.5.

2. The Operating Company shall consult and comply with Scottish Natural Heritage in respect of any Operations likely to affect any protected species or area.

3. The Operating Company shall obtain all necessary wildlife licences required for the effective maintenance and management of the Unit including any new Operations to be undertaken through this Contract.

4. In addition the Operating Company shall comply with the Schedule of Commitments given in the Environmental statement for the Forth Replacement Crossing where they relate to Operations. These are re-stated in Annex 5.8/A of Schedule 5 Part 8.

APPENDIX 32/1 - INCIDENT RESPONSE

1 INCIDENT RESPONSE TIME

1.1.1 The response time for attendance at an Incident shall be defined as the time taken from receipt of notification of the Incident by the Operating Company to commencement of appropriate action at the site of the Incident.

1.1.2 The Trunk Road Incident Support Service response times shall always be as short as practicable but in any event shall aspire to the target times stated in Table 1.1 of this Appendix.

TABLE 1.1 - RESPONSE TIMES FOR TRUNK ROAD INCIDENT SUPPORT SERVICES

Road Type	Operational Hours	Target initial response time	Target secondary response time
Designated Strategic Trunk Road Routes	06.30 to 18.30	20mins	20mins

1.1.3 The Incident Support Unit response times shall always be as short as practicable but in any event shall not exceed the maximum times states in Table 1.2 of this Appendix.

TABLE 1.2 - RESPONSE TIMES FOR INCIDENT SUPPORT UNITS

Road Type	Operational Hours	Maximum initial response time	Maximum secondary response time	Maximum Back-Up response time
Motorways and Dual Carriageways	07.00 to 19.00	1 hour	1 hours	24 hours
	19.00 to 07.00	1½ hours	2 hours	24 hours
Other Trunk Roads	07.00 to 19.00	1 hours	1 hours	24 hours
	19.00 to 07.00	1½ hours	2 hours	24 hours

1.1.4 The vehicle recovery service response times shall always be as short as practicable but in any event shall not exceed the maximum times stated in Table 1.3 of this Appendix for vehicle recovery on the Principal Crossings.

TABLE 1.3 - RESPONSE TIMES FOR VEHICLE RECOVERY SERVICE

Road Type	Vehicle Type	Operational Hours	Maximum Initial response time
Dual Carriageway- Forth Road Bridge	Light recovery vehicles, motorcycle recovery facilities and Impact Protection Vehicles	24 hours	15mins
Dual Carriageway- Forth Road Bridge	Heavy recovery vehicles	24 hours	45mins
Motorway – Queensferry Crossing	Light recovery vehicles, motorcycle recovery facilities and Impact Protection Vehicles	24 hours	15mins

2 INCIDENT SUPPORT VEHICLES

2.1 Vehicle Types

2.1.1 The primary vehicles that are used by the Operating Company for all initial Incident Response Operations by the Trunk Road Incident Support Service and Incident Support Units shall be as described in Table 2.1 of this Appendix for Type 1 vehicles.

2.1.2 Type 2 vehicles described in Table 2.1 may be specified by the Overseeing Organisation for specific routes or response operations.

2.1.3 The general vehicle liveries shall be as given in Appendix 1/75.

2.1.4 The TRISS vehicles shall, in addition, have:

- Class 1 red microprismatic diagonal markings alternating with yellow reflective diamond grade stripes on the rear of the vehicle,
- 600mm long 300mm wide alternating yellow and black rectangular 'Battenburg' pattern in retro-reflective material on the sides of the vehicle, and
- 'TRUNK ROADS INCIDENT SUPPORT' in black capital letters on the sides and rear of the vehicle with the mirror image on the front of vehicle.

TABLE 2.1 VEHICLE TYPES FOR TRUNK ROAD INCIDENT SUPPORT SERVICE AND INCIDENT SUPPORT UNITS

Vehicle Type	Description	Minimum Equipment Requirements for each vehicle
Type 1	2 wheel drive high roof van powered by a Euro 5 compliant engine with a minimum power of 129PS with automatic transmission and ABS. Gross vehicle weight 3500kg, capable of carrying the equipment detailed in Table 3.1 and performing the duties set out in this Contract. Unglazed rear and nearside loading door, shelving and full height steel bulkhead. Dual passenger seat with three point inertia seat belts. Driver and passengers' air bags. Air conditioning.	1 No. mobile CCTV Camera system of a type compliant with the specification contained within Appendix 1/77. Mobile VMS of a type compliant with the specification contained within Appendix 1/78. Appropriate type of built-in hands-free kit. Fire extinguisher and first aid kit. Global positioning tracking system (The Operating Company shall supply map based software to monitor vehicle locations, and record dates and times and movements of vehicles. The Operating Company will supply the relevant Network Operations provider with a live feed to this data).

Vehicle Type	Description	Minimum Equipment Requirements for each vehicle
	Drop pin and 50mm ball towing equipment. Access steps and grab handles. Audible reversing alert. Handwash station	Two light bars with corner lights, 8 rear lights and eight front lights and twin grill mounted yellow strobes connected into the vehicle electrics to remain functional when the vehicle ignition is off with an internal warning light fitted to indicate when the light bar is operational.
Type 2	4 wheel drive double cab pick-up powered by a Euro 5 compliant engine with a minimum power of 100PS, capable of carrying the equipment detailed in Table 3.1 and performing the duties set out in this Contract. Passenger seat with three point inertia seat belt. Driver and passenger's air bags. Air conditioning. Drop pin and 50mm ball towing equipment. Audible reversing alert.	Appropriate type of built-in hands-free kit. Fire extinguisher, first aid kit and a load restraint. Global positioning tracking system (The Operating Company shall supply map based software to monitor vehicle locations, and record dates and times and movements of vehicles. The Operating Company will supply the relevant Network Operations provider with a live feed to this data). A light bar with twin yellow strobes connected into the vehicle electrics to remain functional when the vehicle ignition is off with an internal warning light fitted to indicate when the light bar is operational.

3 INCIDENT RESPONSE RESOURCES

3.1 General

3.1.1 The Operating Company shall provide the Incident Response Resources specified in Table 3.1 of this Appendix.

TABLE 3.1 EQUIPMENT TO BE CARRIED IN TRUNK ROAD INCIDENT SUPPORT SERVICE AND INCIDENT SUPPORT UNIT VEHICLES

Equipment	Minimum Quantity	
	Vehicle Type 1	Vehicle Type 2
Electronic language translator	1 no.	1 no.
Tow rope	1 no.	1 no.
2 Stroke oil	2 x 1 litre bottles	2 x 1 litre bottles
Rigger Gloves	5 pairs	5 pairs
Lube oil spray	1 no. 400 ml tin	1 no. 400 ml tin
Hard hat	2 no.	2 no.
Diesel Fuel	5 litres in container	5 litres in container
Petrol	5 litres in container	5 litres in container
Fence Nails & Staples	Sufficient	Sufficient
Face Dust Masks	12 no.	12 no.
Paper Towels	Sufficient	Sufficient
De-icer	2 x 500ml	2 x 500ml
Animal Carcass Bags	10 no.	3 no.
Handwipes	Sufficient	Sufficient
Absorbent Granules	6 no. x 2kg bags	2 no. x 2kg bags
Powered debris blower	1 no.	1 no.
Digital Camera	1 no.	1 no.
Reflective waterproof jackets for use by stranded motorists	2 no.	2 no.
Reflective long sleeved vests for use by stranded motorists	-	-
Drain Rods	1 set	1 set
Claw hammer	1 no.	1 no.
Pointing Trowel	1 no.	1 no.
Manhole Lifting Keys	1 set	1 set
Handsaw	1 no.	1 no.
Wire Brush	1 no.	1 no.
Floating Trowel	1 no.	1 no.
Power Saw	1 no.	-
Stone Cutting Discs	6 no.	-
Metal Cutting Discs	6 no.	-
Shovels	2 no.	2 no.
Stiff Brush	1 no.	1 no.
Soft Brush	1 no.	1 no.
Spirit Level	1 no.	1 no.
Chainsaw with PPE	1 no.	-
Punner	1 no.	1 no.
Pickaxe	1 no.	1 no.
Bow Saw	1 no.	1 no.
Foam Ear Plugs	5 sets	5 sets

Equipment	Minimum Quantity	
	Vehicle Type 1	**Vehicle Type 2**
Safety Goggles	2 pairs	2 pairs
Paper Coveralls	4 pairs	4 pairs
Large torch	2 no.	2 no.
Spare batteries for torches	24 no.	24 no.
14lb Sledge hammer	1 no.	1 no.
Stilson wrench	1 no.	1 no.
Galvanised fence wire	1 roll	1 roll
Temporary fence with support	1 roll	-
Sequential road studs with charger and case	2 no. x set of 6	2 no. x set of 6
750 mm traffic cones	30 no.	10 no.
Cone lights	16 no.	6 no.
Spare batteries for cone light	16 no.	6 no.
Men at Work Signs	2 no.	2 no.
Road Narrows Signs	2 no.	2 no.
610 Arrows Signs	2 no.	2 no.
Road Closed Signs	4 no.	2 no.
Flooding Signs	4 no.	2 no.
Diverted Traffic Signs	5 no.	5 no.
Traffic Lights Inoperable Signs	4 no.	4 no.
Pedestrian Demand Unit Covers	8 no.	8 no.

APPENDIX 33/1 – STRUCTURAL INVESTIGATIONS TEST REQUIREMENTS

1 The following types of test may be required:

1.1 Site surveys/tests

(i) half cell potential survey,

(iv) cover survey,

(v) delamination /soundness survey,

(vi) exposing reinforcement,

(vii) depth of carbonation,

(viii) resistivity measurement,

(ix) initial surface absorption,

(x) ultrasonic pulse velocity survey, and

(xi) borescope or endoscope survey.

1.2 Chemical tests

(i) acid soluble chloride content,

(xii) water soluble chloride content,

(xiii) cement content/sulphate content/mix proportion,

(xiv) water/cement ratio,

(xv) alkali content, and

(xvi) alkali silica reaction samples.

1.3 Physical tests

(i) visual examination of cores,

(xvii) density and compressive strength,

(xviii) permeability,

(xix) aggregate grading,

(xx) petrographic examination,

(xxi) micro cracking assessment, and

(xxii) electron microscope examination.

2 Details of Site Tests

2.1 Potential Measurements

Potential measurements shall be carried out and recorded in the following manner:

(i) Half cell measurements shall be taken at 500 mm x 500 mm grid centres in areas proposed by the Operating Company and consented to in writing by the Overseeing Organisation,

(ii) The equipment shall be saturated copper sulphate half cell placed on the concrete surface and connected via a high-impedance voltmeter to the reinforcement,

(iii) The tests shall be carried out in accordance with the American Society for Testing and Materials C876-09. Two readings shall be taken at each node of the grid and the mean value used. Where the readings differ by more than 20 mV a third reading shall be taken and the mean of the two closest readings used,

(iv) Ambient conditions and concrete surface temperature shall be recorded together with details of the type of half cell and its most recent calibration check,

(v) Excavation to expose reinforcement for electrical connections shall be made good in accordance with the requirements of Series 1700,

(vi) Where appropriate permanent connections shall be made to the reinforcement to facilitate future monitoring of changes in potential,

(vii) The results shall be presented as a grid of values marked on projected plans or elevations of the areas measured at a scale of 1:50,

(viii) Potential contours shall also be plotted with colour coding at a scale of 1:50 with a contour interval of 50 mV, and

(ix) Colour block diagrams are not an acceptable alternative to colour contours.

2.2 Cover Survey

2.2.1 Cover surveys shall be carried out using an instrument complying with the requirements of and in the manner described in British Standard 1881- 204.

The lowest cover detected in each grid rectangle shall be recorded.

2.3 Delamination/Soundness Survey

Delamination/soundness surveys shall be carried out and recorded in the following manner:

(i) A visual survey shall be carried out and concrete defects such as spalling, cracking, crazing, honeycombing, surface deterioration and staining together with previous patching or remedial work shall be recorded,

(ii) Parts of the concrete which are suspected of being delaminated shall be tested by sounding with a light hammer,

(iii) The affected area shall be recorded and the results presented in the report, and

(iv) Photographic Records of typical defects shall be taken for the report.

2.4 **Exposing Bars**

Reinforcing bars shall be exposed in areas proposed by the Operating Company and consented to in writing by the Overseeing Organisation when the results of the potential tests are available:

(i) the cut-out shall not be greater than 100 mm diameter,

(ii) the cover to the bars and the condition of the reinforcement shall be recorded,

(iii) a photograph shall be taken of each bar and calliper measurements taken to establish the residual cross sectional area, and

(iv) the removal of concrete shall be carried out carefully so that no damage is caused to the reinforcement and over break shall be minimised.

2.5 **Carbonation Tests**

Tests for depth of carbonation using a phenolphthalein indicator as detailed in *Building Research Establishment Information paper IP/6/81 'Carbonation of concrete made with dense natural aggregates'* shall be carried out on core samples drill holes and where concrete is broken out either to examine the bars or connect the potential measuring apparatus to the reinforcement.

2.6 **Resistivity Survey**

Resistivity measurements shall be taken at locations and orientations where the half cell potential test has indicated that corrosion of reinforcing steel is most likely.

The test procedure shall be similar to that used for measuring soil resistivity using four electrodes temporarily attached to the concrete across which measurements of voltage and current shall be taken.

Details of the proposed testing equipment and method shall be proposed by the Operating Company and consented to in writing by the Overseeing Organisation prior to commencing the tests.

2.7 **Initial Surface Absorption**

Initial surface absorption test shall be carried out in accordance with British Standard 1881 Part 5.

2.8 **Ultrasonic Pulse Velocity Survey**

Ultrasonic pulse velocity surveys shall be carried out using equipment and procedures complying with British Standard EN 12504-4.

The purpose of this testing is the detection of defects and estimation of the depth of surface cracks using semi-direct or indirect transmission at grid centres not exceeding 150 mm.

The testing shall be carried out by suitably qualified personnel with previous experience in the interpretation of the survey results.

A water-soluble non-staining couplant shall be used and subsequently removed by power washing.

2.9 **Borescope Survey**

Experienced operatives shall be available to carry out borescope investigations.

The borescope shall also be fitted with a measuring graticule and a camera attachment and photographs shall be taken of typical defects.

2.10 **Endoscope Survey**

Experienced operatives shall be made available to carry out endoscope surveys.

The endoscope shall be fitted with a camera attachment and photographs shall be taken of typical defects.

3 **Chemical Tests**

3.1 Chloride content acid and water soluble tests shall be carried out in the following manner:

(i) Dust samples shall be removed from reinforced concrete members using a 20 to 25 mm diameter drill bit and the dust collected by a method described in *TRRL Technical Report 'Guide to Testing and Monitoring the durability of Concrete Structures' (by the Concrete Bridge Development Group – 2002)*,

(ii) Dust samples from the chloride drillings shall be taken at different depths into the concrete and shall be collected and stored in different containers for each depth range clearly labelled with the location depth range date and name of operator,

The depth ranges shall be 0 to 30mm, 30 to 60mm, 60 to 90mm and 90 to 120 mm.

Sufficient dust shall be collected at each depth range to enable both acid soluble and water soluble analysis to be carried out.

(iii) Chloride content shall be determined in accordance with British Standard 1881-124,

Samples from each depth range from each set of drillings shall be analysed for the "total" chloride content using the acid extraction method.

One sample from the 90 to 120mm depth range for each set of drillings shall be analysed for the "free" chloride content using the water extraction method.

Where the sample from the 90 to 120mm depth range are insufficient or unsuitable the "free" chloride analysis may be carried out on a sample obtained from one of the other depth ranges from the same set,

and,

(iv) Results shall be given in terms of chloride ion by % cement content.

The average cement and sulphate content shall be measured from the analysis of 10% of the drilling samples.

The location of the drillings shall be determined from the potential measurement plots.

The exact position shall be determined to avoid reinforcing steel by locating the steel with a cover meter.

3.2 Cement content, sulphate content, mix proportions, water/cement ratio and alkali content testing shall be determined in accordance with British Standard 1881-124 on samples obtained from cores.

3.2.1 Alkali silica reaction samples shall be carried out in the following manner:

(i) Cores shall be drilled at locations proposed by the Operating Company and consented to in writing by the Overseeing Organisation,

The cores shall be 75mm diameter drilled to a depth of 400mm.

Intact cores at least 300mm long shall be required.

(ii) Samples taken from the cores shall be tested for susceptibility of the coarse and fine aggregates to alkali silica reaction,

(iii) The equivalent sodium oxide content shall also be determined for each core. Petrographic examination shall also be carried out as described in this Appendix, and

(iv) If alkali silica reaction is suspected the Operating Company may propose for the written consent of the Overseeing Organisation that the cores be subject to accelerated expansion tests in accordance with the *Concrete Society Technical Report 'Minimising the risk of damage to concrete' (CS TR 30),* measurements to be continued up to 1 year with interim reports at 3 monthly intervals.

4 Physical Tests

4.1 Examination of cores density and compressive strength tests shall be carried out in accordance with British Standard EN 12504-1.

Visual examinations shall be carried out on all core samples before preparing the samples for testing.

Density and compressive strength tests shall be carried out on 100mm diameter cores.

4.2 Permeability shall be determined by means of the capillary absorption test in accordance with British Standard 1881-5 on samples from cores.

4.3 Aggregate Grading shall be determined in accordance with British Standard 1881-124 on samples obtained from cores.

4.4 Petrographic Examination shall be carried out in the following manner:

(i) Petrographic Examination shall be carried out in accordance with American Society for Testing and Materials C856-04 'Standard Practice for Petrographic Examination of Hardened Concrete' on sections obtained from 75mm diameter cores,

(ii) The sections shall be obtained from the cores taken for expansion tests for alkali-silica reaction, and

(iii) Constituent materials shall be identified and a description of the specimen given together with a photograph typically at a magnification of 50 times.

4.5 Microcracking Assessment shall be carried out in the following manner:

(i) Selected core samples shall be cleaned of any extraneous debris and air dried in the laboratory, and

(ii) They shall then be sprayed with a fluorescent penetrant solution (a dispersion of fluorescent particles in an organic liquid).

5 When the excess solution has drained from the surface the core samples shall be viewed under ultra-violet light.

4.6 Electron Microscope Examination shall be carried out in the following manner:

(i) Where examination of a sample for microcracking alkali silica reaction susceptibility petrographic analysis or any other purpose indicates that some form of deleterious reaction may be present in the concrete the Overseeing Organisation may instruct examination by electron microscope.

6 Appropriate pieces of the sample which may take the form of thin sections, finely ground sections, off-cuts or freshly broken surfaces shall be explored with the electron microscope to confirm the presence of the constituents or products of deleterious reactions and to identify them wherever possible.

7 A written report shall be submitted with electron micrographs (typically at a magnification of 3500 to 5000 times) and results of analysis of the matrix with the microprobe.

5 Report Requirements

5.1 All reports shall be submitted for the consent off the Overseeing Organisation.

5.2 Interim reports shall comply with the following:

(i) An interim report shall be submitted for each part of a Structure to be investigated within one week of completion of site testing showing the results of all surveys and tests carried out on site. Copies of field measurements with suitable explanatory notes are adequate.

8 Chloride content analysis shall be presented within fourteen days of sampling.

9 Three copies of each interim report are required.

5.3 Final reports shall comply with the following:

(i) Irrespective of size which shall dictate the number of volumes, the final report shall be submitted in two sections.

10 Section 1 of the final report shall be submitted within three weeks of completion of Site work and shall contain the following information where applicable:

(a) A description of the testing programme and tests carried out a presentation of the results in the form outlined below and a summary of the results,

(b) The results shall be presented as follows plotted to a scale of 1:50 unless otherwise instructed, and

half cell potential/ cover	(i)	tabular
	(ii)	colour coded contour plans/elevations to indicate chloride content distribution of results with a contour interval of 50 mV
delamination/ soundness	(i)	plan/elevation marked with suspect areas
	(ii)	colour print of major Defects
petrographic	(i)	colour prints of each section
	(ii)	detailed description of section with particular reference to alkali silica reaction
ultrasonic pulse	(i)	typical graphs/computer output to demonstrate velocity and interpretation of results
	(ii)	plans/elevations/cross sections to show Defects detected

electron microscope	(i)	electron micrographs
	(ii)	detailed description of section together with results of microprobe analysis
borescope	(i)	developed elevations of internal surface of holes examined
	(ii)	enlarged colour prints of typical Defects
endoscope	(i)	plans/elevations/cross sections to show location of fibroscope and direction of view of photographs
	(ii)	enlarged colour prints of typical Defects and other photographs

(c) All results shall be presented in tabular form and histograms shall be produced where appropriate.

(v) Section 2 of the final report shall contain a written discussion and interpretation of the results of the survey and testing with recommendations in writing to the Overseeing Organisation for remedial work.

(vi) A draft copy of the report shall be submitted for the written consent of the Overseeing Organisation before production of the final report.

6 Addendum Reports

6.1 The results of the alkali silica reaction expansion test shall be reported on a 3 monthly basis.

6.2 An Addendum Report shall be produced to cover all the expansion test results.

APPENDIX 50/1 – (SPECIFICATION FOR HIGHWAY WORKS) FORM HA/P1 (MAINTENANCE) PAINT SYSTEM SHEET

1. CONTRACT TITLE: STRUCTURE NO: GRID REF:
2. DATE OF ISSUE OF DOCUMENTS TO TENDERERS:
3. ENVIRONMENT AND ACCESSIBILITY:
4. EXISTING PROTECTIVE SYSTEM(S): Metal coatings: Paint coatings: Average total thickness (microns):

5. REQUIRED DURABILITY OF SYSTEM: NO MAINTENANCE: ……YEARS MINOR MAINTENANCE: ……YEARS MAJOR MAINTENANCE:…….YEARS (Ref: NG.5008.5 sub-para (iii))	6. COLOUR OF FINISH:

7. BILLED AREA		8. PROTECTIVE SYSTEM TYPE: (eg. I (M), II (M), III (M), etc):
REF: AREA DESCRIPTION:	SURFACE PREPARATION METHOD	

9. PAINT COAT SUMMARY	CONDITION OF SURFACES OF EXISTING SYSTEM AFTER SURFACE PREPARATION							
	Condition: Area Ref.		Condition: Area Ref.		Condition: Area Ref.		Condition: Area Ref.	
COAT & ITEM NO.	mdft	B or AS	mdft	B or AS	mdft	B or AS	mdft	B or AS
1st Coat: Item								
2nd Coat: Item								
3rd Coat: Item								
4th Coat: Item								
MINIMUM TOTAL DFT TO BE OBTAINED								

10. DETAILS				
	1st Coat	2nd Coat	3rd Coat	4th Coat
Registered Description				
Item No. and Colour				
BBA HAPAS Roads and Bridges Certificate Reference				
Date Registered				
Brand Name and Manufacturer's ref. No.				
Manufacturer's Data Sheet No.				
Minimum dry film thickness (mdft) (µm)				
Maximum local dft (See sub–clause 5012.6) (µm)				
Estimated total volume of paint likely to be used. (litres)				
'A' type testing required (YES/NO) (See sub–clause 5009.3)				
'B' type testing required (YES/NO) (See sub–clause 5009.11)				
11. STRIPE COAT(S) DESCRIPTION (Including Item No. and colour)				
12. PATCH COAT(S) DESCRIPTION (Including Item No. and colour)				
13. ADDITIONAL INFORMATION (By Paint Manufacturer)				
14. PAINT MANUFACTURER'S OFFICIAL STAMP:				

15. Mdft (µm)	16. APPROVED BY:
NOTE. The minimum total dry film thickness (mdft) of the paint system, neglecting primers and sealers under 30 microns, shall be 15% greater (to the nearest 25 microns) than the sum of the mdfts of the individual paint coats. For example, if the sum of the mdfts is 270, 15% (ie 40) is added, which gives a total of 310 microns. The nearest 25 microns is 300, as opposed to 325, so the total is 300 microns.	DATE

Note:

1 The Operating Company shall complete the paint system sheet HA/P1 for maintenance painting of steelwork.

A separate form should be provided for each Structure, including CCTV masts, cantilever masts, street lighting columns and bracket arms if appropriate.

A separate form shall also be provided for each element of the Forth Road Bridge or Queensferry Crossing including:-

- Suspended span
- Approach viaduct steelwork
- Towers
- Main cables
- Hangers
- Ballustrades, handrails and footplates

2. The compiler shall refer to the notes under the example Appendix 50/1 in the *Notes for Guidance on the Specification of Highway Works* and *National Alterations of the Overseeing Organisation of Scotland*.

APPENDIX 50/3 – (SPECIFICATION FOR HIGHWAY WORKS) FORM HA/P2 PAINT DATA SHEET

BBA HAPAS Road & Bridges Certificate Reference and Date:

Manufacturer :

Item No. :

Registered Description :

Brand Name and Reference No. :

Consistency and Method of Application :

Weight per 5 Litres (kg) :

Specific gravity: Colour :

For two-pack paints :

Base: Activator: Mixed components:

Volume Solids % :

For two-pack paints volume solids % for mixed paint:

VOC content g/l (mixed) :

Manufacturer's Minimum Dry Film Thickness Range

Recommended lower mdft :

Recommended upper mdft :

Full Application Instructions :

Mix ratio :

Flash Point :

Temperature		5°C	10°C	20°C	30°C
Drying Times (hours)	Surface Dry				
	Hard Dry				
Overcoating Times (hours)	Minimum				
	Maximum				
Pot Life (hours)					

Cleaning Solvent/thinner :

State effects on Drying Times of Temperatures below 20°C :

Manufacturer's Application Restrictions,

e.g. for Temperatures or Humidity :

Manufacturer's General Recommendations :

Note:

The Operating Company shall complete the paint system sheet HA/P2 for maintenance painting of steelwork.

APPENDIX 50/4SE – (SPECIFICATION FOR HIGHWAY WORKS) FORM SEDD/P3 PAINT SAMPLE DESPATCH LIST

SHEET 1

Contract Title :

Structure Name : Structure No:

Client Name : (Overseeing Organisation or other company)

Supervising Firm :

Supervising Firm's Representative Name: Tel No:

Address : Fax No:

Painting Inspection Firm :

Samples Despatched From: (Note 1) Date Despatched:

Inspector's Name : Tel No:

Inspector's Signature :

SAMPLES: (Numbered A1, A2 etc. or B1, B2 etc.) (Note 2)					
Sample No.	Item No.	Manufacturer's Reference No.	Batch No	Colour BS 4800 reference (Note 3)	Sp.G. (Notes 4 & 5)

Paint Manufacturer :

SHEET 2

PROCEDURES

To be followed closely before despatch of paints to Scientifics Ltd or an approved local paint testing firm:

1 Check the specific gravity of each batch of paint.

2. Check the matching of finish colours to BS 4800.

3. Select the required sample, i.e.:

   (i) 'A' sample – unopened tin, and

   (ii) 'B' sample – 500 ml sample from painter's kettle or from nozzle of airless spray gun in the case of single component coatings or if the check is to be done in situ otherwise for two pack coatings separate samples of the base and the activator must be dispatched to the testing laboratory.

4. List contract details and details of each set of samples, including the specific gravity of each sample in Sheet 1 SEDD/P3.

5. Send Form HA/P1 Paint System Sheet with Form SEDD/P3 to the following:

   (i) Scientifics Ltd, 500 London Road, Derby, DE24 8BQ or an approved local paint testing firm, and

   (ii) The Director, Buchanan House, 58 Port Dundas Road, Glasgow,G4 0HF.

6. The Operating Company shall despatch samples to 5 (i) above.

   The Operating Company shall label samples correctly, clip lids of tins down securely and send the samples promptly.

   Samples shall be labelled with this Contract title, structure name, sample number, and additionally in the case of 'B' samples, item number, manufacturer's reference number, batch number and colour.

   Results will be notified by the Director, as soon as they become available.

Notes:

1 State whether from workshop or Site (give name and address).

2. Batch samples comprising unopened tins to be marked A1, A2, etc. Control samples in 0.5 litre tins to be marked B1, B2, etc. Samples No. to run consecutively, i.e. A1 and B1 onwards.

3. Colour reference to BS 4800 to be given, as stated on Form HA/P1 (Maintenance) Paint System Sheet, e.g. 18 B 25.

4. For 'A' samples specific gravity (Sp.G.) to be measured by the inspector from separate tins of the same batch. For 'B' samples Sp.G. to be measured by Inspector when taking samples. Samples will be rejected unless Sp.G. is filled in above by Inspector.

5. If Sp.G. differs appreciably from data sheet do not dispatch 'A' or 'B' samples.

6. The Operating Company shall complete the paint system sheet SEDD/P3 for maintenance painting of steelwork.

APPENDIX 50/5 – GENERAL REQUIREMENTS

1 It is the Operating Company's responsibility to ensure that all work is carried out within the provision of the *Health and Safety at Work Act 1974*, or any further Act, with particular reference to the removal of lead based paint by grit blasting. All work shall as a minimum be in compliance with *The Control of Lead at Work Regulations 1998*; the *HSE Approved Code of Practice (COP2)*, published in 1998; and the *COSHH Regulations* (1999). The Operating Company shall also consult and comply with the requirements of Scottish Environment Protection Agency, Marine Scotland, the local authorities' Environmental Health Officer, the Health and Safety Executive and other Operational Partners.

2 Unless otherwise consented to by the Overseeing Organisation, the Operating Company shall provide full containment to prevent any dust, debris, water spray or any other materials falling on and/or affecting watercourses, vehicles, persons or any other public or private property or carriageway in use either on or adjacent to the Site during all maintenance painting Operations.

3 Unless otherwise consented to by the Overseeing Organisation, re-painting of the hangers on the Forth Road Bridge shall be undertaken using Gulf Metalcoat A30 or equivalent. Gulf Metalcoat A30 or equivalent shall be supplied, stored and used in accordance with the manufacturers written instructions including all measures necessary for the control of substances which are potentially harmful to health. The Operating Company shall complete Form HA/P1 (Maintenance) Paint System Sheet parts 1 to 9 as set out in Appendix 50/1 which shall confirm the method of surface preparation.

4 The Gulf Metalcoat A30 shall be applied using gloves to apply the paint to the hangers.

APPENDIX 62/1 – REQUIREMENTS FOR PROFESSIONAL SERVICES

Requirements for Professional Services Staff

For roles requiring professional qualifications, a non-UK professional qualification awarded by an appropriate engineering institution which, in the opinion of the UK Engineering Council is Chartered Engineer equivalent, may be acceptable to the Overseeing Organisation. For non-engineering professional qualifications, evidence of UK equivalence shall be provided.

A non-UK academic qualification in an appropriate discipline, which is acknowledged by UK academic institutions to be of equivalent standing, may also be acceptable to the Scottish Ministers. Where non-UK qualifications are proposed, evidence of UK equivalence must be provided. Where a degree in an appropriate discipline is specified, either Masters, Honours or Ordinary level is acceptable.

1 Scheme Manager

1.1 Role

The role of a Scheme Manager shall be the overall management and direction of the Operating Company's staff with overall responsibility to the Scottish Ministers for their activities and deliverables.

1.2 Qualifications

The Scheme Manager shall be a Chartered Engineer awarded by an appropriate UK engineering institution including the Institution of Civil Engineers, the Institution of Structural Engineers, the Institute of Highway Engineers and the Chartered Institution of Highways and Transportation. A non-UK professional qualification awarded by an appropriate engineering institution which in the opinion of the UK Engineering Council is CEng equivalent may also be acceptable to the Scottish Ministers. It is unlikely that anyone with less than 15 years' experience relevant to the position and performance of the role will meet the requirements for this post.

1.3 Key Tasks

The key tasks of a Scheme Manager shall be to:

(i) manage the relationship between the Operating Company's staff and the Overseeing Organisation, and to ensure that the Scottish Ministers' Requirements are satisfied,

(ii) ensure that the Operating Company's Key Staff fulfil their responsibilities with the required degree of skill care and diligence and to ensure that the necessary Operating Company's Key Staff and resources are properly deployed to meet the Scottish Ministers' Requirements,

(iii) ensure that the Operating Company's staff seek continuous improvement in their processes and effectiveness,

(iv) manage this Contract in accordance with the Management System including the Quality Plan,

(v) certification of Design,

(vi) seek and utilise the Overseeing Organisation's feedback on their assessment of performance of the Operating Company's staff,

(vii) ensure that liaison is maintained between the respective senior management of the Scottish Ministers, the Operating Company and any sub-consultants,

(viii) monitor and report to the Overseeing Organisation on the performance of the Operations against the time, budget and quality, targets of this Contract and Orders, and

(ix) ensure that Operating Company's staff are conversant with and understand the relevant Operations required under the provisions of this Contract.

1.4 **Specific Tasks Knowledge and Experience Required**

The specific tasks, knowledge and experience of a Scheme Manager are:

(i) to present Scheme proposals at value for money workshops and presentations to senior management of Transport Scotland,

(ii) Trunk Road promotion and the relevant Legislation in particular the *Roads (Scotland) Act 1984*,

(iii) Scottish Government procedures for the preparation and publication of the relevant statutory road and compulsory purchase orders,

(iv) Public Local Inquiry procedures (the Scheme Manager shall have direct experience in appearing as a witness on behalf of the Promoter at Public Local Inquiries),

(v) Design and specification of major bridge and road Schemes using the DMRB and associated documents and, if subject to an Order, the Scottish Government's Alternative Tendering Initiative,

(vi) preparation of contract documents for Schemes using the approved forms of procurement referred to in this Contract,

(vii) monitoring and control of programming and financial aspects of Schemes,

(viii) implementation of the relevant environmental Legislation and its requirements for Trunk Road Schemes,

(ix) to assist the Operating Company Representative in presenting Scheme proposals at value for money workshops and presentations to senior management of Transport Scotland. The Scheme Manager will also be required to take the lead in explaining proposals to the general public and other interested/affected parties at public exhibitions and during the course of public consultations during Scheme preparation, and

(x) possession of a high standard of presentational and communication skills.

2 Senior Project Engineer

2.1 Role

The role of a Senior Project Engineer shall be the day to day management and direction of the Operating Company's staff with responsibility to the Scheme Manager for their activities and deliverables.

2.2 Qualifications

A Senior Project Engineer shall be a Chartered Engineer awarded by an appropriate UK engineering institution including the Institution of Civil Engineers, the Institution of Structural Engineers, the Institute of Highway Engineers and the Chartered Institution of Highways and Transportation or a corporate member of an appropriate engineering institution/organisation acceptable to the Scottish Ministers. It is unlikely that anyone with less than 10 years' experience relevant to the position and performance of the role will meet the requirements for this post. Experience alone will not be acceptable for this role.

2.3 Key Tasks

The key tasks of a Senior Project Engineer are to:

(i) assist the Scheme Manager in the performance of the Scheme Manager's duties under this Contract,

(ii) liaise with the Overseeing Organisation and implement the requirements of this Contract as set out in this Contract and as amended from time to time by the Scottish Ministers,

(iii) manage the Operating Company's staff in order that the requirements of this Contract are achieved on time, within budget and to the quality required by the Management System including the Quality Plan,

(iv) certification of Design,

(v) ensure that the implications of all current Legislation are incorporated in the deliverables under this Contract,

(vi) ensure that all Operations are carried out to the relevant standards as specified in this Contract, and

(vii) supervise the procurement of such Operations which require to be sourced externally.

2.4 Specific Tasks Knowledge and Experience Required

The specific tasks knowledge and experience required of a Senior Project Engineer are:

(i) preparation of Road Orders, Schemes and Compulsory Purchase Orders and associated documents and negotiation with affected parties and objectors,

(ii) the procedural and legislative background to the promotion of road and compulsory purchase orders and the procedural aspects and requirements of Public Local Inquiries and in particular the effects that this shall have on Scheme programming or preparation of Operations,

(iii) consulting individuals and organisations affected by Trunk Road Schemes,

(iv) the Design and Specification of Trunk Roads including the preparation of contract documents for Schemes,

(v) traffic modelling (including microscopic modelling),

(vi) environmental and economic assessment,

(vii) computer aided Structures and roads Design,

(viii) practical working knowledge and experience of the DMRB and associated documents and the Manual of Contract Documents for Highway Works,

(ix) preparation of documentation for ground investigation including the preparation of orders, briefs, Statements of Intent, reports, and topographical survey contracts,

(x) procurement of ground, topographic and other investigation contracts, including tender procedures, tender assessment and reporting,

(xi) translating Design requirements into employer's requirements into contracts,

(xii) preparation of contract documents,

(xiii) assisting the Director with tender procedures, assessment and reporting for Works Contracts,

(xiv) knowledge of current advertising procedures of the Official Journal of the European Union (OJEU),

(xv) experience of financial control and programme management of Trunk Road Schemes, and

(xvi) knowledge of the relevant environmental Legislation and the impact that its requirements shall have on the activities or programming of Schemes.

3 Principal Crossings Principal Structural Engineer

3.1 Role

The Principal Crossings Principal Structural Engineer shall be responsible to the Scheme Manager for the production of all Design, procedural or other Operations required to secure the preparation or promotion of Schemes relating to the Queensferry Crossing or Forth Road Bridge.

3.2 Qualifications

A Principal Crossings Principal Structural Engineer shall:

(i) be a Chartered Civil or Structural Engineer with substantial experience of cable supported bridges, procedural or other work for major Structures of the size and complexity of the Queensferry Crossing and Forth Road Bridge. It is unlikely that anyone with less than 15 years' experience in the design and specification of cable supported structures to the DMRB will meet the requirements for this post. Experience alone will not be acceptable for this role,

(ii) have extensive experience in the production of outline preliminary and detailed designs for cable supported bridges and of the assessment of contractor's design proposals including construction methods, and

(iii) have experience in the drafting of contract documents for both "employer's Design" and "Design and build" contracts for cable supported bridges.

3.3 Key Tasks

The key tasks of a Principal Crossings Principal Structural Engineer are to:

(i) assist the Scheme Manager in the performance of the Scheme Manager's duties under this Contract,

(ii) liaise with the Overseeing Organisation and implement the requirements of this Contract as set out in this Contract and as amended from time to time by the Scottish Ministers,

(iii) manage the Operating Company's staff in order that the requirements of this Contract are achieved on time, within budget and to the quality required by the Management System including the Quality Plan,

(iv) Certification of Design,

(v) ensure that the implications of all current Legislation are incorporated in the deliverables under this Contract,

(vi) ensure that all Operations are carried out to the relevant standards as specified in this Contract, and

(vii) supervise the procurement of such Operations which require to be sourced externally.

3.4 Specific Tasks Knowledge and Experience Required

The specific tasks knowledge and experience required of a Principal Crossings Principal Structural Engineer shall be to:

(i) to provide expert analysis, advice, support and recommendations on any structural matters associated with the Queensferry Crossing or Forth Road Bridge as and when required,

(ii) consulting individuals and organisations affected by Schemes,

(iii) the Design and specification of Structures related Design including the preparation of contract documents for employer's Design and Design and build Schemes,

(iv) the Design and specification of Operations and Works Contracts,

(v) practical working knowledge of the DMRB and associated documents and the Specification for Highway Works,

(vi) translating Design requirements into employer's requirements,

(vii) preparation of contract documents, carrying out of the Overseeing Organisation's tender procedures (including use of the documentation as referred to in Schedule 6 Part 1 of this Contract and if subject to an Order the use of the Alternative Tendering Initiative) assessment and reporting for both "Employer's Design" and "Design and build" form of contract,

(viii) assisting the Overseeing Organisation with tender procedures, assessment and reporting for Works Contracts,

(ix) knowledge of current advertising procedures of the Official Journal of the European Union (OJEU),

(x) experience of financial control and programme management of Trunk Road Schemes, and

(xi) knowledge of the relevant environmental Legislation and the impact which its requirements shall have on the activities and programming of Schemes.

4 Principal Crossings Structural Engineer

4.1 Role

A Principal Crossings Structural Engineer shall be responsible to the Principal Crossings Principal Structural Engineer for the production of all Design, procedural or other Operations required to secure the preparation or promotion of Schemes relating to the Queensferry Crossing or Forth Road Bridge.

4.2 Qualifications

A Principal Crossings Structural Engineer shall:

(i) be a Chartered Civil or Structural Engineer with extensive experience of cable supported bridges, procedural or other work for major structures of the size and complexity of the Queensferry Crossing and Forth Road Bridge. It is unlikely that anyone with less than 10 years' experience in the design and specification of cable supported structures to the DMRB will meet the requirements for this post. Experience alone will not be acceptable for this role,

(ii) have extensive experience in the production of outline preliminary and detailed designs for cable supported bridges and of the assessment of contractor's design proposals including construction methods, and

(iii) have experience in the drafting of contract documents for both employer's Design and Design and build contracts for cable supported bridges.

4.3 **Key Tasks**

The key tasks of a Principal Crossings Structural Engineer shall be to:

(i) assist the Principal Crossings Principal Structural Engineer in the performance of the Principal Crossings Principal Structural Engineer's duties under this Contract,

(ii) manage the Operating Company's staff in order that the requirements of this Contract are achieved on time, within budget and to the quality required by the Management System including the Quality Plan,

(iii) provide expert analysis, advice, support and recommendations on any structural matters associated with the Queensferry Crossing or Forth Road Bridge as and when required

(iv) Design and specification of Structures related Design including the preparation of contract documents for "employer's Design" and "Design and build" Schemes,

(v) Design and specification of Operations and Works Contracts,

(vi) have practical working knowledge of the DMRB and associated documents and the Specification for Highway Works,

(vii) translate Design requirements into employer's requirements,

(viii) preparation of contract documents, carrying out of Overseeing Organisations' tender procedures (including use of the documentation as referred to in Schedule 6 Part 1 of this Contract and if subject to an Order the use of the Alternative Tendering Initiative) assessment and reporting for both "employer's Design" and "Design and build" form of contract,

(ix) have knowledge of advertising procedures of the Official Journal of the European Union (OJEU),

(x) have experience of financial control and programme management of Trunk Road Schemes, and

(xi) have knowledge of the relevant environmental Legislation and the impact which its requirements shall have on the activities and programming of Schemes.

5 Structural Engineer

5.1 Role

A Structural Engineer shall be responsible to the Senior Project Engineer or the Principal Crossing Principal Structural Engineer for the production of all design, procedural or other Operations required to secure the preparation or promotion of Schemes.

5.2 Qualifications

A Structural Engineer shall:

(i) be a Chartered Civil or Structural Engineer It is unlikely that anyone with less than 7 years' experience (with at least 4 of these since becoming chartered) in the design and specification of road structures to the DMRB will meet the requirements for this post. Experience alone will not be acceptable for this role,

(ii) have extensive experience in the production of outline preliminary and detailed designs and of the assessment of contractor's design proposals, and

(iii) have experience in the drafting of the structural elements of contract documents for both employer's design and design and build contracts.

5.3 Key Tasks

The key tasks of a Structural Engineer shall be to:

(i) the Design and specification of Structures related Design including the preparation of contract documents for employer's Design and Design and build Schemes,

(ii) the Design and specification of Operations and Works Contracts,

(iii) practical working knowledge of the DMRB and associated documents and the Specification for Highway Works,

iv) translating Design requirements into employer's requirements,

(v) preparation of contract documents, carrying out of the Overseeing Organisations' tender procedures (including use of the documentation as referred to in Schedule 6 Part 1 of this Contract and if subject to an Order the use of the Alternative Tendering Initiative) assessment and reporting for both Employer's Design and Design and build form of contract,

(vi) knowledge of advertising procedures of the Official Journal of the European Union (OJEU),

(vii) experience of financial control and programme management of Trunk Road Schemes, and

(viii) knowledge of the relevant environmental Legislation and the impact which its requirements shall have on the activities and programming of Schemes.

6. Roads Engineer

6.1 Role

A Roads Engineer shall:

(i) be responsible to the Senior Project Engineer or the Principal Crossing Principal Structural Engineer for the production of all design, procedural or other Operations required to secure the preparation or promotion of Schemes,

(ii) prepare or promote Schemes,

(iii) produce road Designs, incorporating environmental mitigation measures, where appropriate,

(iv) prepare statutory orders,

(v) procure external surveys and services, and

(vi) ensure the Design obligations with respect to this Contract are delivered by the Operating Company.

6.2 Qualifications

A Roads Engineer shall:

(i) be a corporate member of the Institution of Civil Engineers, the Institution of Structural Engineers, the Institute of Highway Engineers or the Chartered Institution of Highways and Transportation or other engineering institution/ organisation acceptable to the Scottish Ministers. It is unlikely that anyone with less than 7 years' experience of roads Design and specification to the DMRB and the Manual of Contract Documents for Highway Works will meet the requirements for this post,

(ii) have experience in traffic modelling and all aspects of computer aided roads design,

(iii) have experience in the preparation and publication of draft road and compulsory purchase orders,

(iv) have knowledge and experience of the Overseeing Organisations' procedures, and

(v) have experience in preparing contract documents for road Schemes including employer's requirements for employer's Design and Design and build contracts for major road Schemes.

6.3 Key Tasks

The key tasks of a Roads Engineer are to:

(i) assist the Senior Project Engineer in the performance of the Senior Project Engineer's duties under this Contract,

(ii) liaise with the Overseeing Organisation as required,

(iii) supervise junior staff engaged in Design or preparation activities,

(iv) provide expert advice support and recommendations on any matters associated with all Design, Operations or maintenance relating to the Unit from time to time as or when required by the Scheme Manager or the Overseeing Organisation or as required in the provision or performance of this Contract,

(v) ensure that all Operations are undertaken in accordance with current standards as specified in this Contract,

(vi) ensure compliance with the Overseeing Organisations' procedures, and

(vii) procure services that require to be sourced externally.

6.4 Specific Tasks Knowledge and Experience Required

The specific tasks knowledge and experience required of a Roads Engineer shall be:

(i) to assist in the preparation of draft orders and negotiation with affected parties and objectors,

(ii) to assist in the procedural and legislative background to the promotion of road and compulsory purchase orders and the procedural aspects and requirements of Public Local Inquiries, in particular the effects that this shall have on Scheme programming and preparation of Operations,

(iii) to assist in consulting individuals and organisations affected by Trunk Road Schemes,

(iv) the Design and Specification of Trunk Roads including the preparation of contract documents for employer's Design and Design and build Schemes,

(v) the Design and specification of Operations and Works Contracts,

(vi) the Design and specification of accident investigation and prevention schemes including the preparation of Route Accident Reduction Plans,

(vii) traffic modelling (including microscopic modelling), environmental and economic assessment, and computer aided roads Design,

(viii) practical working knowledge of the DMRB and associated documents and the Specification for Highway Works,

(ix) preparation of documentation for ground investigation (including the preparation of orders, briefs, Statements of Intent and report) and topographical survey contracts,

(x) procurement of ground, topographic and other investigation contracts including tender procedures, tender assessment and reporting,

(xi) translating Design requirements into employer's requirements,

(xii) preparation of contract documents, carrying out of the Overseeing Organisations' tender procedures (including use of the documentation as referred to in Schedule 6 Part 1 of this Contract and if subject to an Order the use of the Alternative Tendering Initiative) assessment and reporting for both employer's Design and Design and build form of contract,

(xiii) knowledge of advertising procedures of the Official Journal of the European Union (OJEU),

(xiv) experience of financial control and programme management of Trunk Road Schemes, and

(xv) knowledge of the relevant environmental Legislation and the impact which its requirements shall have on the activities and programming of Schemes.

7. Graduate Engineer

7.1 Role

The role of a Graduate Engineer shall be to assist and support the Operating Company engineer(s) in the delivery of their tasks.

7.2 Qualifications

A Graduate Engineer shall possess a degree or post-graduate degree in Civil or Structural Engineering or other discipline appropriate to the individual role and acceptable to the Overseeing Organisation, with experience relevant to the provision and performance of this Contract will meet the requirements for this post.

7.3 Key Tasks

The key tasks of a Graduate Engineer shall be to:

(i) liaise with the Operating Company's staff to ensure issues arising from Operations are fully understood or implemented in accordance with the requirements of this Contract,

(ii) develop and carry out Designs and document preparation in accordance with this Contract,

(iii) develop and manage technical studies and investigations,

(iv) assist in preparing deliverables from the Operating Company including:

(a) reports,

(b) Design,

(c) tender documents including:

(i) drawings,

(ii) calculations,

(iii) specifications,

(iv) bills of quantities, and

(v) hold points,

(d) surveys, and

(e) to manage information distribution to and from the Operating Company.

8. Senior Technician

8.1 Role

The role of a Senior Technician shall be to support the Operating Company's technical team.

8.2 Qualifications

A Senior Technician shall be an Incorporated Engineer or possess an academic qualification in an appropriate discipline recognised by the UK Engineering Council as an exemplifying qualification for Incorporated Engineer and acceptable to the Overseeing Organisation. It is unlikely that anyone with less than 5 years' experience relevant to the position and performance of the role will meet the requirements for this post.

8.3 Key Tasks

The key tasks of a Senior Technician shall be:

(i) to liaise with colleagues on technical issues,

(ii) to liaise with colleagues to ensure issues arising from Operations are fully understood or implemented in accordance with the requirements of this Contract,

(iii) to develop Designs and document preparation in accordance with this Contract,

(iv) to assist in preparing deliverables from the Operating Company including:

(a) reports,

(b) Design,

(c) tender documents including:

(i) drawings,

(ii) calculations,

(iii) specifications,

(iv) bills of quantities,

(v) hold points, and

(vi) schedules,

(d) surveys, and

(e) managing information distribution to and from the Operating Company.

9. Technician

9.1 Role

The role of a Technician shall be to support the Operating Company's technical team.

9.2 Qualifications

A Technician shall be an Engineering Technician or possess a post secondary academic qualification in an appropriate discipline acceptable to the Overseeing Organisation. It is unlikely that anyone with less than 2 years' experience relevant to the position and performance of the role will meet the requirements for this post.

9.3 Key Tasks

The key tasks of a Technician shall be:

(i) to liaise with colleagues on technical issues,

(ii) to liaise with colleagues to ensure issues arising from Operations are fully understood or implemented in accordance with the requirements of this Contract,

(iii) to develop Designs and document preparation in accordance with this Contract,

(iv) to assist in preparing deliverables from the Operating Company including:

(a) reports,

(b) Design,

(c) tender documents including:

(i) drawings,

(ii) calculations,

(iii) specifications,

(iv) bills of quantities,

(v) hold points, and

(vi) schedules,

(d) surveys, and

(e) managing information distribution to and from the Operating Company.

10. Junior Technician

10.1 Role

The role of a Junior Technician shall be to support the Operating Company's technical team.

10.2 Qualifications

A Junior Technician shall be an Engineering Technician or Student Engineer, including summer student and undergraduate course student placement, with experience relevant to the position and performance of the role.

10.3 Key Tasks

The key tasks of a Junior Technician shall be:

(i) to liaise with colleagues on technical issues,

(ii) to liaise with colleagues to ensure issues arising from Operations are fully understood or implemented in accordance with the requirements of this Contract,

(iii) to develop Designs and document preparation in accordance with this Contract, and

(iv) to assist in preparing deliverables from the Operating Company including:

(a) reports,

(b) Designs,

(c) tender documents including:

(i) drawings,

(ii) calculations,

(iii) specifications,

(iv) bills of quantities,

(v) hold points, and

(vi) schedules,

(d) surveys, and

(e) managing information distribution to and from the Operating Company.

11. Principal Specialist

11.1 Role

The role of a Principal Specialist shall be to provide expert advice, support and recommendations on any matters associated with major cable supported bridges including cables, anchorages, structural steelwork, surfacing, Structural Health Monitoring and mechanical and electrical systems together with traffic measurement, geotechnical surveys, topographical surveys, environmental obligations and Legislation or landscaping obligations and Legislation in terms of analysis and verification related to this Contract.

11.2 Qualifications

A Principal Specialist shall be a Chartered Engineer or hold a recognised professional qualification or high level corporate membership of a professional organisation appropriate to the specialist role. A Principal Specialist shall hold one or more qualifications from the following non-exhaustive list including Member of the Institution of Civil Engineers, Member of the Institution of Structural Engineers, Member of the Institution of Mechanical Engineers, Member of the Institution of Electrical Engineers, Fellow of the Institute of Environmental Management & Assessment, Fellow of the Institution of Water and Environmental Management, Chartered Environmentalist, Chartered Geologist, Fellow of the Landscape Institute, Chartered Member of the Landscape Institute or professional qualifications from other institutions of equal standing relevant to surveyors, architects, builders, foresters and ecologists as appropriate to the specialist role and acceptable to the Overseeing Organisation. It is unlikely that anyone with less than 15 years' experience relevant to the position and performance of the role will meet the requirements for this post.

11.3 Key Tasks

(a) Key tasks for a Principal Cable Supported Bridge Specialist shall be to:

(i) provide expert advice on the Design, construction, inspection and maintenance of elements of cable supported bridges including cables, anchorages, structural steelwork, aerodynamics, foundations and surfacing,

(ii) liaise with the Scheme Manager or Main Crossings Principal Structural Engineer on issues arising relating to cable supported bridges,

(iii) liaise with the Operating Company's staff to ensure issues arising from cable supported bridges are fully understood or implemented in accordance with the requirements of this Contract, and

(iv) certification of Design.

(b) Key tasks for a Principal Structural Health Monitoring Specialist shall be to:

(i) provide expert advice on the operation and maintenance of Structural Health Monitoring Systems including the operation, maintenance and replacement of components and the storage and retrieval of data,

(ii) liaise with the Scheme Manager or Principal Crossings Principal Structural Engineer on issues arising relating to the Structural Health Monitoring System, and

(iii) liaise with the Operating Company's staff to ensure issues arising from the Structural Health Monitoring System are fully understood or implemented in accordance with the requirements of this Contract.

(c) Key tasks for a Principal Mechanical and Electrical Systems Specialist shall be to:

(i) provide expert advice on the operation and maintenance of mechanical and electrical systems related to major cable supported structures including the operation and maintenance of de-humidification, SCADA, CCTV and security systems,

(ii) liaise with the Scheme Manager or Principal Crossings Principal Structural Engineer on issues arising relating to mechanical and electrical systems,

(iii) liaise with the Operating Company's staff to ensure issues arising from the mechanical and electrical systems are fully understood or implemented in accordance with the requirements of this Contract.

(iv) Certification of Design

(d) Key tasks for a Principal Traffic Measurement and Economics Specialist shall be to:

(i) undertake sufficient checks on the traffic measurement data,

(ii) liaise with the Scheme Manager on issues arising from traffic measurement and analysis,

(iii) liaise with the Operating Company's staff to ensure issues arising from traffic measurement and analysis are fully understood or

implemented in accordance with the requirements of this Contract, and

(iv) certification of Design.

(e) Key tasks for a Principal Geotechnical Specialist shall be to:

(i) undertake sufficient checks on the geotechnical surveys and analysis,

(ii) develop and manage geotechnical studies and ground investigations,

(iii) prepare geotechnical deliverables,

(iv) liaise with the Scheme Manager on issues arising from geotechnical measurement, analysis and reporting,

(v) liaise with the Operating Company's staff to ensure issues arising from:

(a) geotechnical surveys,

(b) measurement,

(c) analysis, and

(d) reporting,

are fully understood or implemented in accordance with the requirements of this Contract, and

(vi) certification of Design,

(f) Key tasks for a Principal Topographical Specialist shall be to:

(i) undertake sufficient checks on the topographical surveys and analysis,

(ii) develop and manage topographical studies and investigations,

(iii) prepare topographical deliverables,

(iv) liaise with the Scheme Manager on issues arising from topographical measurement, analysis and reporting,

(v) liaise with the Operating Company's staff to ensure issues arising from:

(a) topographical surveys,

(b) measurement,

(c) analysis, and

(d) reporting,

are fully understood or implemented in accordance with the requirements of this Contract.

(g) Key tasks for a Principal Environmental Specialist shall be to:

(i) provide expert advice, support and recommendations on any matters associated with the Design operation or maintenance of the Unit that have environmental impact implications from time to time as or when required by the Scheme Manager or the Overseeing Organisation or as required in the provision and performance of this contract,

(ii) develop and manage environmental studies,

(iii) undertake sufficient checks on the environmental studies,

(iv) prepare environmental study deliverables,

(v) liaise with the Scheme Manager on issues arising from:

(a) environmental studies,

(b) measurement,

(c) analysis, and

(d) reporting,

(vi) liaise with the Operating Company's staff to ensure issues arising from:

(a) environmental studies,

(b) measurement,

(c) analysis, and

(d) reporting,

are fully understood or implemented in accordance with the requirements of this Contract, and

(vii) certification of Design,

(h) Key tasks for a Principal Landscaping Specialist (Landscape Architect) shall be to:

(i) provide expert advice, support and recommendations on any matters associated with the Design operation or maintenance of landscaping on the Unit that have environmental impact implications from time to time as or when required by the Operating Company

Representative or the Overseeing Organisation or as required in the provision and performance of this contract,

(ii) develop and manage the:

(a) Landscape Action Plan,

(b) landscaping studies, and

(c) reporting,

(iii) undertake sufficient checks on the:

(a) Landscape Action Plan,

(b) landscaping studies, and

(c) reporting,

(iv) Prepare the:

(a) Landscape Action Plan,

(b) landscaping studies, and

(c) reporting deliverables,

(v) liaise with the Scheme Manager on issues arising from:

(a) landscaping studies,

(b) measurement,

(c) analysis, or

(d) reporting,

(vi) liaise with the Operating Company's staff to ensure issues arising from:

(a) landscaping studies,

(b) measurement,

(c) analysis, or

(d) reporting,

are fully understood or implemented in accordance with the requirements of this Contract, and

(vii) certification of Design.

12. Senior Specialist

12.1 Role

The role of a Senior Specialist shall be to provide expert advice support and recommendations on any matters associated with major cable supported bridges including cables, anchorages, structural steelwork, surfacing, foundations, aerodynamics, Structural Health Monitoring and mechanical and electrical systems together with traffic measurement, geotechnical surveys, topographical surveys, environmental obligations and Legislation or landscaping obligations and Legislation in terms of analysis and verification related to this Contract.

12.2 Qualifications

A Senior Specialist shall be a Chartered Engineer or hold a recognised professional qualification or corporate membership of a professional organisation appropriate to the specialist role. A Senior Specialist shall hold one or more qualifications from the following non-exhaustive list including Member of the Institution of Civil Engineers, Member of the Institution of Structural Engineers, Member of the Institution of Mechanical Engineers, Member of the Institution of Electrical Engineers, Member of the Institute of Environmental Management & Assessment, Member of the Institution of Water and Environmental Management, Chartered Environmentalist, Chartered Geologist, Chartered Member of the Landscape Institute or professional qualifications from other institutions of equal standing relevant to surveyors, architects, builders, foresters and ecologists as appropriate to the specialist role and acceptable to the Scottish Ministers. It is unlikely that anyone with less than 10 years' experience relevant to the position and performance of the role will meet the requirements for this post.

12.3 Key Tasks

(a) Key tasks for a Senior Cable Supported Bridge Specialist shall be to:

(i) provide expert advice on the Design, construction, inspection and maintenance of elements of cable supported bridges including cables, anchorages, structural steelwork, aerodynamics, foundations and surfacing,

(ii) liaise with the Scheme Manager or Principal Crossings Principal Structural Engineer on issues arising relating to cable supported bridges,

(iii) liaise with the Operating Company's staff to ensure issues arising from cable supported bridges are fully understood or implemented in accordance with the requirements of this Contract.

(b) Key tasks for a Senior Structural Health Monitoring Specialist shall be to:

(i) provide expert advice on the operation and maintenance of Structural Health Monitoring Systems including the operation, maintenance and replacement of components and the storage and retrieval of data,

(ii) liaise with the Scheme Manager or Principal Crossings Principal Structural Engineer on issues arising relating to the Structural Health Monitoring System,

(iii) liaise with the Operating Company's staff to ensure issues arising from the Structural Health Monitoring System are fully understood or implemented in accordance with the requirements of this Contract.

(c) Key tasks for a Senior Mechanical and Electrical Systems Specialist shall be to:

(i) provide expert advice on the operation and maintenance of mechanical and electrical systems related to major cable supported structures including the operation and maintenance of de-humidification, SCADA, CCTV and security systems,

(ii) liaise with the Scheme Manager or Principal Crossings Principal Structural Engineer on issues arising relating to mechanical and electrical systems,

(iii) liaise with the Operating Company's staff to ensure issues arising from the mechanical and electrical systems are fully understood or implemented in accordance with the requirements of this Contract.

(d) Key tasks for a Senior Traffic Measurement and Economics Specialist shall be to:

(i) undertake sufficient checks on the traffic measurement data,

(ii) liaise with the Scheme Manager on issues arising from traffic measurement and analysis, and

(iii) liaise with the Operating Company's staff to ensure issues arising from traffic measurement and analysis are fully understood or implemented in accordance with the requirements of this Contract.

(e) Key tasks for a Senior Geotechnical Specialist shall be to:

(i) undertake sufficient checks on the geotechnical surveys and analysis,

(ii) develop and manage geotechnical studies and ground investigations,

(iii) Liaise with the Scheme Manager on issues arising from:

(i) geotechnical measurement,

(ii) analysis, and

(iii) reporting,

(iv) liaise with the Operating Company's staff to ensure issues arising from:

(i) geotechnical measurement,

(ii) analysis, and

(iii) reporting,

are fully understood or implemented in accordance with the requirements of this Contract.

(f) Key tasks for a Senior Topographical Specialist shall be to:

(i) undertake sufficient checks on the topographical surveys analysis,

(ii) develop and manage topographical studies,

(iii) prepare topographical survey deliverables,

(iv) liaise with the Scheme Manager on issues arising from:

(i) topographical surveys,

(ii) measurement,

(iii) analysis, and

(iv) reporting,

(v) liaise with the Operating Company's staff to ensure issues arising from:

(i) topographical surveys,

(ii) measurement,

(iii) analysis, and

(iv) reporting,

are fully understood or implemented in accordance with the requirements of this Contract.

(g) Key tasks for a Senior Environmental Specialist shall be to:

(i) provide expert advice, support and recommendations on any matters associated with the Design operation or maintenance of the Unit that have environmental impact implications from time to time as or when required by the Scheme Manager or the Overseeing Organisation or as required in the provision and performance of this Contract,

(ii) develop and manage environmental studies,

(iii) undertake sufficient checks on the environmental studies,

(iv) prepare environmental study deliverables,

(v) liaise with the Scheme Manager on issues arising from:

(i) environmental studies,

(ii) measurement,

(iii) analysis, or

(iv) reporting,

(vi) liaise with the Operating Company's staff to ensure issues arising from:

(i) environmental studies,

(ii) measurement,

(iii) analysis, or

(iv) reporting,

are fully understood or implemented in accordance with the requirements of this Contract.

(h) Key tasks for a Senior Landscaping Specialist (Landscape Architect) shall be to:

(i) provide expert advice, support and recommendations on any matters associated with the Design operation or maintenance of landscaping on the Unit that have environmental impact implications from time to time as or when required by the Operating Company Representative or the Overseeing Organisation or as required in the provision and performance of this Contract,

(ii) develop and manage landscaping studies and reporting,

(iii) undertake sufficient checks on the landscaping studies and reporting,

(iv) prepare landscaping study or reporting deliverables,

(v) liaise with the Scheme Manager on issues arising from:

(i) landscaping studies,

(ii) measurement,

(iii) analysis, or

(iv) reporting,

(vi) liaise with the Operating Company's staff to ensure issues arising from:

(i) landscaping studies,

(ii) measurement,

(iii) analysis, or

(iv) reporting,

are fully understood or implemented in accordance with the requirements of this Contract.

13 Specialist

13.1 Role

The role of a Specialist shall be to provide expert advice support and recommendations on any matters associated with major cable supported bridges including cables, anchorages, structural steelwork, surfacing, foundations, aerodynamics, Structural Health Monitoring and mechanical and electrical systems together with traffic measurement, geotechnical surveys, topographical surveys, environmental obligations and Legislation or landscaping obligations and legislation in terms of analysis and verification related to this Contract.

13.2 Qualifications

A Specialist shall be a Chartered Engineer or hold a recognised professional qualification or corporate membership of a professional organisation appropriate to the specialist role. A Specialist shall hold one or more qualifications from the following non-exhaustive list including Member of the Institution of Civil Engineers, Member of the Institution of Structural Engineers, Member of the Institution of Mechanical Engineers, Member of the Institution of Electrical Engineers, Member of the Institute of Environmental Management & Assessment, Member of the Institution of Water and Environmental Management, Chartered Environmentalist, Chartered Geologist, Member of the Landscape Institute, Chartered Membership of the Landscape Institute or professional qualifications from other institutions of equal standing relevant to surveyors, architects, builders, foresters and ecologists as appropriate to the specialist role and acceptable to the Scottish Ministers. It is unlikely that anyone with less than five years' experience relevant to the position and performance of the role will meet the requirements for this post.

13.3 Key Tasks

(a) Key tasks for a Cable Supported Bridge Specialist shall be to:

(i) provide expert advice on the Design, construction, inspection and maintenance of elements of cable supported bridges including cables, anchorages, structural steelwork, aerodynamics, foundations and surfacing,

(ii) liaise with the Scheme Manager or Principal Crossings Principal Structural Engineer on issues arising relating to cable supported bridges,

(iii) liaise with the Operating Company's staff to ensure issues arising from cable supported bridges are fully understood or implemented in accordance with the requirements of this Contract.

(b) Key tasks for a Structural Health Monitoring Specialist shall be to:

(i) provide expert advice on the operation and maintenance of Structural Health Monitoring Systems including the operation, maintenance and replacement of components and the storage and retrieval of data,

(ii) liaise with the Scheme Manager or Principal Crossings Principal Structural Engineer on issues arising relating to the Structural Health Monitoring System,

(iii) liaise with the Operating Company's staff to ensure issues arising from the Structural Health Monitoring System are fully understood or implemented in accordance with the requirements of this Contract.

(c) Key tasks for a Mechanical and Electrical Systems Specialist shall be to:

(i) provide expert advice on the operation and maintenance of mechanical and electrical systems related to major cable supported structures including the operation and maintenance of de-humidification, SCADA, CCTV and security systems,

(ii) liaise with the Scheme Manager or Principal Crossings Principal Structural Engineer on issues arising relating to mechanical and electrical systems,

(iii) liaise with the Operating Company's staff to ensure issues arising from the mechanical and electrical systems are fully understood or implemented in accordance with the requirements of this Contract.

(d) Key tasks for a Traffic Measurement and Economics Specialist shall be to:

(i) undertake sufficient checks on the traffic measurement data,

(ii) liaise with the Scheme Manager on issues arising from traffic measurement and analysis, and

(iii) liaise with the Operating Company's staff to ensure issues arising from traffic measurement and analysis are fully understood or implemented in accordance with the requirements of this Contract.

(e) Key tasks for a Geotechnical Specialist shall be to:

(i) undertake sufficient checks on the geotechnical surveys and analysis,

(ii) develop and manage geotechnical studies and ground investigations,

(iii) prepare geotechnical deliverables,

(iv) liaise with the Scheme Manager on issues arising from:

(a) geotechnical measurement,

(b) analysis, and

(c) reporting,

(v) liaise with the Operating Company's staff to ensure issues arising from:

(a) geotechnical measurement,

(b) analysis, and

(c) reporting,

are fully understood or implemented in accordance with the requirements of this Contract.

(f) Key tasks for a Topographical Specialist shall be to:

(i) undertake sufficient checks on the topographical surveys analysis,

(ii) develop and manage topographical studies,

(iii) prepare topographical survey deliverables,

(v) liaise with the Scheme Manager on issues arising from:

(a) topographical surveys,

(b) measurement,

(c) analysis, and

(d) reporting,

(vi) liaise with the Operating Company's staff to ensure issues arising from:

(a) topographical surveys,

(b) measurement,

(c) analysis, and

(d) reporting,

are fully understood or implemented in accordance with the requirements of this Contract.

(g) Key tasks for an Environmental Specialist shall be to:

(i) provide expert advice, support and recommendations on any matters associated with the Design operation or maintenance of the Unit that have environmental impact implications from time to time as or when required by the Scheme Manager or the Overseeing Organisation or as required in the provision and performance of this Contract,

(ii) develop and manage environmental studies,

(iii) undertake sufficient checks on the environmental studies,

(iv) prepare environmental study deliverables,

(v) liaise with the Scheme Manager on issues arising from:

(a) environmental studies,

(b) measurement,

(c) analysis, or

(d) reporting,

(vi) liaise with the Operating Company's staff to ensure issues arising from:

(a) environmental studies,

(b) measurement,

(c) analysis, or

(d) reporting,

are fully understood or implemented in accordance with the requirements of this Contract.

(h) Key tasks for a Landscaping Specialist (Landscape Architect) shall be to:

(i) provide expert advice, support and recommendations on any matters associated with the Design operation or maintenance of landscaping on the Unit that have environmental impact implications from time to time as or when required by the Operating Company Representative or the Overseeing Organisation or as required in the provision and performance of this Contract,

(ii) develop and manage landscaping studies and reporting,

(iii) undertake sufficient checks on the landscaping studies and reporting,

(iv) Prepare landscaping study or reporting deliverables,

(v) liaise with the Scheme Manager on issues arising from:

(a) landscaping studies,

(b) measurement,

(c) analysis, or

(d) reporting,

(vi) liaise with the Operating Company's staff to ensure issues arising from:

(a) landscaping studies,

(b) measurement,

(c) analysis, or

(d) reporting,

are fully understood or implemented in accordance with the requirements of this Contract.

14 Junior Specialist

14.1 Role

The role of a Junior Specialist shall be to provide expert advice support and recommendations on any matters associated with traffic measurement, geotechnical surveys, topographical surveys, environmental obligations and Legislation or landscaping obligations and Legislation in terms of analysis and verification related to this Contract.

14.2 Qualifications

A Junior Specialist shall be a Graduate in the appropriate discipline or hold a recognised professional qualification or be a member of a professional organisation appropriate to the specialist role and acceptable to the Scottish Ministers. It is unlikely that anyone with less than one years' experience relevant to the position and performance of the role will meet the requirements for this post.

14.3 Key Tasks

(a) Key tasks for a Junior Traffic Measurement and Economics Specialist shall be to:

(i) undertake sufficient checks on the traffic measurement data,

(ii) liaise with the Scheme Manager on issues arising from traffic measurement and analysis, and

(iii) liaise with the Operating Company's staff to ensure issues arising from traffic measurement and analysis are fully understood or implemented in accordance with the requirements of this Contract.

(b) Key tasks for a Junior Geotechnical Specialist shall be to:

(i) undertake sufficient checks on the geotechnical surveys and analysis,

(ii) develop and manage geotechnical studies and ground investigations,

(iii) prepare geotechnical deliverables,

(iv) liaise with the Scheme Manager on issues arising from:

(a) geotechnical measurement,

(b) analysis, and

(c) reporting,

(v) liaise with the Operating Company's staff to ensure issues arising from:

(a) geotechnical measurement,

(b) analysis, and

(c) reporting,

are fully understood or implemented in accordance with the requirements of this Contract.

(c) Key tasks for a Junior Topographical Specialist shall be to:

(i) undertake sufficient checks on the topographical surveys analysis,

(ii) develop and manage topographical studies,

(iii) prepare topographical survey deliverables,

(v) liaise with the Scheme Manager on issues arising from:

(a) topographical surveys,

(b) measurement,

(c) analysis, and

(d) reporting,

(vi) liaise with the Operating Company's staff to ensure issues arising from:

(a) topographical surveys,

(b) measurement,

(c) analysis, and

(d) reporting,

are fully understood or implemented in accordance with the requirements of this Contract.

(d) Key tasks for a Junior Environmental Specialist shall be to:

(i) provide expert advice, support and recommendations on any matters associated with the Design operation or maintenance of the Unit that have environmental impact implications from time to time as or when required by the Scheme Manager or the Overseeing Organisation or as required in the provision and performance of this Contract,

(ii) develop and manage environmental studies,

(iii) undertake sufficient checks on the environmental studies,

(iv) prepare environmental study deliverables,

(v) liaise with the Scheme Manager on issues arising from:

(a) environmental studies,

(b) measurement,

(c) analysis, or

(d) reporting,

(vi) liaise with the Operating Company's staff to ensure issues arising from:

(a) environmental studies,

(b) measurement,

(c) analysis, or

(d) reporting,

are fully understood or implemented in accordance with the requirements of this Contract.

(e) Key tasks for a Junior Landscaping Specialist shall be to:

(i) provide expert advice, support and recommendations on any matters associated with the Design operation or maintenance of landscaping on the Unit that have environmental impact implications from time to time as or when required by the Operating Company Representative or the Overseeing Organisation or as required in the provision and performance of this Contract,

(ii) develop and manage landscaping studies and reporting,

(iii) undertake sufficient checks on the landscaping studies and reporting,

(iv) prepare landscaping study or reporting deliverables,

(v) liaise with the Scheme Manager on issues arising from:

(a) landscaping studies,

(b) measurement,

(c) analysis, or

(d) reporting,

(vi) liaise with the Operating Company's staff to ensure issues arising from:

(a) landscaping studies,

(b) measurement,

(c) analysis, or

(d) reporting,

are fully understood or implemented in accordance with the requirements of this Contract.

15 Lighting/Electrical Engineer

15.1 Role

The role of a Lighting/Electrical Engineer shall be to ensure that road lighting, including traffic signs, traffic signals, traffic management systems, temporary mobile equipment requiring electrical energy and any other electrical equipment and apparatus installed within the Unit (and to such extent electrical circuits that may extend beyond the Unit), are continuously managed and maintained to a high standard.

15.2 Qualifications

A Lighting/Electrical Engineer shall be a corporate member of the Institution of Lighting Engineers or Institution of Engineering and Technology. It is unlikely that anyone with less than seven years' experience in the design, maintenance and operation of lighting systems and other electrical equipment and apparatus relevant to the provision and performance of this Contract will meet the requirements for this post. In addition the Lighting/Electrical Engineer shall have a thorough understanding of health and safety requirements for the relevant subject areas, including Design, and possess at least a basic knowledge of quality assurance. A Lighting/Electrical Engineer shall have such skills to be able to manage the operation of IRIS and associated electrical energy inventory.

15.3 Key Tasks

Key tasks of a Lighting/Electrical Engineer shall be to:

(i) manage the installation, operation and maintenance of electrical apparatus and associated structural supports, network cabling and wiring for lighting, traffic signs, traffic signals, traffic management systems, traffic safety systems, weather stations, temporary mobile equipment requiring electrical energy and any other electrical equipment and apparatus installed within the Unit (and to such extent electrical circuits extend beyond the Unit),

(ii) ensure the competence of the personnel to whom the work is issued in accordance with the appropriate Code of Practice,

(iii) manage the maintenance of all electrical and all associated structural supports data on IRIS and manage the maintenance of the electrical energy inventory and delivery of required reporting and ensure all necessary Records are provided and maintained,

(iv) develop and manage such risk assessment regimes as detailed in document referenced within TD23/99 of the DMRB and appropriate Code of Practice,

(v) develop and maintain a good working relationship with lighting/electrical engineers of adjoining units, Traffic Scotland and local authorities and other third parties who may have shared lighting operational needs or who share use of electrical installations,

(vi) provide expert advice support and recommendations on any matters associated with the Design, installation, maintenance and repair of electrical systems in terms of:

(a) relevant health and safety requirements,

(b) diagnosis and correction of faults,

(c) technical and functional information,

(d) assurance that electrical systems are appropriate for the working conditions,

(e) installations and connections for/to electrical systems and components,

(f) inspecting and testing,

(g) execution of emergency work, and

(h) energy saving management.

SCOTTISH MINISTERS' REQUIREMENTS

SCHEDULE 9 PART 3

SPECIFICATION FOR OPERATIONS (3)

CONTENTS **Page No.**

Standard Drawings supplied to each Tenderer **1**

SCOTTISH MINISTERS' REQUIREMENTS

SCHEDULE 9 PART 3

SPECIFICATION FOR OPERATIONS (3)

Standard Drawings supplied to each Tenderer

LIST OF DRAWINGS IN THIS ANNEX	
Drawing No.	**Title**
400/15/001	Pedestrian Guard Rail Type G1
500/01/337-379	Drainage and Service Ducts – Duct Groups D1 - D4
500/05/160-166	Drainage and Service Ducts – Drawpits DP1- DP2
500/05/169-178	Drainage and Service Ducts – Gully Types G1- G4
500/06/001	Headwall Type 1 – Brickwork
500/06/010	Headwall Type 1 – Mass Concrete
500/06/019	Headwall Type 3 – Reinforced Concrete
500/16/001-012	Protection of Public Utility Apparatus and Drainage – Protection Type P1 – P4
1100/01/001-019	Kerb Types K1 to K4
1100/01/025-037	Kerb Types K5 to K7
1100/01/040	Kerb Types K8 and K9
1100/01/043	Kerb Types K10 and K11
1100/01/046	Kerb Types K12 and K13
1100/01/052	Kerb Types K16 and K17
1100/01/061-082	Kerb Types K20 to K24
1100/01/085-115	Channel Types C1-C6
1100/01/118	Edging Type E1
1100/01/136-139	Kerb Type Quadrants Q1 and Q2
1100/02/124-127	Combined Kerb and Drainage System Types DK1 and DK2
1100/02/130	Combined Kerb and Drainage System Types DK3
1100/02/133	Combined Kerb and Drainage System Outfall Types DK4
1100/05/001-010	Footways, Footpaths, Paved Areas and Cycleways Types F1 to F4
1100/05/013-016	Footways, Footpaths, Paved Areas and Cycleways Types F5 and F6
1100/05/019-028	Footways, Footpaths, Paved Areas and Cycleways Types F7 to F10

LIST OF DRAWINGS IN THIS ANNEX	
Drawing No.	**Title**
1100/05/031-040	Footways, Footpaths, Paved Areas and Cycleways Types F11 to F14
1100/05/043-052	Footways, Footpaths, Paved Areas and Cycleways Types F15 to F18
1100/05/055-064	Footways, Footpaths, Paved Areas and Cycleways Types F19 to F22
1100/05/067-073	Footways, Footpaths, Paved Areas and Cycleways Types F23 to F25
1100/05/085 & 088	Recessed Gullies GS1 and GS2 with Kerb Surround
1200/07/001	Precast Concrete Bollard Type B1
1200/08/001	Verge hazard marker posts Type VM1
1200/08/002	Verge hazard marker posts Type VM2A and VM2B
1200/09/001	Edge of Carriageway Hazard Markers Type ECB1
1200/10/1	Details for Sign Post Foundation Sheet 1 of 2
1200/10/2	Details for Sign Post Foundation Sheet 2 of 2
MCX 0138 (Modified)	Typical Access Steps

Drawing: 400/15/001 – Pedestrian Guard Rail Type G1

TERM CONTRACT FOR MANAGEMENT AND MAINTENANCE OF THE SCOTTISH TRUNK ROAD NETWORK

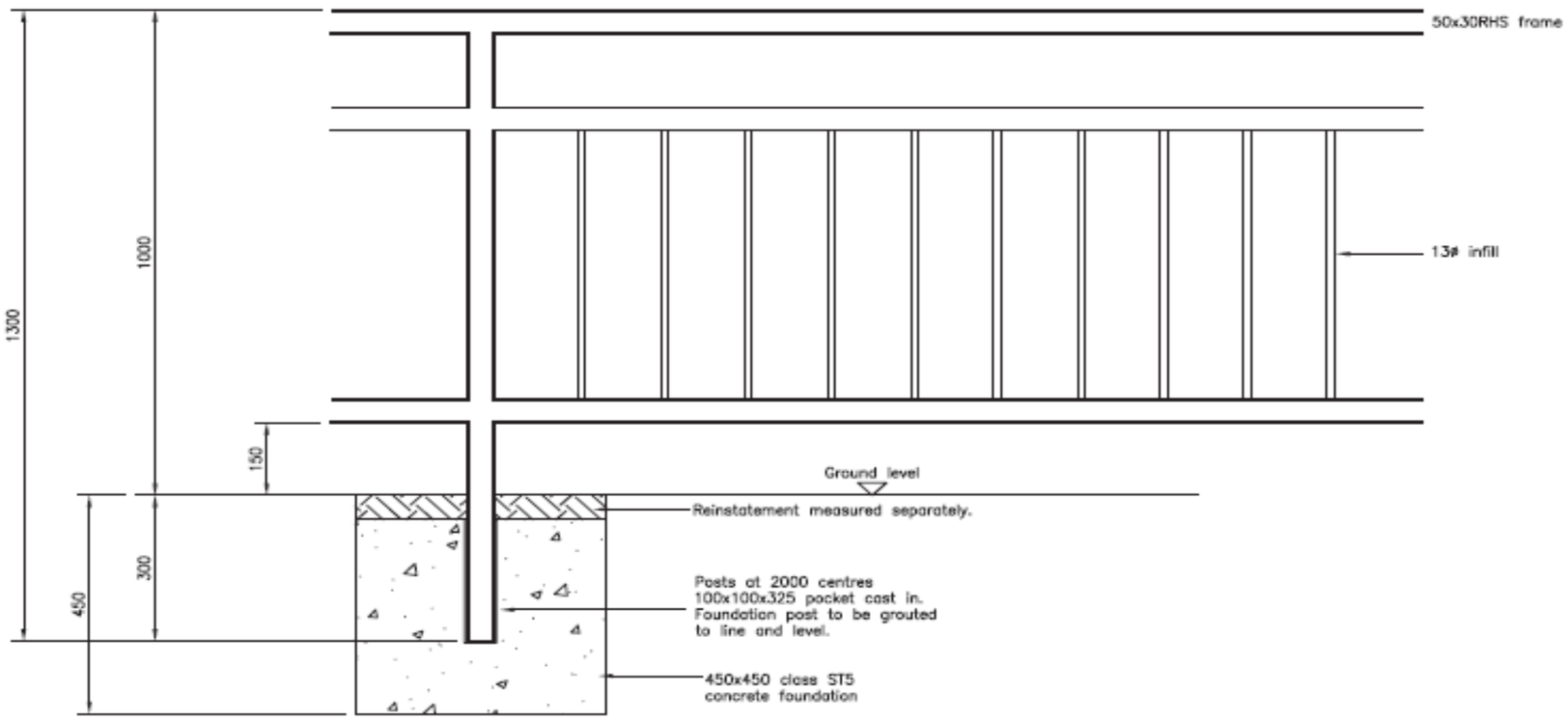

M35S – 2 metre panel with
sight gap and staggered infill

Notes:

1. Fencing to specification series 400.
2. Height of fence above ground is nominal and shall be varied to achieve a satisfactory vertical alignment.
3. Guardrail to comply with BS 7818 for Guardrail Classes 1 to 4 as manufactured by Fabrikat (Nottingham) Ltd, Hamilton Road, Sutton–in–Ashfield, Notts NG75LN (or equivalent).
4. Ground shall be trimmed as necessary to suit bottom of fence.
5. All ferrous metals to be galvanised to clause 1909 of the specification.
6. All dimensions in mm.

Title	PEDESTRIAN GUARDRAIL TYPE G1 'FABRIKAT' M35S
Scale	Not to scale
Drn	Date April 2005
Drawing Number 400/15/001	Revision

Drawing: 500/01/337-379 – Drainage and Service Ducts – Duct Groups D1 – D4

TERM CONTRACT FOR MANAGEMENT AND MAINTENANCE OF THE SCOTTISH TRUNK ROAD NETWORK

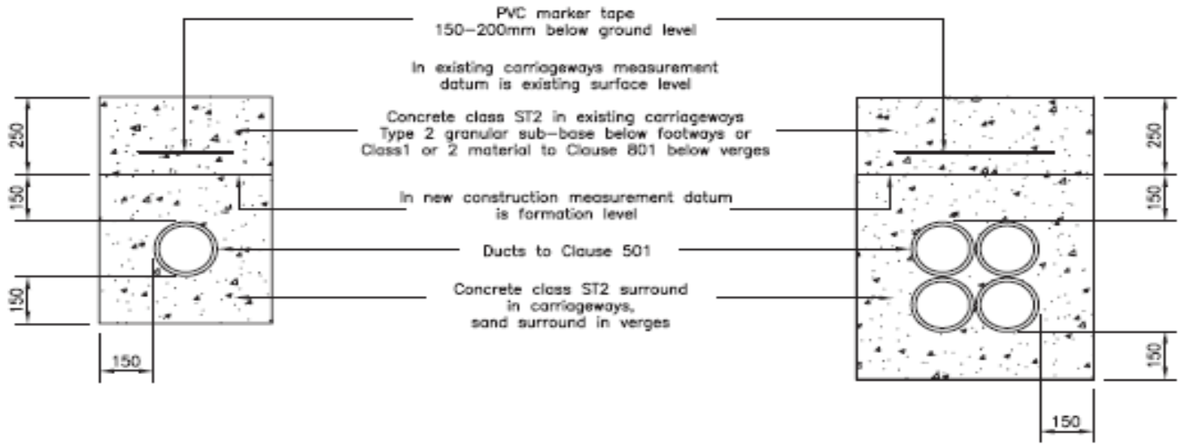

GROUP D1

GROUP D4

DUCT GROUP

D1 1 No. DUCT
D2 2 No. – NOT SHOWN
D3 3 No. – NOT SHOWN
D4 4 No. DUCTS

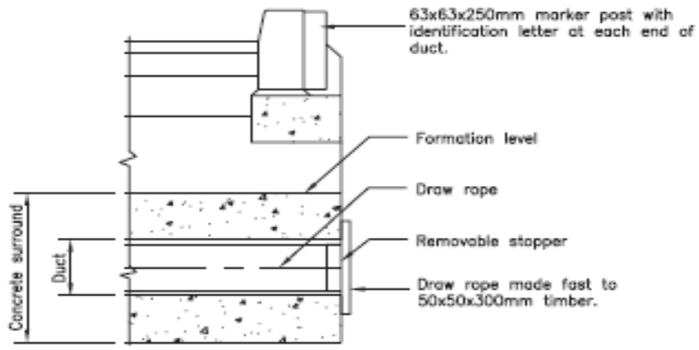

TYPICAL SECTION AT KERB

Notes:

1. Ducts to comply with specification series 500.
2. Diameter of ducts to be specified in the contract.
3. Coloured ducts to be used where required.
4. No bends in 50mm dia ducts. Maximum bend in 100mm dia duct to be 45°.
5. For street lighting ducts shall be orange polyethylene with the words "STREET LIGHTING" printed uppermost.

Title	DRAINAGE AND SERVICE DUCTS DUCT GROUP D1 – D4
Scale	Not to scale
Drn	Date April 2005
Drawing Number 500/01/337-379	Revision

Drawing: 500/05/160-166 – Drainage and Service Ducts – Drawpits DP1 – DP2

TERM CONTRACT FOR MANAGEMENT AND MAINTENANCE OF THE SCOTTISH TRUNK ROAD NETWORK

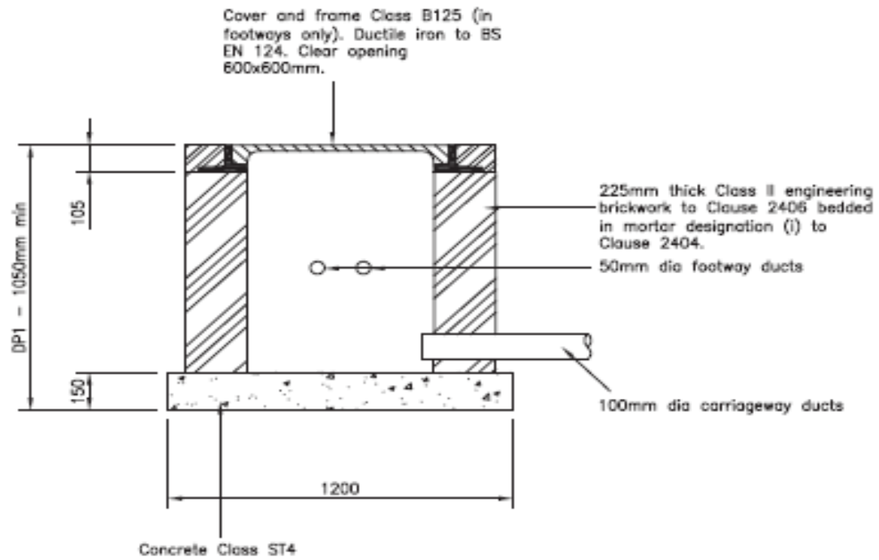

DRAWPIT TYPE

DP1 DRAWPIT WITH CARRIAGEWAY DUCTS
DP2 DRAWPIT WITH FOOTWAY DUCTS ONLY

TRANSPORT SCOTLAND

Notes:

1. Top of drawpit base to be 50mm below invert of lowest duct.

Title	DRAINAGE AND SERVICE DUCTS DRAWPITS DP1 AND DP2
Scale	Not to scale
Drn	Date April 2005
Drawing Number	500/05/160-166
Revision	

Drawing: 500/05/169-178 – Drainage and Service Ducts – Gully Types G1 – G4

TERM CONTRACT FOR MANAGEMENT AND MAINTENANCE OF THE SCOTTISH TRUNK ROAD NETWORK

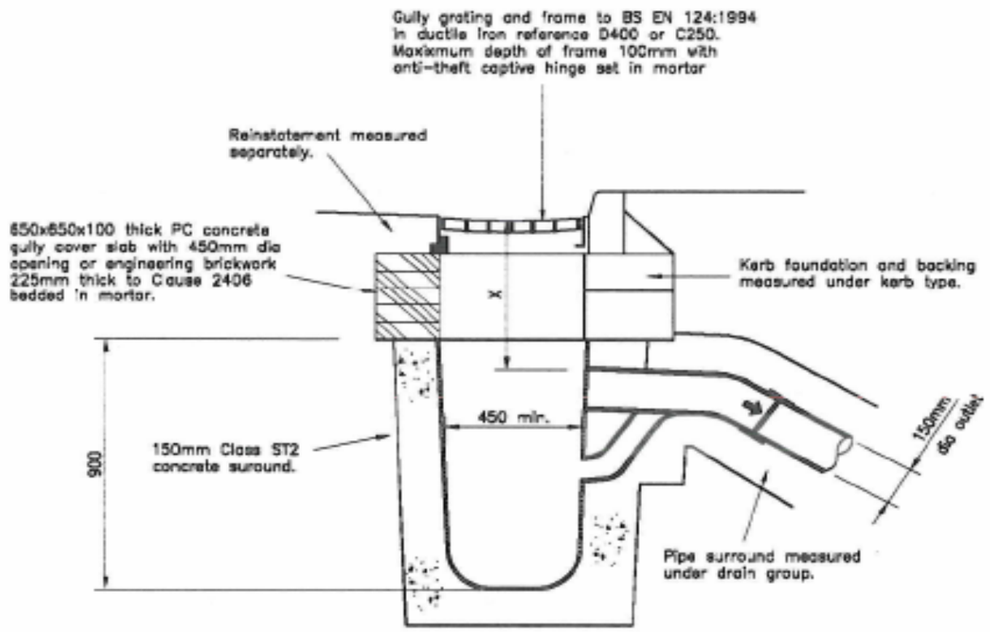

TRAPPED GULLY TYPE G1

X = 800mm from top of grating to top of carriageway gully outlet when connecting pipe outside.

TRAPPED GULLY TYPE G2

X = 750mm when connecting pipe under carriageway.

TRAPPED GULLY TYPE G4

Used as a replacement for proprietary cast iron street gully

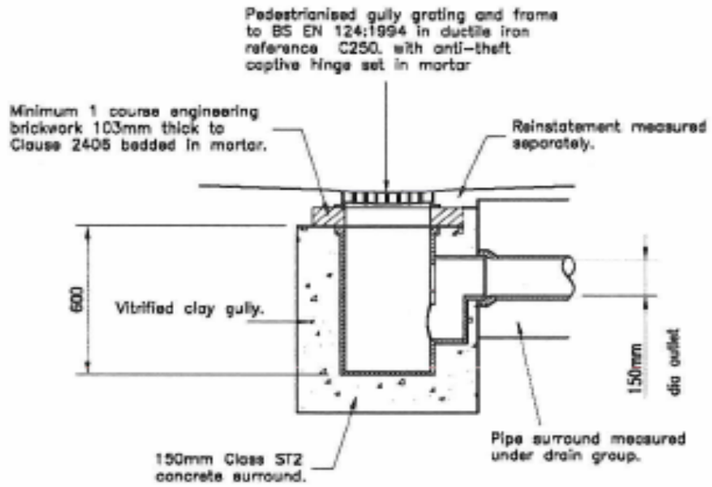

TRAPPED GULLY TYPE G3

Notes:

1. All dimensions in mm.
2. Drainage to be specification Series 500.
3. Gullies to be:-
   (a) Precast concrete to BS EN 230.
   (b) Vitrified clay to BS EN 295.
   (c) Polypropolene, polyethylene, PVCu or other approved plastic materials and of a type approved by the Engineer with a 150mm minimum Class ST2 concrete surround.
4. Mortar to be Clause 2404 designation (i).

Title	DRAINAGE AND SERVICE DUCTS GULLY TYPES G1 - G4
Scale	Not to scale
Drn	Date April 2005
Drawing Number 500/05/169 - 178	Revision

Drawing: 500/06/001 – Headwall Type 1 – Brickwork

TERM CONTRACT FOR MANAGEMENT AND MAINTENANCE OF THE SCOTTISH TRUNK ROAD NETWORK

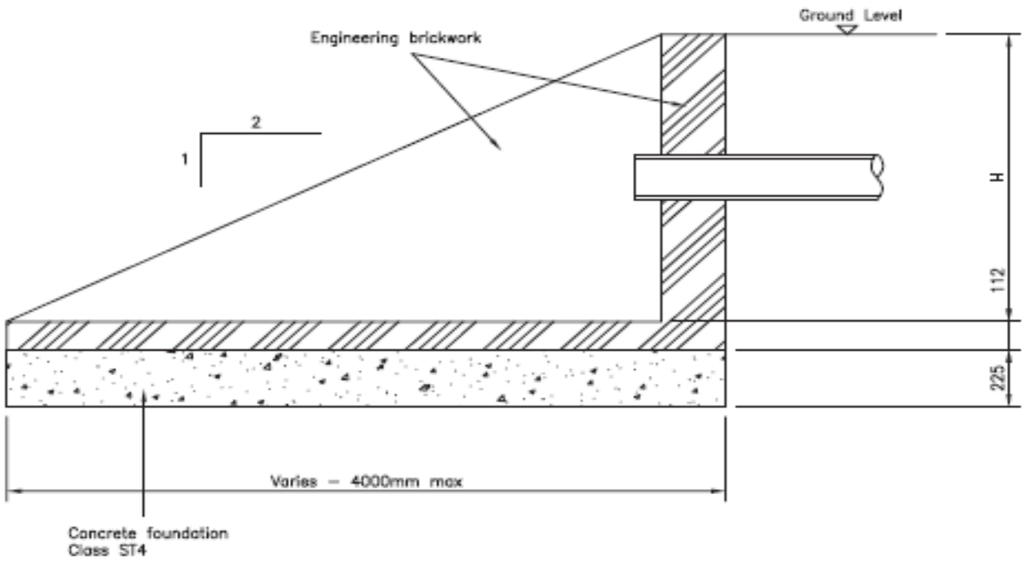

SECTION VIEW

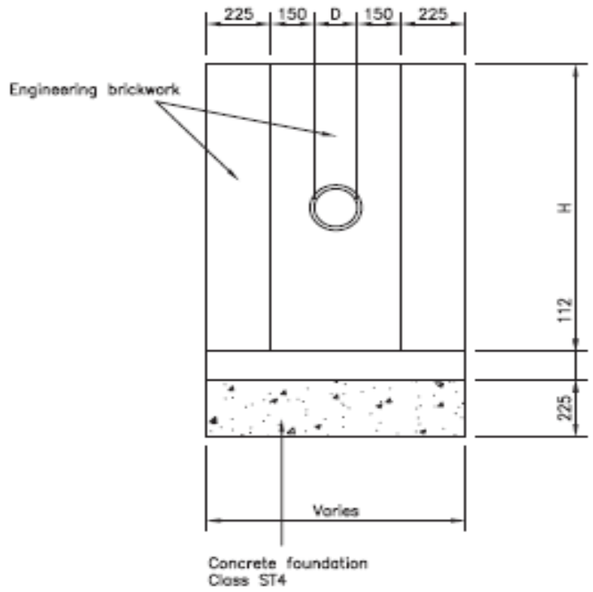

END VIEW

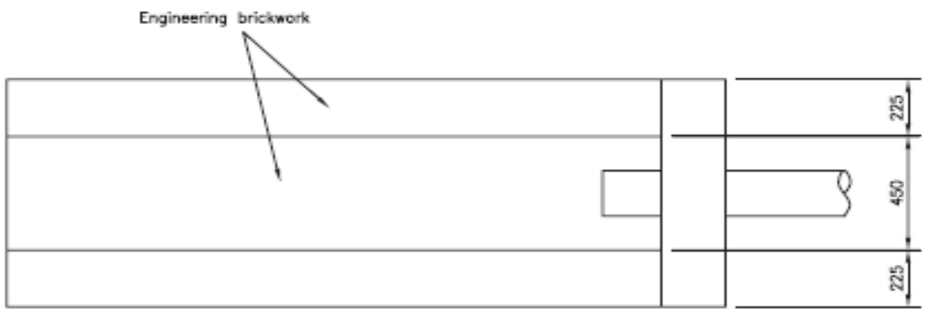

PLAN VIEW

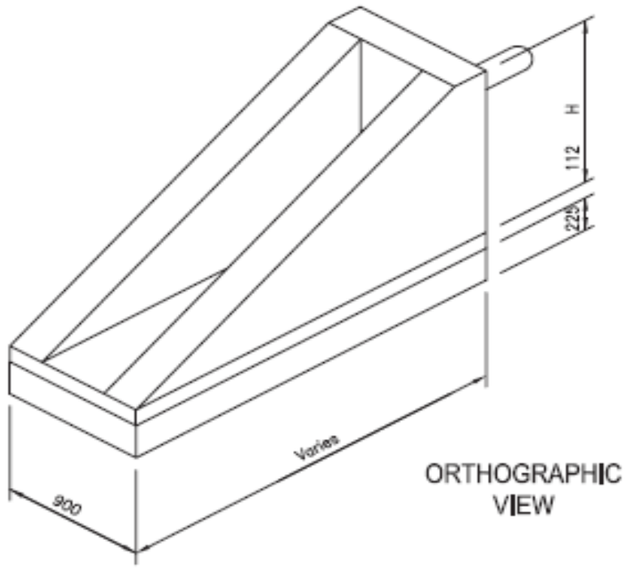

ORTHOGRAPHIC VIEW

TRANSPORT SCOTLAND

Notes:

1. All dimensions in mm.
2. 2:1 batter on side walls.
3. Dimension H not to exceed 2000mm.
4. Pipe diameter D not to exceed 225mm.
5. Engineering brickwork to comply with Clause 2406 with mortar designation (i) to Clause 2404.

Title	HEADWALL TYPE 1 BRICKWORK
Scale	Not to scale
Drn	Date April 2005
Drawing Number 500/06/001	Revision

Drawing: 500/06/010 – Headwall Type 1 – Mass Concrete

TERM CONTRACT FOR MANAGEMENT AND MAINTENANCE OF THE SCOTTISH TRUNK ROAD NETWORK

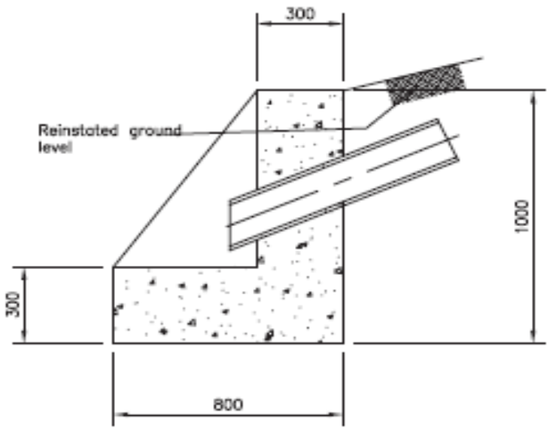

SECTION VIEW

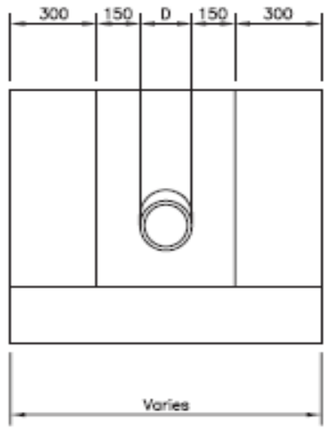

END VIEW

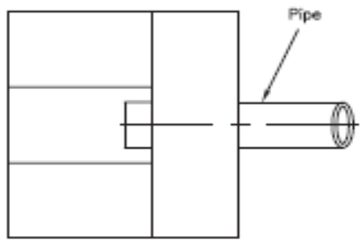

PLAN VIEW

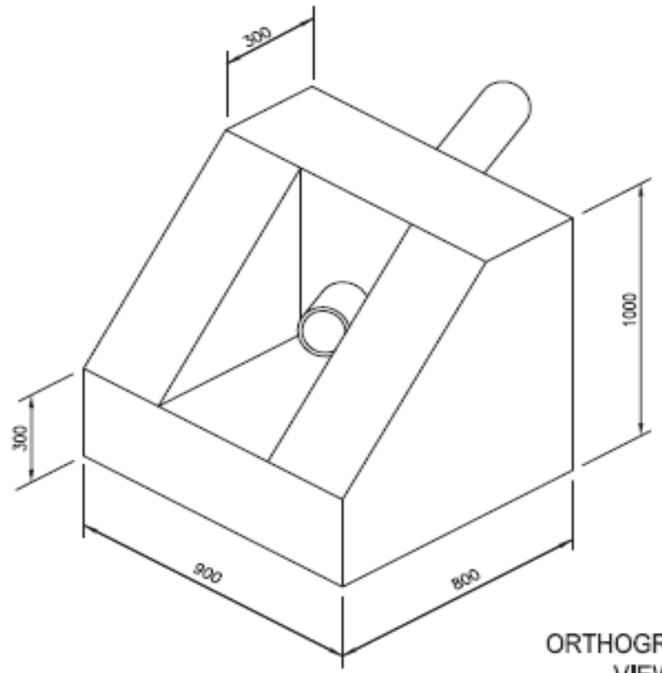

ORTHOGRAPHIC VIEW

TRANSPORT SCOTLAND

Notes:

1. All dimensions in mm
2. Backfilling to be general fill and topsoil unless noted otherwise.
3. Pipe diameter D, fall and levels to be specified in contract
4. Concrete to be grade ST4 to Clause 2602.

Title	HEADWALL TYPE 2 MASS CONCRETE
Scale	Not to scale
Drn	Date April 2005
Drawing Number 500/06/010	Revision

Drawing: 500/06/019 – Headwall Type 3 – Reinforced Concrete

TERM CONTRACT FOR MANAGEMENT AND MAINTENANCE OF THE SCOTTISH TRUNK ROAD NETWORK

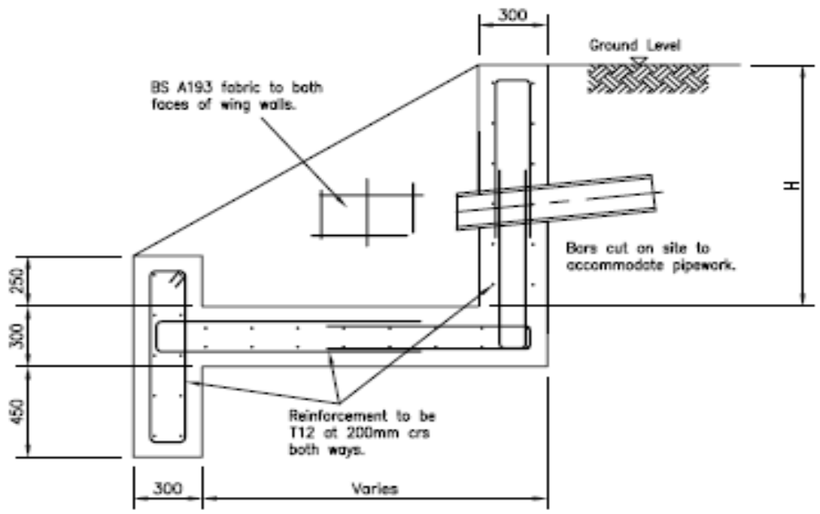

SECTION VIEW

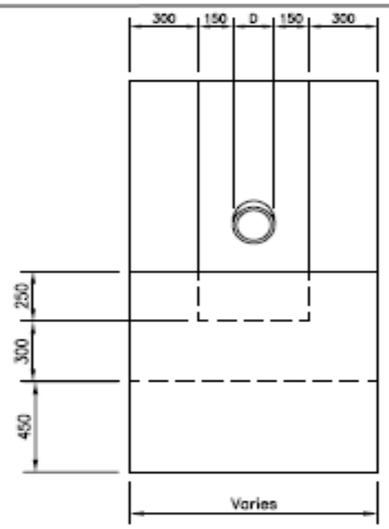

END VIEW

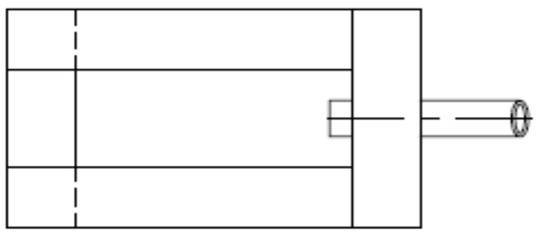

PLAN VIEW

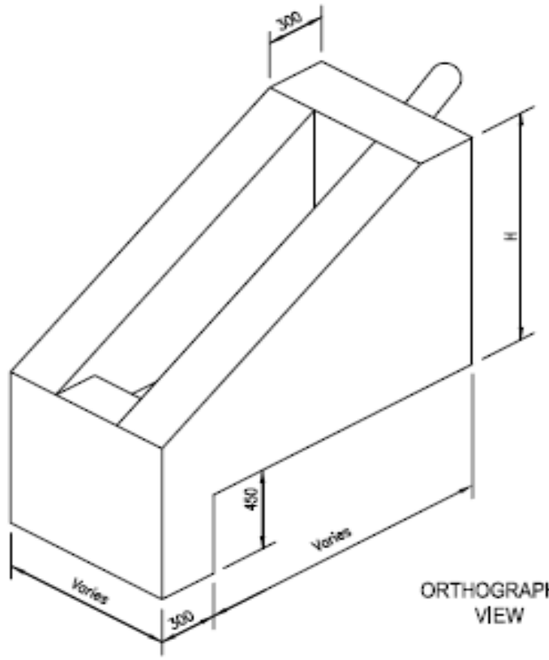

ORTHOGRAPHIC VIEW

Notes:

1. All dimensions in mm
2. Backfilling to be general fill and topsoil unless noted otherwise.
3. Pipe diameter D, fall and levels to be specified in contract
4. Concrete to be strength Class C28/35 in accordance with BS 8500.
5. Dimension H not to exceed 1.5 metres.
6. Minimum depth of cover to all reinforcement to be 75mm.

Title	HEADWALL TYPE 3 REINFORCED CONCRETE
Scale	Not to scale
Drn	Date April 2005
Drawing Number 500/06/019	Revision

Drawing: 500/16/001-012 – Protection of Public Utility Apparatus and Drainage – Protection Type P1 – P4

TERM CONTRACT FOR MANAGEMENT AND MAINTENANCE OF THE SCOTTISH TRUNK ROAD NETWORK
SOUTH WEST UNIT

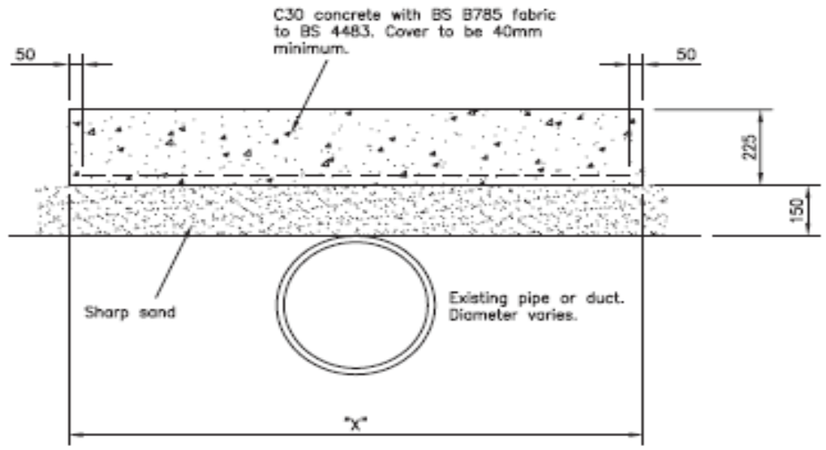

PROTECTION TYPE P1 "X"=500mm
PROTECTION TYPE P2 "X"=1000mm
PROTECTION TYPE P3 "X"=1500mm
PROTECTION TYPE P4 "X"=2000mm

Notes:

Title
PROTECTION OF PUBLIC UTILITY APPARATUS AND DRAINAGE PROTECTION TYPE P1-P4

Scale: Not to scale

Drn

Date: April 2005

Drawing Number: 500/16/001-012

Revision

Drawing: 1100/01/001-019 – Kerb Types K1 to K4

TERM CONTRACT FOR MANAGEMENT AND MAINTENANCE OF THE SCOTTISH TRUNK ROAD NETWORK

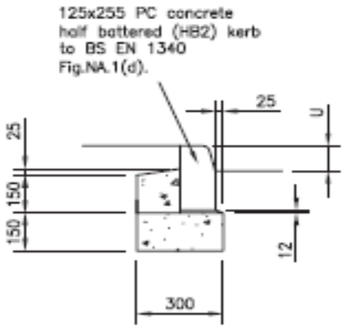

KERB TYPE K1

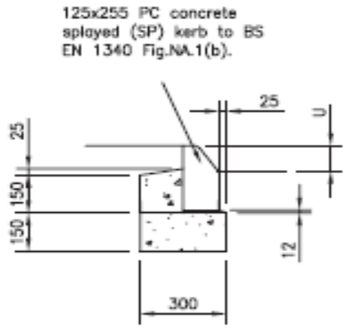

KERB TYPE K2

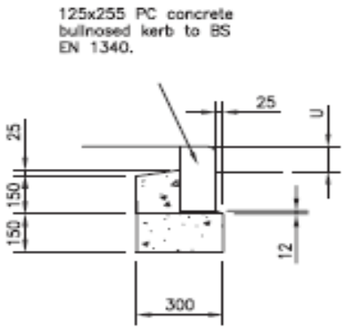

KERB TYPE K3

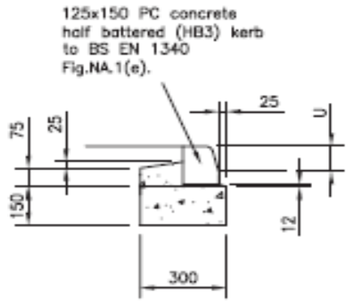

KERB TYPE K4

Notes:

1. All dimensions in mm.
2. Kerbs to be to specification cl. 1101.
3. Upstand U to be 100mm unless stated otherwise in the contract.
4. Mortar bedding to be to Clause 2601.
5. Kerb type K3 is a non-standard dimension.
6. Kerb foundation and backing to be mix ST1 to Clause 2602.

Title	KERB TYPES K1 TO K4
Scale	Not to scale
Drn	Date April 2005
Drawing Number 1100/01/001-019	Revision

Drawing: 1100/01/025-037 – Kerb Types K5 to K7

TERM CONTRACT FOR MANAGEMENT AND MAINTENANCE OF THE SCOTTISH TRUNK ROAD NETWORK

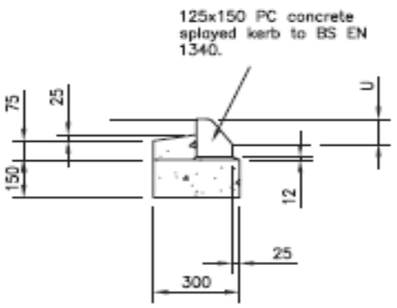

KERB TYPE K5

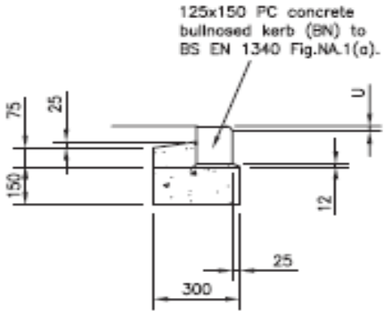

KERB TYPE K6

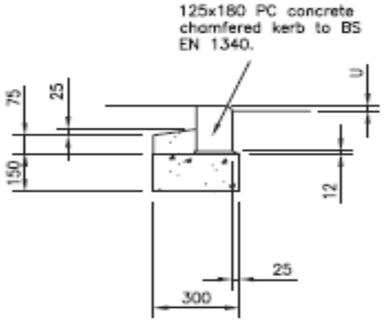

KERB TYPE K7

Notes:

1. All dimensions in mm.
2. Kerbs to be to specification Clause 1101
3. For kerb type K5 upstand U to be 100mm unless stated otherwise in the contract
4. Kerb foundation and backing to be mix ST1 to Clause 2602.
5. Mortar bedding to be to Clause 2601
6. For kerb types K6 and K7 the upstand U shall be:
   (i) for pedestrian crossings – 0.
   (ii) for vehicular access – 20.
7. Kerb types K5 and K7 are non–standard dimensions.

Title	KERBS TYPES K5 TO K7
Scale	Not to scale
Drn	Date APRIL 2005
Drawing Number 1100/01/025-037	Revision

Drawing: 1100/01/040 – Kerb Types K8 and K9

TERM CONTRACT FOR MANAGEMENT AND MAINTENANCE OF THE SCOTTISH TRUNK ROAD NETWORK

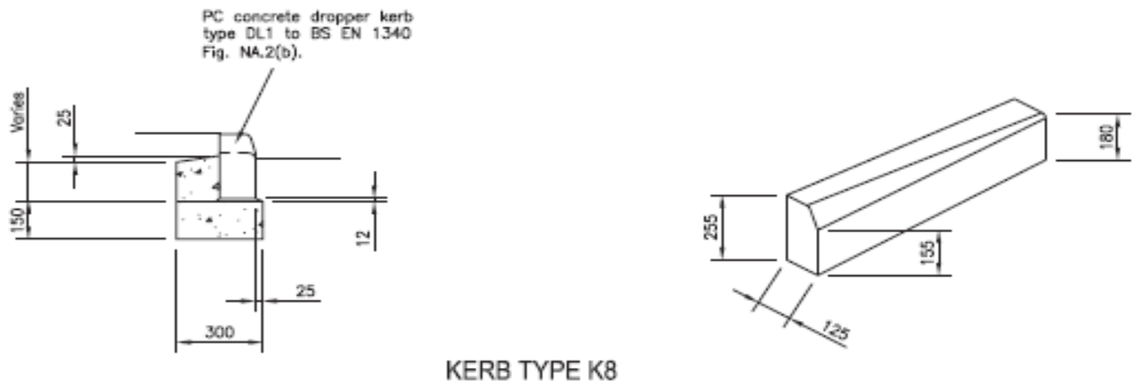

KERB TYPE K8

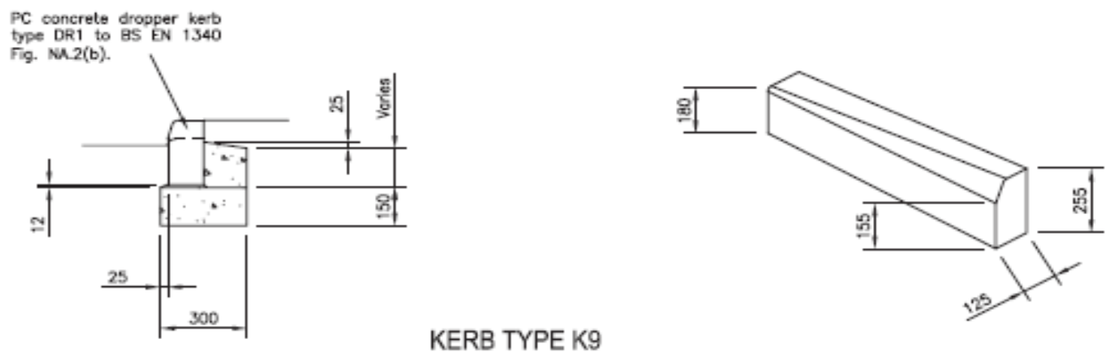

KERB TYPE K9

Notes:

1. All dimensions in mm.
2. Kerbs to be to specification Clause 1101
3. Kerb upstand to be 100mm unless stated otherwise in the contract
4. Kerb foundation and backing to be mix ST1 to Clause 2602
5. Mortar bedding to be to Clause 2601

Title	KERBS TYPES K8 AND K9
Scale	Not to scale
Drn	Date April 2005
Drawing Number 1100/01/040	Revision

Drawing: 1100/01/043 – Kerb Types K10 and K11

TERM CONTRACT FOR MANAGEMENT AND MAINTENANCE OF THE SCOTTISH TRUNK ROAD NETWORK

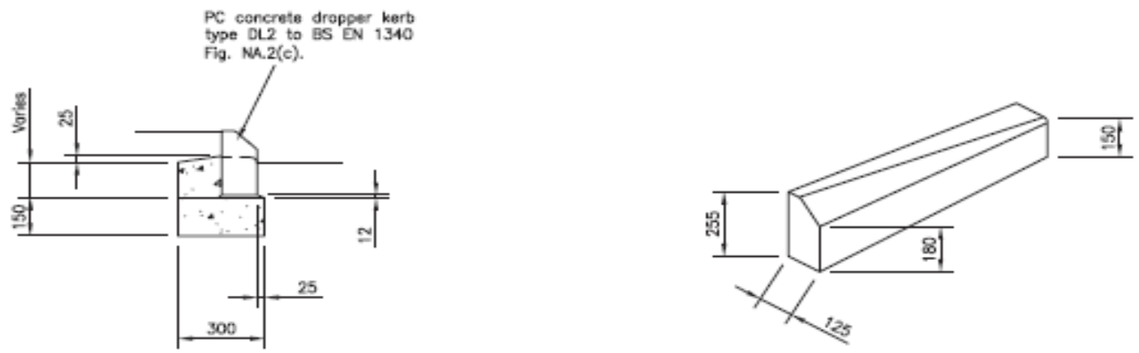

KERB TYPE K10

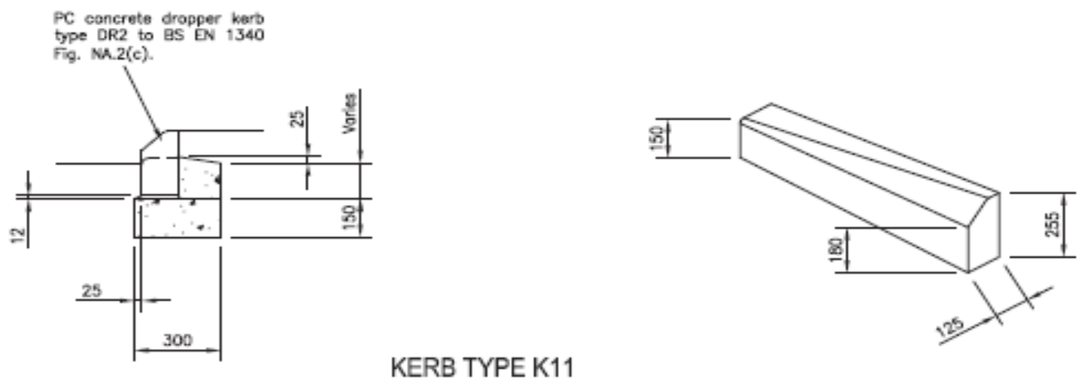

KERB TYPE K11

Notes:

1. All dimensions in mm.
2. Kerbs to be to specification Clause 1101
3. Kerb upstand to be 100mm unless stated otherwise in the contract
4. Kerb foundation and backing to be mix ST1 to Clause 2602
5. Mortar bedding to be to Clause 2601

Title
KERBS TYPES
K10 AND K11

Scale: Not to scale

Drn

Date: April 2005

Drawing Number: 1100/01/043

Revision

Drawing: 1100/01/046 – Kerb Types K12 and K13

TERM CONTRACT FOR MANAGEMENT AND MAINTENANCE OF THE SCOTTISH TRUNK ROAD NETWORK

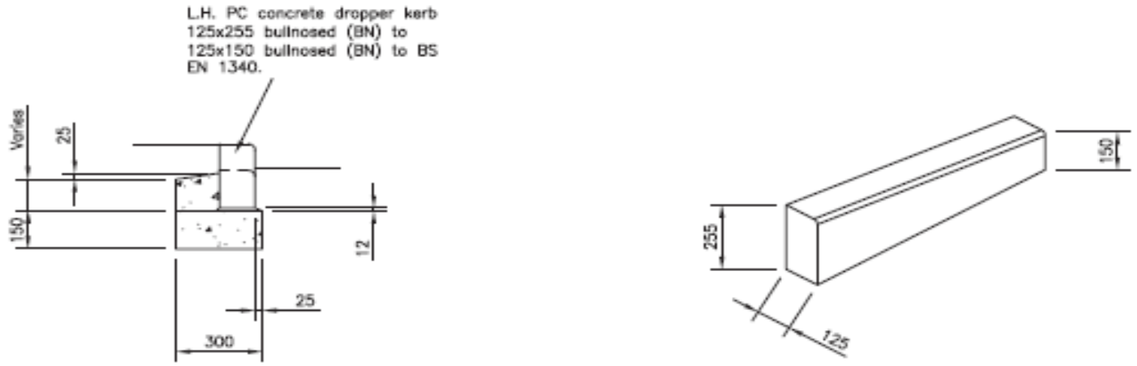

KERB TYPE K12

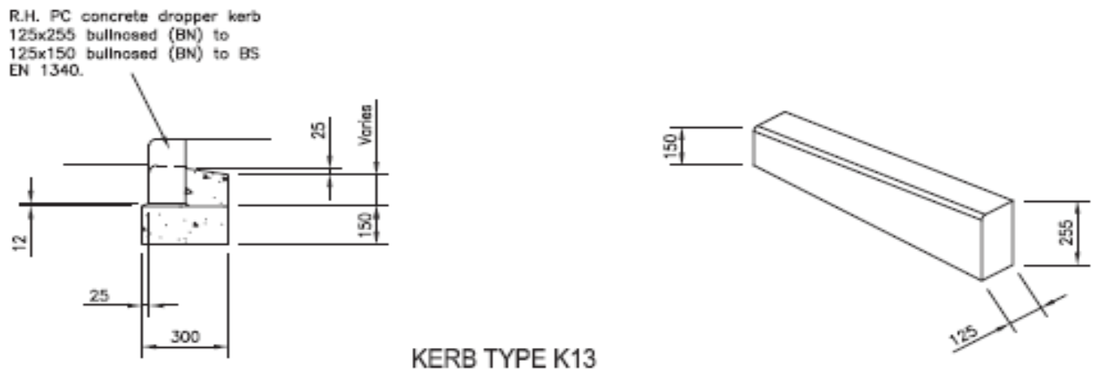

KERB TYPE K13

Notes:

1. All dimensions in mm.
2. Kerbs to be to specification Clause 1101.
3. Kerb upstand to be 100mm unless stated otherwise in the contract.
4. Kerb foundation and backing to be mix ST1 to Clause 2602.
5. Mortar bedding to be to Clause 2601.
6. Kerb types K12 and K13 are non-standard dimensions.

Title	KERBS TYPES K12 AND K13
Scale	Not to scale
Drn	Date April 2005
Drawing Number 1100/01/046	Revision

Drawing: 1100/01/052 Kerb Types K16 and K17

TERM CONTRACT FOR MANAGEMENT AND MAINTENANCE OF THE SCOTTISH TRUNK ROAD NETWORK

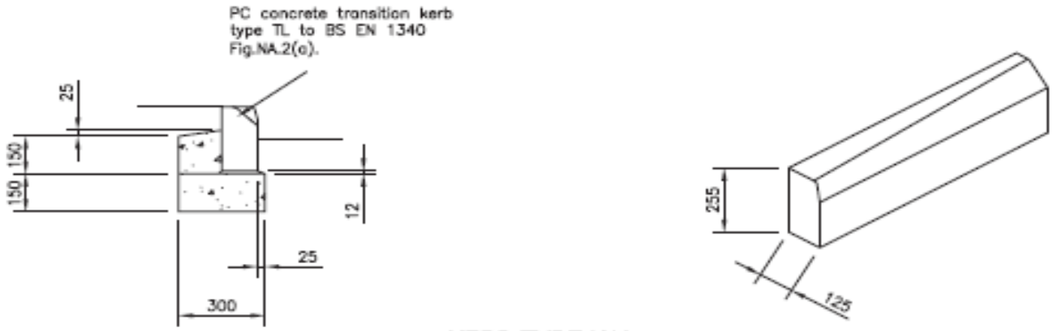

KERB TYPE K16

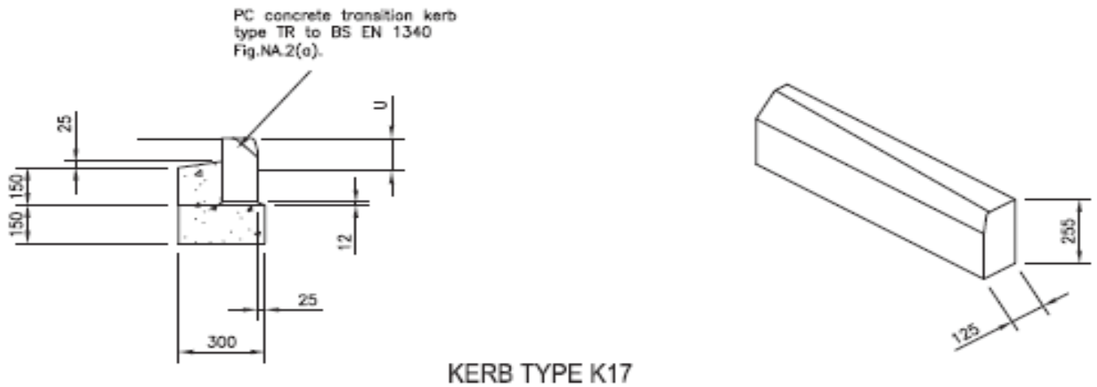

KERB TYPE K17

Notes:

1. All dimensions in mm.
2. Kerbs to be to specification Clause 1101
3. Kerb upstand U to be 100mm unless stated otherwise in the contract
4. Kerb foundation and backing to be mix ST1 to Clause 2602
5. Mortar bedding to be to Clause 2601

Title	KERBS TYPES K16 AND K17
Scale	Not to scale
Drn	Date April 2005
Drawing Number 1100/01/052	Revision

Drawing: 1100/01/061-082 – Kerb Types K20 to K24

TERM CONTRACT FOR MANAGEMENT AND MAINTENANCE OF THE SCOTTISH TRUNK ROAD NETWORK

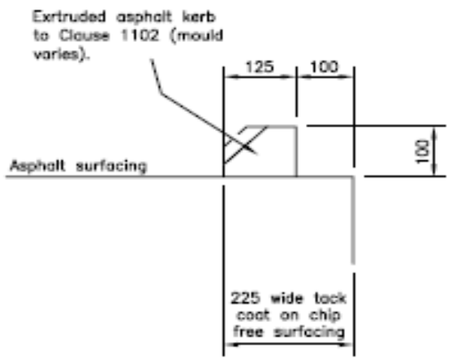

KERB TYPE K20

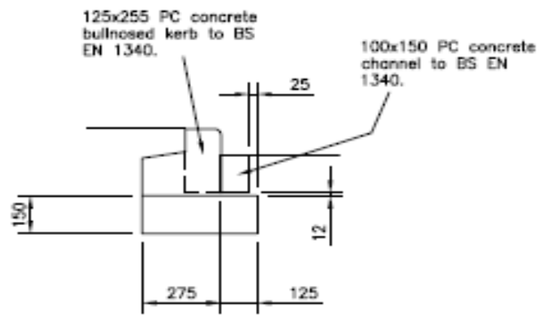

KERB TYPE K21

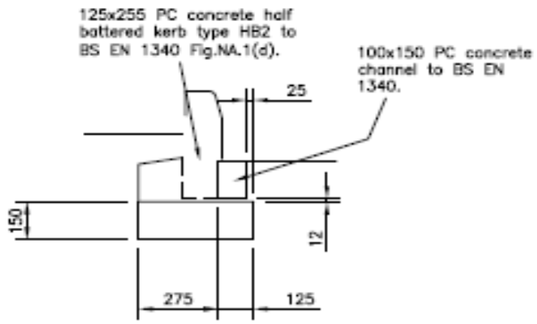

KERB TYPE K22

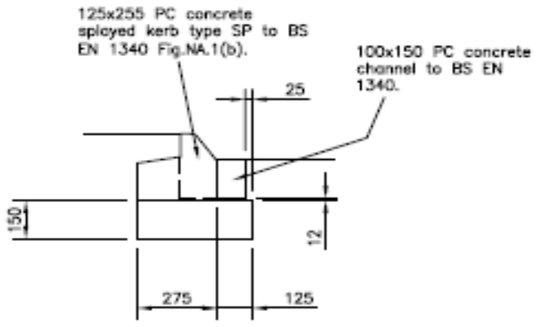

KERB TYPE K23

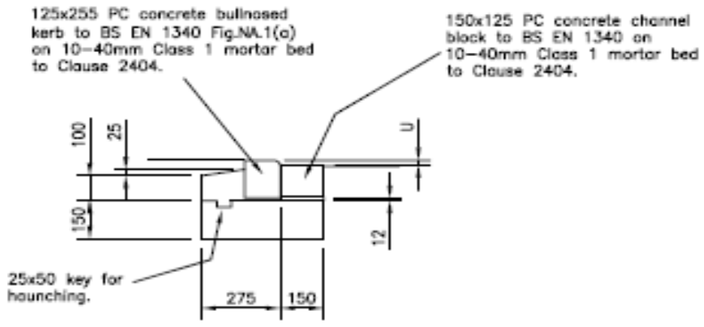

KERB TYPE K24

Notes:

1. All dimensions in mm.
2. Kerbs to be to specification Clause 1101.
3. For kerb types K20–K23 upstand to be 100mm unless stated otherwise in the contract.
4. Kerb foundation and backing to be mix ST1 to Clause 2602.
5. Mortar bedding to be to Clause 2601.
6. For kerb type K24 upstand U shall be:
   (i) for pedestrian crossings – 0
   (ii) for vehicular access – 20.

Title	KERB TYPES K20 TO K24
Scale	Not to scale
Drn	Date April 2005
Drawing Number 1100/01/061-082	Revision

Drawing: 1100/01/085-115 – Channel Types C1 – C6

TERM CONTRACT FOR MANAGEMENT AND MAINTENANCE OF THE SCOTTISH TRUNK ROAD NETWORK

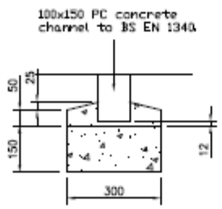

CHANNEL TYPE C1

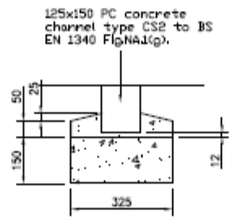

CHANNEL TYPE C2

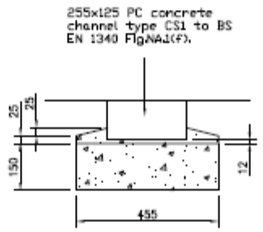

CHANNEL TYPE C3

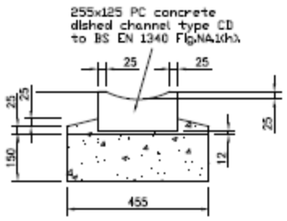

CHANNEL TYPE C4

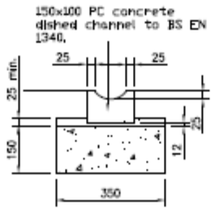

CHANNEL TYPE C5

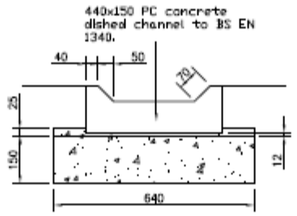

PC- DISHED
CHANNEL 440X150

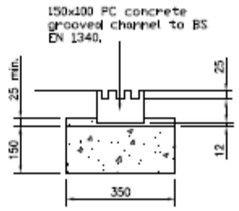

CHANNEL TYPE C6

TRANSPORT SCOTLAND
An agency of The Scottish Government

Notes:

1. All dimensions in mm.

2. Channels to be to specification CL 1101.

3. Channel foundations and banking to be mix ST1 to Clause 2602.

4. Mortar bedding to be to Clause 2601.

5. Sealant to be to Clause 1017.

6. Channel types C1, C5, C6 and PS–DISHED CHANNEL are non–standard dimensions.

Title
CHANNEL TYPES
C1 TO C6
AND PC–DISHED CHANNEL

Scale: Not to scale

Drawn:

Date: April 2005

Drawing Number: 1100/01/085–115

Revision: A

Drawing: 1100/01/118 – Edging Type E1

TERM CONTRACT FOR MANAGEMENT AND MAINTENANCE OF THE SCOTTISH TRUNK ROAD NETWORK

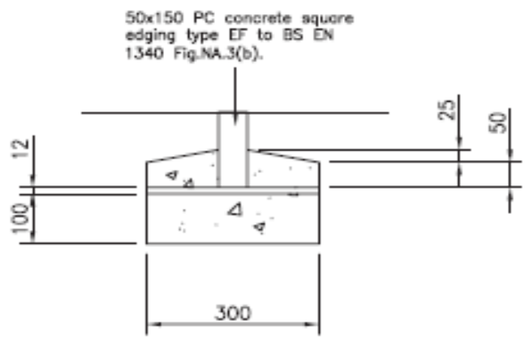

EDGING TYPE E1

Notes:

1. All dimensions in mm.
2. Edging to be to specification Clause 1101.
3. Foundation and backing to be mix ST1 to Clause 2602.
4. Mortar bedding to be to Clause 2601.

Title	EDGING TYPE E1
Scale	Not to scale
Drn	Date April 2005
Drawing Number 1100/01/118	Revision

Drawing: 1100/01/136-139 – Kerb Type Quadrants Q1 and Q2

TERM CONTRACT FOR MANAGEMENT AND MAINTENANCE OF THE SCOTTISH TRUNK ROAD NETWORK

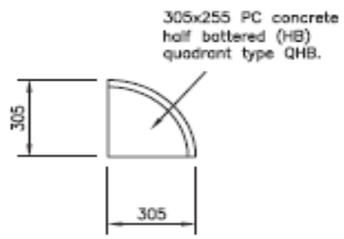

KERB TYPE Q1

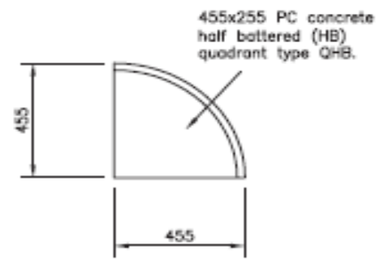

KERB TYPE Q2

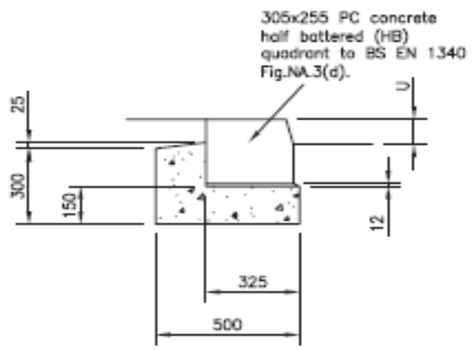

KERB TYPE Q1

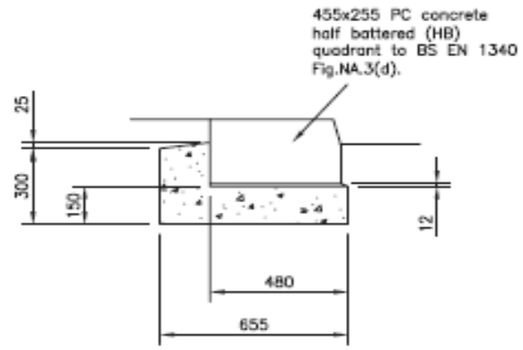

KERB TYPE Q2

Notes:

1. All dimensions in mm.
2. Kerbs to be to specification Clause 1101.
3. Kerb upstand to be 100mm unless stated otherwise in the contract.
4. Kerb foundation and backing to be mix ST1 to Clause 2602.
5. mortar bedding to be to Clause 2601.

Title	KERB TYPE QUADRANTS Q1 AND Q2
Scale	Not to scale
Drn	Date April 2005
Drawing Number 1100/01/136-139	Revision

Drawing: 1100/02/124-127 – Combined Kerb and Drainage System Types DK1 and DK2

TERM CONTRACT FOR MANAGEMENT AND MAINTENANCE OF THE SCOTTISH TRUNK ROAD NETWORK

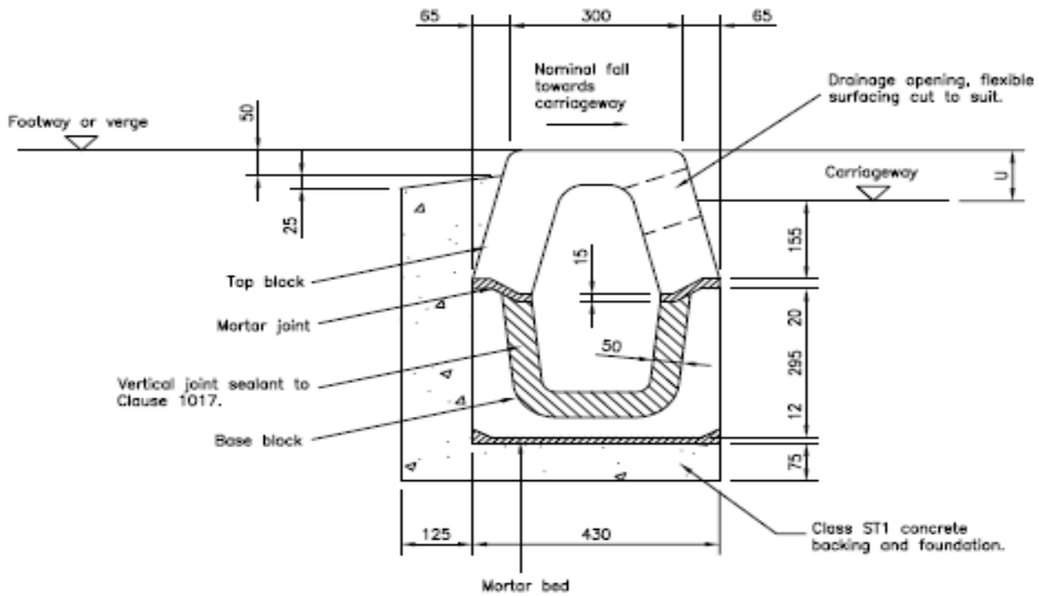

SECTION

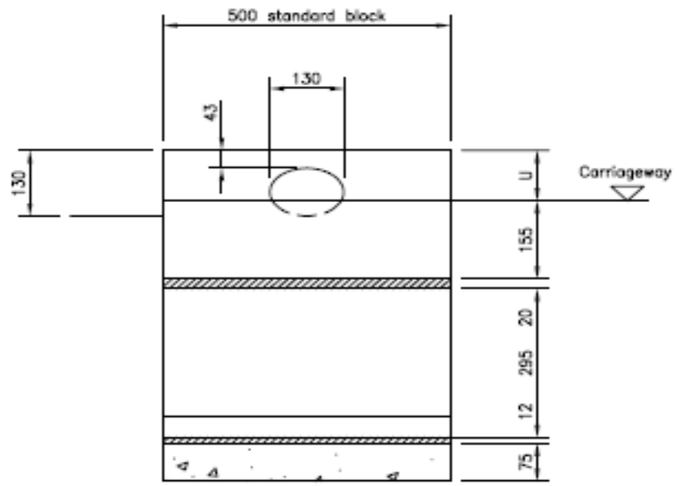

LONGITUDINAL ELEVATION

TOP AND BASE BLOCK TYPE DK1

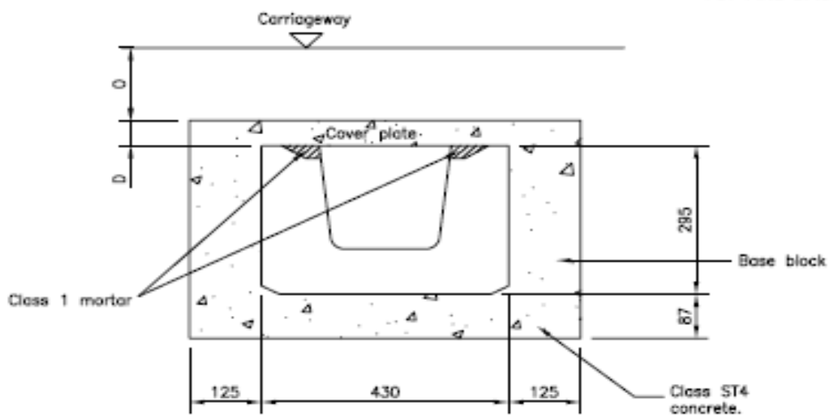

BASE BLOCK AND COVER PLATE TYPE DK2

Notes;

1. All dimensions in mm.
2. Combined kerb and drainage system to comply with specification Clause 516.
3. All blocks to be precast concrete as BEANY BLOCK system or equivalent.
4. To be installed in accordance with the manufacturers recommendations.
5. Foundations and backing to be Class ST1.
6. Cover plates to be 12.5m thick Grade 43A1 mild steel to BS EN 10025.
7. Cover plates to be galvanised.
8. Sealant to be to Clause 1017.
9. Kerb upstand U to be indicated in the contract.

Title	COMBINED KERB AND DRAINAGE SYSTEM TYPES DK1 AND DK2
Scale	Not to scale
Drn	Date April 2005
Drawing Number	1100/02/124-127
Revision	

Drawing: 1100/02/130 – Combined Kerb and Drainage System Types DK3

TERM CONTRACT FOR MANAGEMENT AND MAINTENANCE OF THE SCOTTISH TRUNK ROAD NETWORK

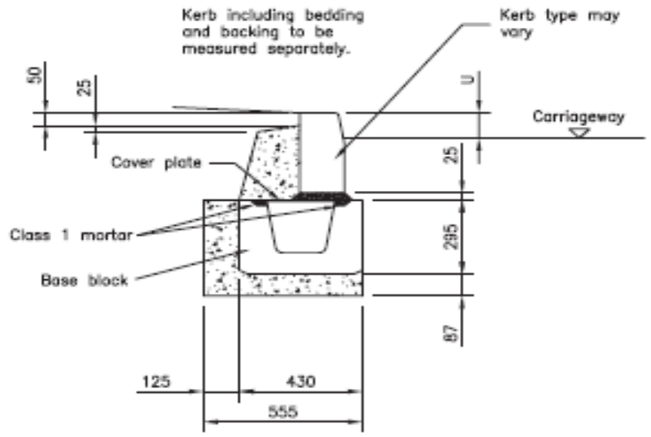

BASE BLOCK AND COVER PLATE TYPE DK3

Notes:

1. All dimensions in mm.
2. Combined kerb and drainage system to comply with specification Clause 516.
3. All blocks to be precast concrete as BEANY BLOCK system or equivalent.
4. To be installed in accordance with the Manufacturers recommendations.
5. Foundation and backing to be Grade ST1.
6. Cover plates to be 12.5mm thick Grade 43A1 mild steel to BS EN 10025.
7. Cover plates to be galvanised.
8. Sealant to be to Clause 1017.
9. Kerb upstand U to be indicated in the contract.

Title	COMBINED KERB AND DRAINAGE SYSTEM TYPE DK3
Scale	Not to scale
Drn	Date April 2005
Drawing Number 1100/02/130	Revision

Drawing: 1100/02/133 – Combined Kerb and Drainage System Outfall Types DK4

TERM CONTRACT FOR MANAGEMENT AND MAINTENANCE OF THE SCOTTISH TRUNK ROAD NETWORK

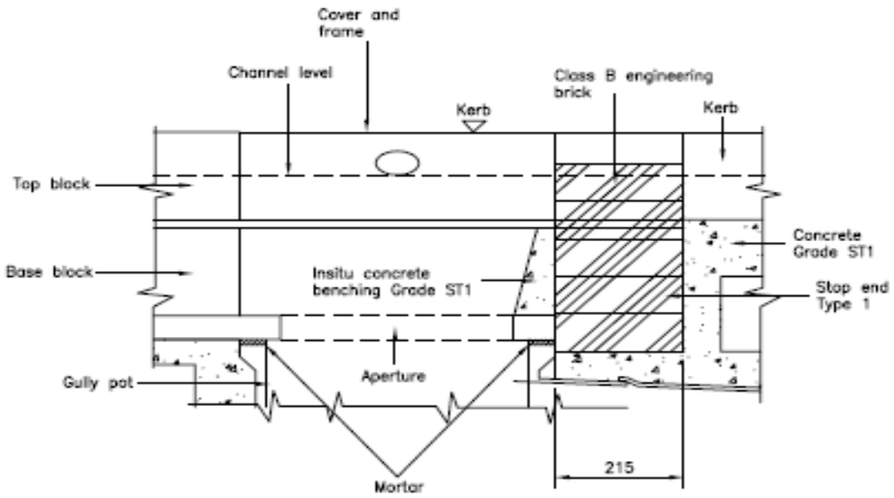

LONGITUDINAL SECTION

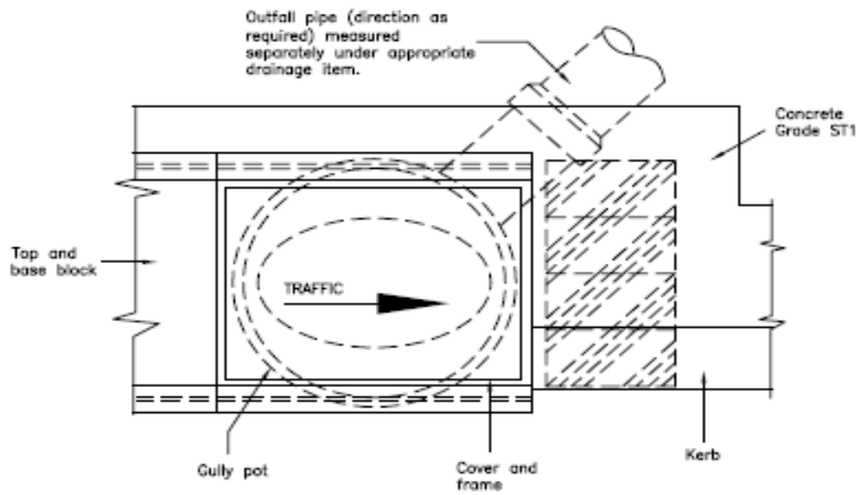

PLAN

OUTFALL TYPE DK4
STOP END TYPE 1

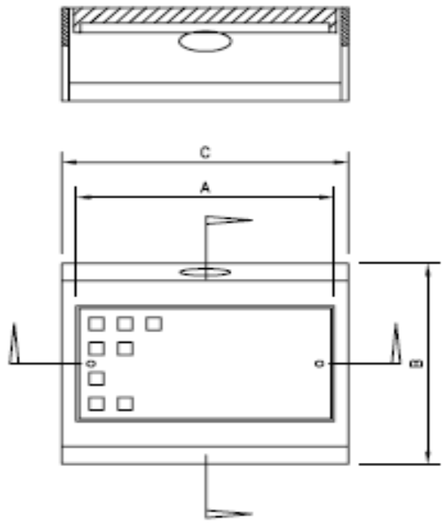

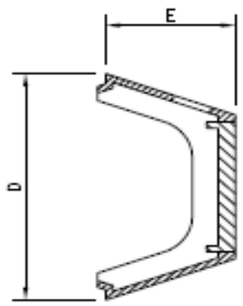

BS EN 124 TEST LOADING	Clear opening (AxB mm)	Overall dimensions (CxD mm)	Depth to seating (E mm)
Clause D	400x250	500x450	255

KERB TYPE COVER AND FRAME (AC1)

Notes:

1. All dimensions in mm.
2. Precast combined drainage and kerb blocks to comply with Clause 516.
3. Outfall Type 1J (of 1J) – as DF1 but with base block. Outfall – junction in lieu of base block outfall.
4. Outfall Type 2J (of 2J) – as DF2 but with base block. Outfall – junction in lieu of base block outfall.
5. Access cover Type 1J (AC1J) – as AC1 but with base block junction in lieu of base block.

Title
COMBINED KERB AND DRAINAGE SYSTEM OUTFALL TYPE DK4

Scale: Not to scale

Drn

Date: April 2005

Drawing Number: 1100/02/133

Revision

Drawing: 1100/05/001-010 – Footways, Footpaths, Paved Areas and Cycleways Types F1 to F4

TERM CONTRACT FOR MANAGEMENT AND MAINTENANCE OF THE SCOTTISH TRUNK ROAD NETWORK

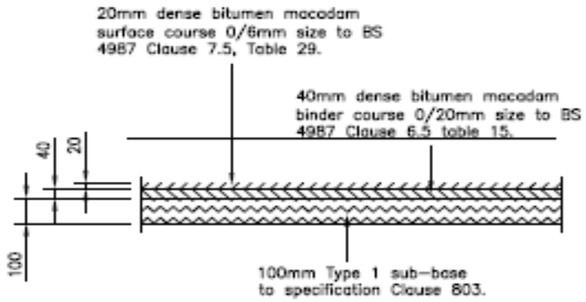

FLEXIBLE CONSTRUCTION : TYPE F1

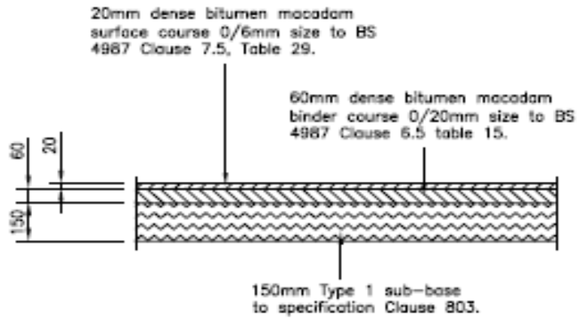

FLEXIBLE CONSTRUCTION : TYPE F2

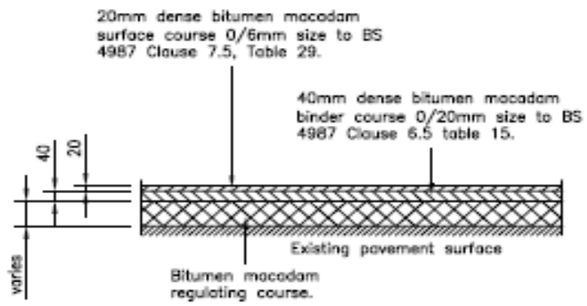

FLEXIBLE CONSTRUCTION : TYPE F3

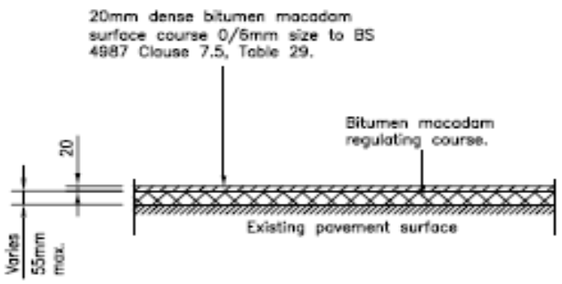

FLEXIBLE CONSTRUCTION : TYPE F4

Notes:

1. All dimensions in mm.
2. Regulating material shall be Type RC1 to RC4 in accordance with Appendix 7/1 schedule 5.

Title
FOOTWAYS, FOOTPATHS, PAVED AREAS AND CYCLEWAYS TYPES F1 TO F4

Scale	Not to scale
Drn	Date April 2005
Drawing Number 1100/05/001-010	Revision

Drawings: 1100/05/013-016 – Footways, Footpaths, Paved Areas and Cycleways Types F5 and F6

TERM CONTRACT FOR MANAGEMENT AND MAINTENANCE OF THE SCOTTISH TRUNK ROAD NETWORK

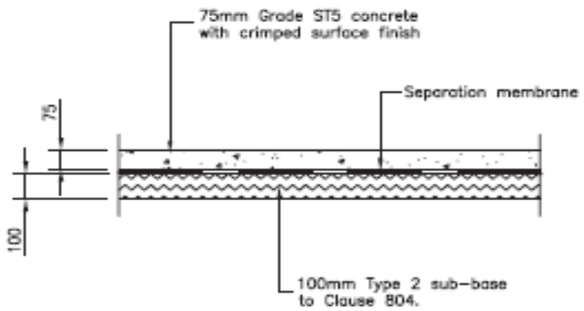

CONCRETE CONSTRUCTION : TYPE F5

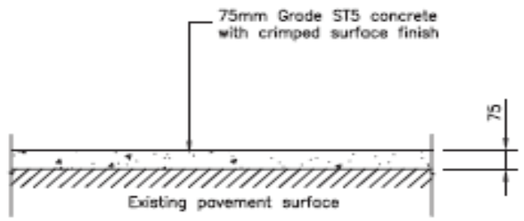

CONCRETE CONSTRUCTION : TYPE F6

Notes;

1. All dimensions in mm.

Title	FOOTWAYS, FOOTPATHS, PAVED AREAS AND CYCLEWAYS TYPES F5 AND F6
Scale	Not to scale
Drn	Date April 2005
Drawing Number	1100/05/013-016
Revision	

Drawing: 1100/05/019-028 – Footways, Footpaths, Paved Areas and Cycleways Types F7 to F10

TERM CONTRACT FOR MANAGEMENT AND MAINTENANCE OF THE SCOTTISH TRUNK ROAD NETWORK

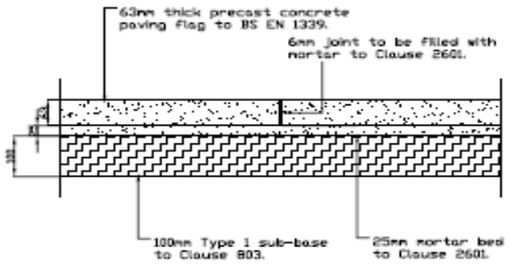

FLAGGED CONSTRUCTION: TYPE F7

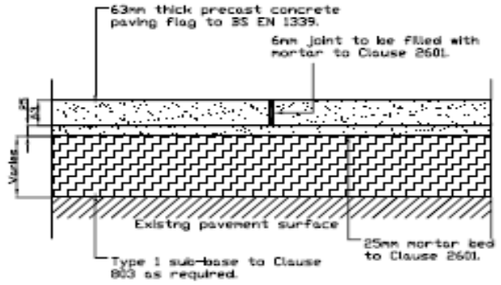

FLAGGED CONSTRUCTION: TYPE F8

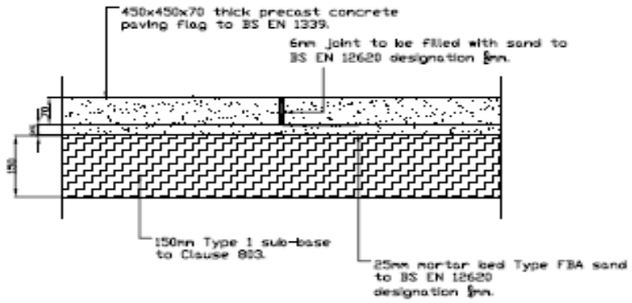

FLAGGED CONSTRUCTION: TYPE F9

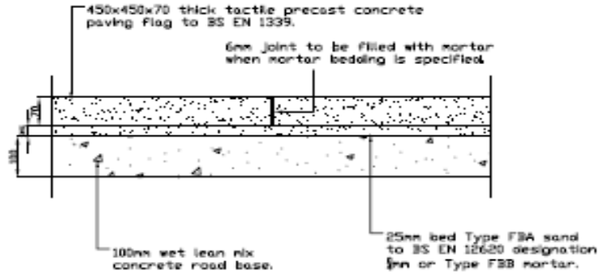

FLAGGED CONSTRUCTION: TYPE F10

TRANSPORT SCOTLAND

The Scottish Government

Notes:

1. All dimensions in mm.
2. Precast concrete flag paved footways, footpaths, paved areas and cycleways shall comply with the requirements of specification Clause 1104, 1173AR and 1174AR.

Drawing

FOOTWAYS, FOOTPATHS, PAVED AREAS AND CYCLEWAYS TYPES F7 TO F10

Drawn by: GS — Date: 10/1/09

Checked by: - — Date: -

Approved by: - — Date: -

Drawing No. 1100/05/019-028 — Revision -

Drawing Scale:

Drawing: 1100/05/031-040 – Footways, Footpaths, Paved Areas and Cycleways Types F11 to F14

TERM CONTRACT FOR MANAGEMENT AND MAINTENANCE OF THE SCOTTISH TRUNK ROAD NETWORK

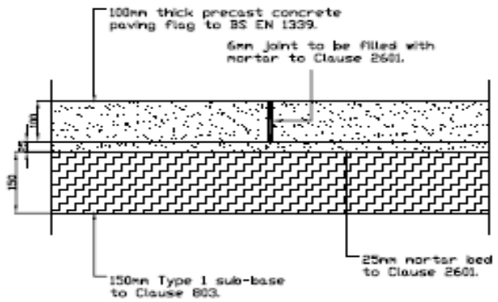

FLAGGED CONSTRUCTION: TYPE F11

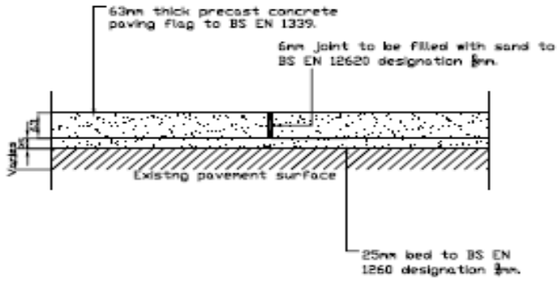

FLAGGED CONSTRUCTION: TYPE F12

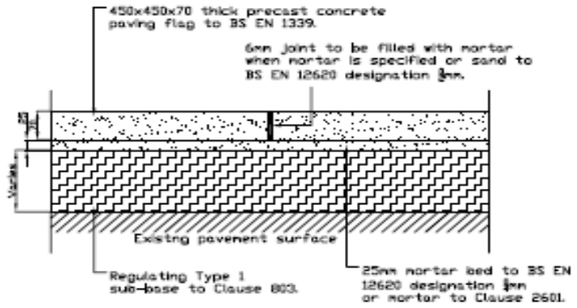

FLAGGED CONSTRUCTION: TYPE F13

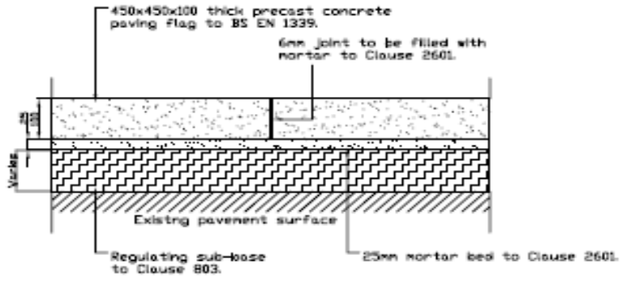

FLAGGED CONSTRUCTION: TYPE F14

TRANSPORT SCOTLAND

The Scottish Government

Notes:

1. All dimensions in mm.
2. Precast concrete flag paved footways, footpaths, paved areas and cycleways shall comply with the requirements of specification Clause 1104, 1173AR and 1174AR.

Drawing

FOOTWAYS, FOOTPATHS, PAVED AREAS AND CYCLEWAYS TYPES F11 TO F14

Drawn by: GS — Date: 10/1/09

Checked by: - — Date: -

Approved by: - — Date: -

Drawing No. 1100/05/031-040 — Revision: -

Drawing Scale:

Drawing: 1100/05/043-052 – Footways, Footpaths, Paved Areas and Cycleways Types F15 to F18

TERM CONTRACT FOR MANAGEMENT AND MAINTENANCE OF THE SCOTTISH TRUNK ROAD NETWORK

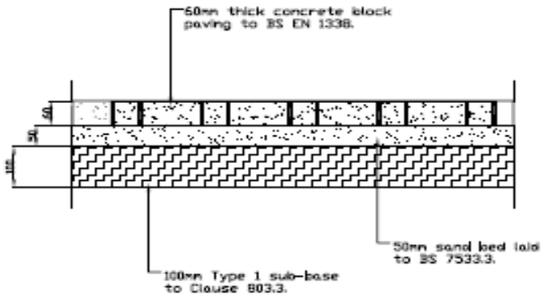

CONCRETE BLOCK CONSTRUCTION: TYPE F15

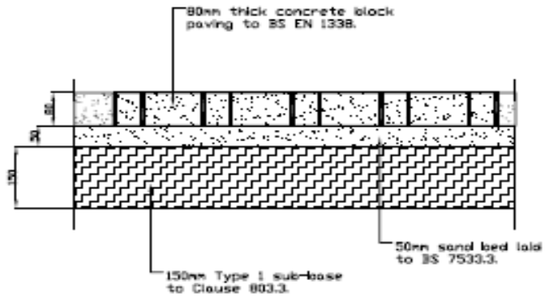

CONCRETE BLOCK CONSTRUCTION: TYPE F16

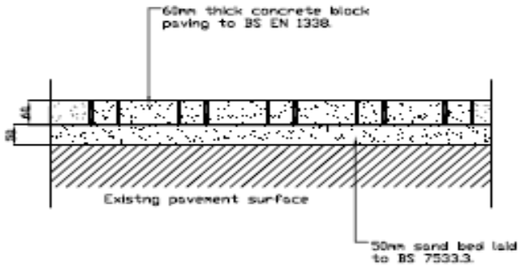

CONCRETE BLOCK CONSTRUCTION: TYPE F17

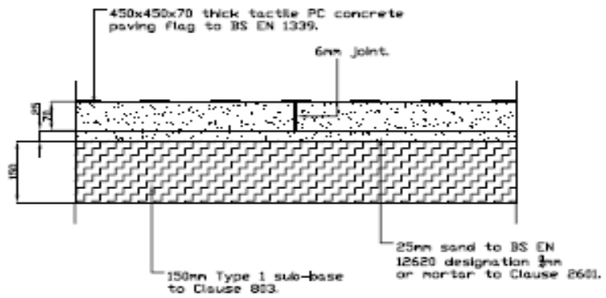

FLAGGED CONSTRUCTION: TYPE F18

TRANSPORT SCOTLAND

an agency of The Scottish Government

Notes:

1. All dimensions in mm.
2. Concrete block paved footways, footpaths, paved areas and cycleways shall comply with the requirements of specification Clause 1104, 1173AR and 1107.
3. Tactile PC concrete paving shall comply with the requirements of Clause 1104, 1173AR and 1174AR.

Drawing

FOOTWAYS, FOOTPATHS, PAVED AREAS AND CYCLEWAYS TYPES F15 TO F18

Drawn by: GS — Date: 10/1/09
Checked by: - — Date: -
Approved by: - — Date: -
Drawing No. 1100/05/043-052 — Revision -
Drawing Scale:

Drawing: 1100/05/055-064 – Footways, Footpaths, Paved Areas and Cycleways Types F19 to F22

TERM CONTRACT FOR MANAGEMENT AND MAINTENANCE OF THE SCOTTISH TRUNK ROAD NETWORK

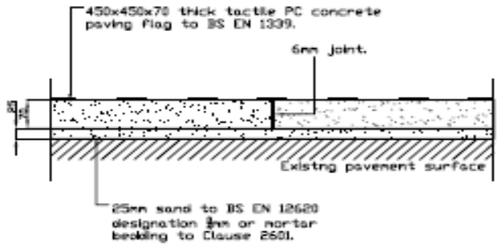

FLAGGED CONSTRUCTION: TYPE F19

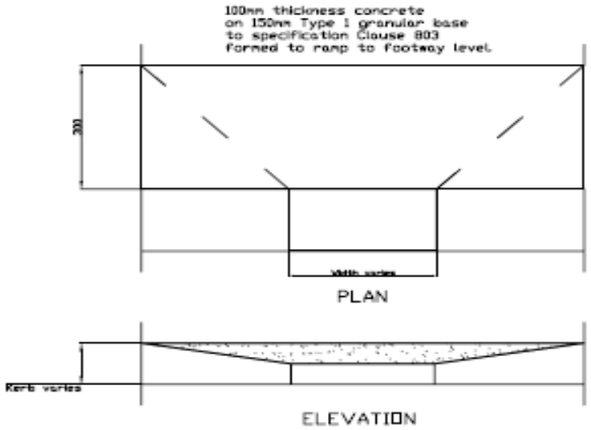

FOOTWAY CONSTRUCTION: TYPE F20

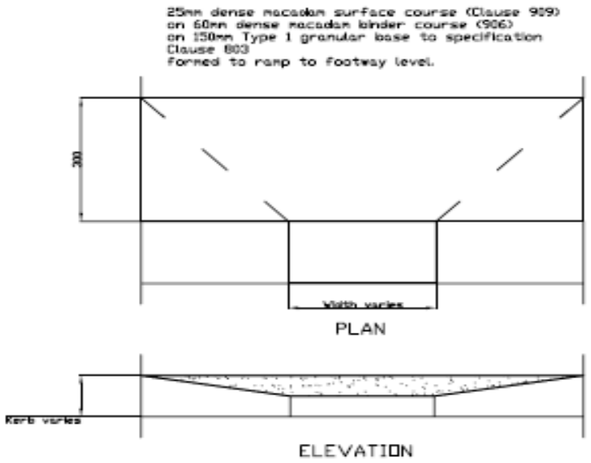

FOOTWAY CONSTRUCTION: TYPE F21

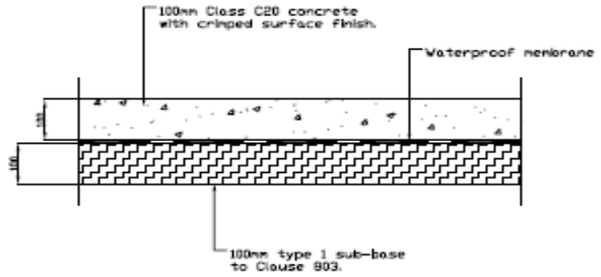

CONCRETE CONSTRUCTION: TYPE F22

TRANSPORT SCOTLAND

An agency of The Scottish Government

Notes:

1. All dimensions in mm.
2. Concrete block paved footways, footpaths, paved areas and cycleways shall comply with the requirements of specification Clause 1104, 1173AR and 1107.
3. Tactile PC concrete paving shall comply with the requirements of Clause 1104, 1173AR and 1174AR.

Drawing

FOOTWAYS, FOOTPATHS, PAVED AREAS AND CYCLEWAYS TYPES F19 TO F22

Drawn by: GS — Date: 10/11/09

Checked by: - — Date: -

Approved by: - — Date: -

Drawing No. 1100/05/055-064 — Revision: -

Drawing Scale:

Drawing: 1100/05/067-073 – Footways, Footpaths, Paved Areas and Cycleways Types F23 to F25

TERM CONTRACT FOR MANAGEMENT AND MAINTENANCE OF THE SCOTTISH TRUNK ROAD NETWORK

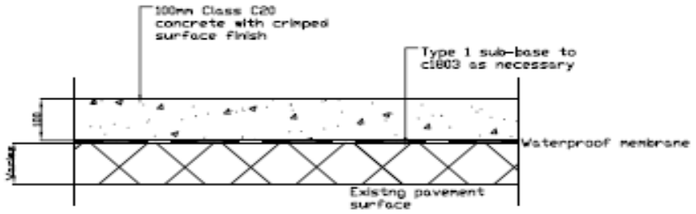

CONCRETE CONSTRUCTION: TYPE F23

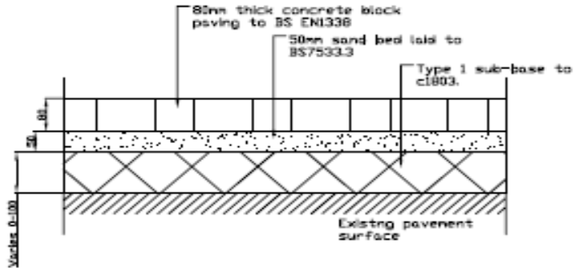

CONCRETE BLOCK CONSTRUCTION: TYPE F24

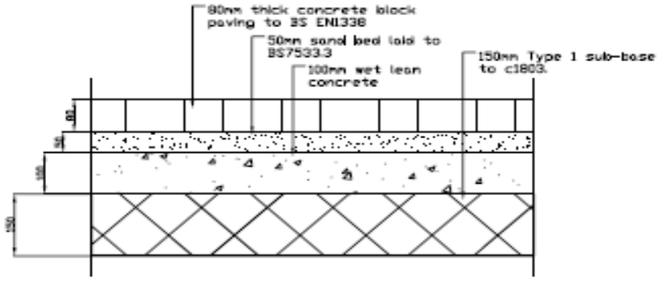

CONCRETE BLOCK CONSTRUCTION: TYPE F25

TRANSPORT SCOTLAND

The Scottish Government

Notes:

1. All dimensions in mm.
2. Concrete block paved footways, footpaths, paved areas and cycleways shall comply with the requirements of specification Clause 1104, 1173AR and 1107.
3. Tactile PC concrete paving shall comply with the requirements of Clause 1104, 1173AR and 1174AR.

Drawing

FOOTWAYS, FOOTPATHS, PAVED AREAS AND CYCLEWAYS TYPES F23 TO F25

Drawn by: GS — Date: 10/1/09
Checked by: - — Date: -
Approved by: - — Date: -
Drawing No. 1100/05/067-073 — Revision -
Drawing Scale:

Drawing: 1100/05/085 & 088 – Recessed Gullies GS1 and GS2 with Kerb Surround

TERM CONTRACT FOR MANAGEMENT AND MAINTENANCE OF THE SCOTTISH TRUNK ROAD NETWORK

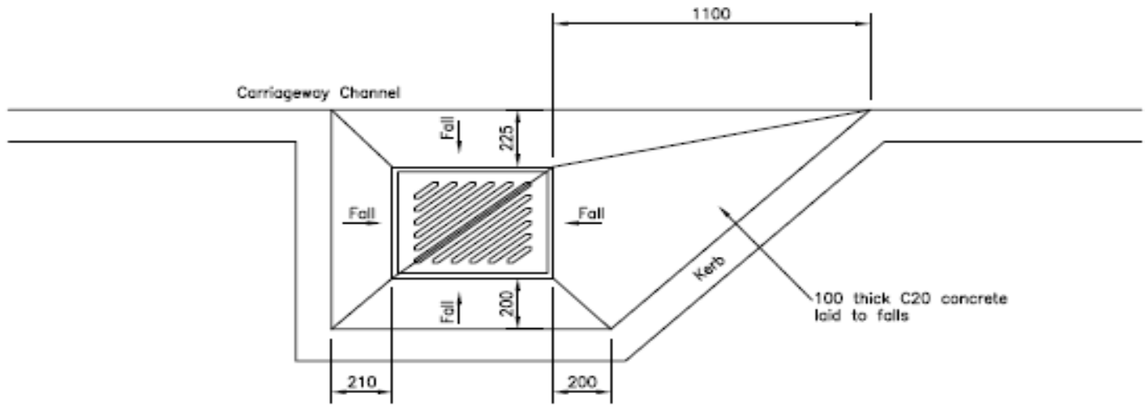

TYPE GS1 SINGLE SPLAY ENTRY
RECESSED GULLY WITH KERB SURROUND

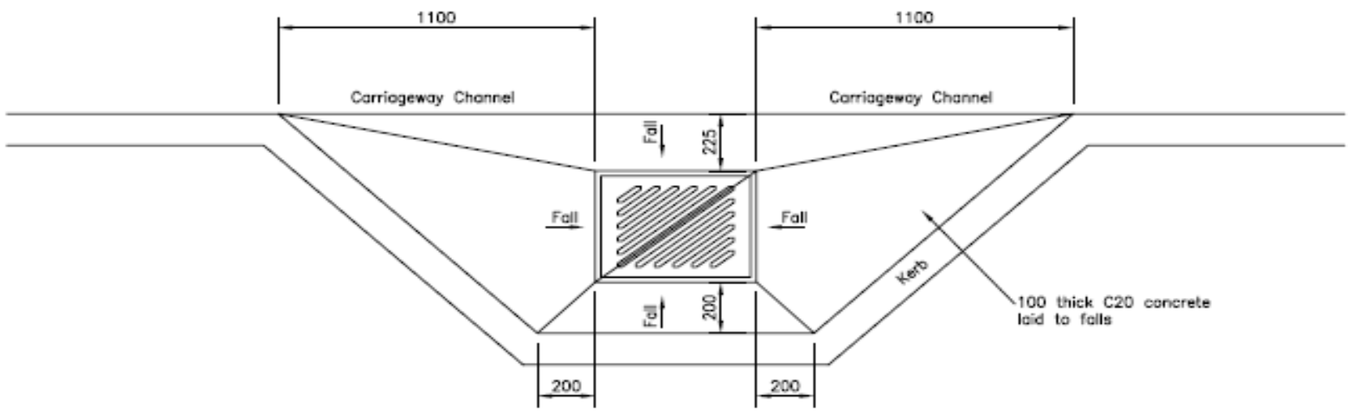

TYPE GS2 DOUBLE SPLAY ENTRY
RECESSED GULLY WITH KERB SURROUND

Notes:

1. All dimensions in mm.
2. Gullies to comply with Drawing No. 500/5/169–178

Title
RECESSED GULLIES
GS1 AND GS2 WITH
KERB SURROUND

Scale	Not to scale
Drn	Date April 2005
Drawing Number 1100/05/085 & 088	Revision

Drawing: 1200/07/001 – Precast Concrete Bollard Type B1

TERM CONTRACT FOR MANAGEMENT AND MAINTENANCE OF THE SCOTTISH TRUNK ROAD NETWORK

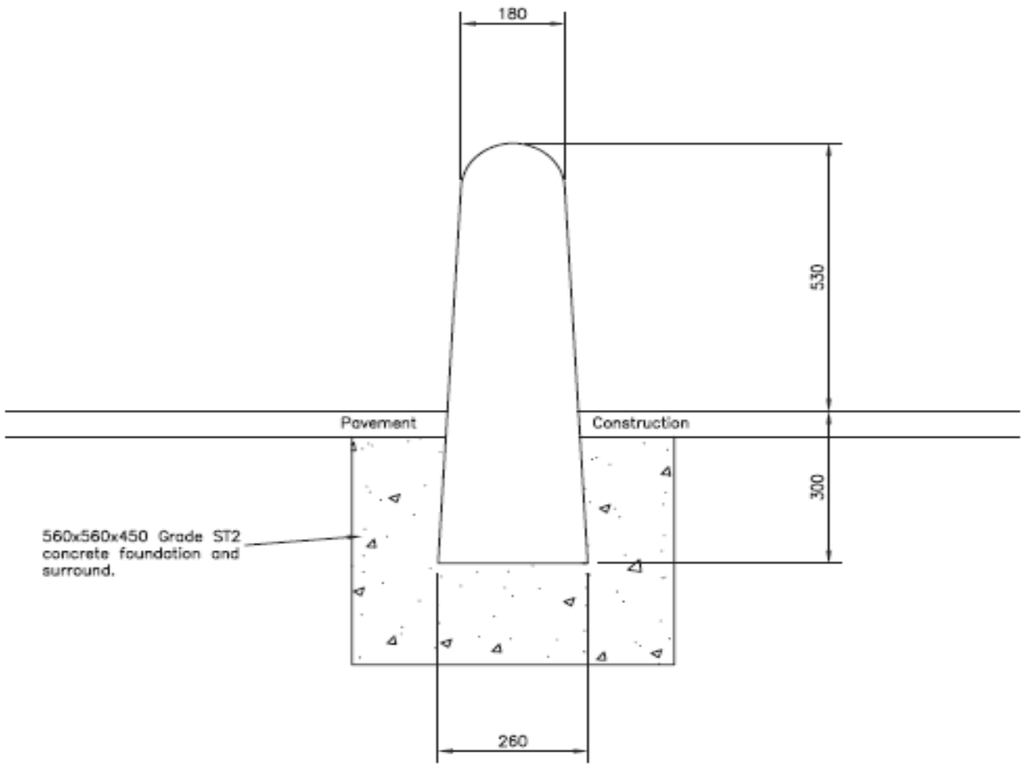

Notes:

1. All dimensions in mm.

Title

PRECAST CONCRETE BOLLARD TYPE B1

Scale	Not to scale
Drn	Date April 2005
Drawing Number 1200/07/001	Revision

Drawing: 1200/08/001 - Verge hazard marker posts Type VM1

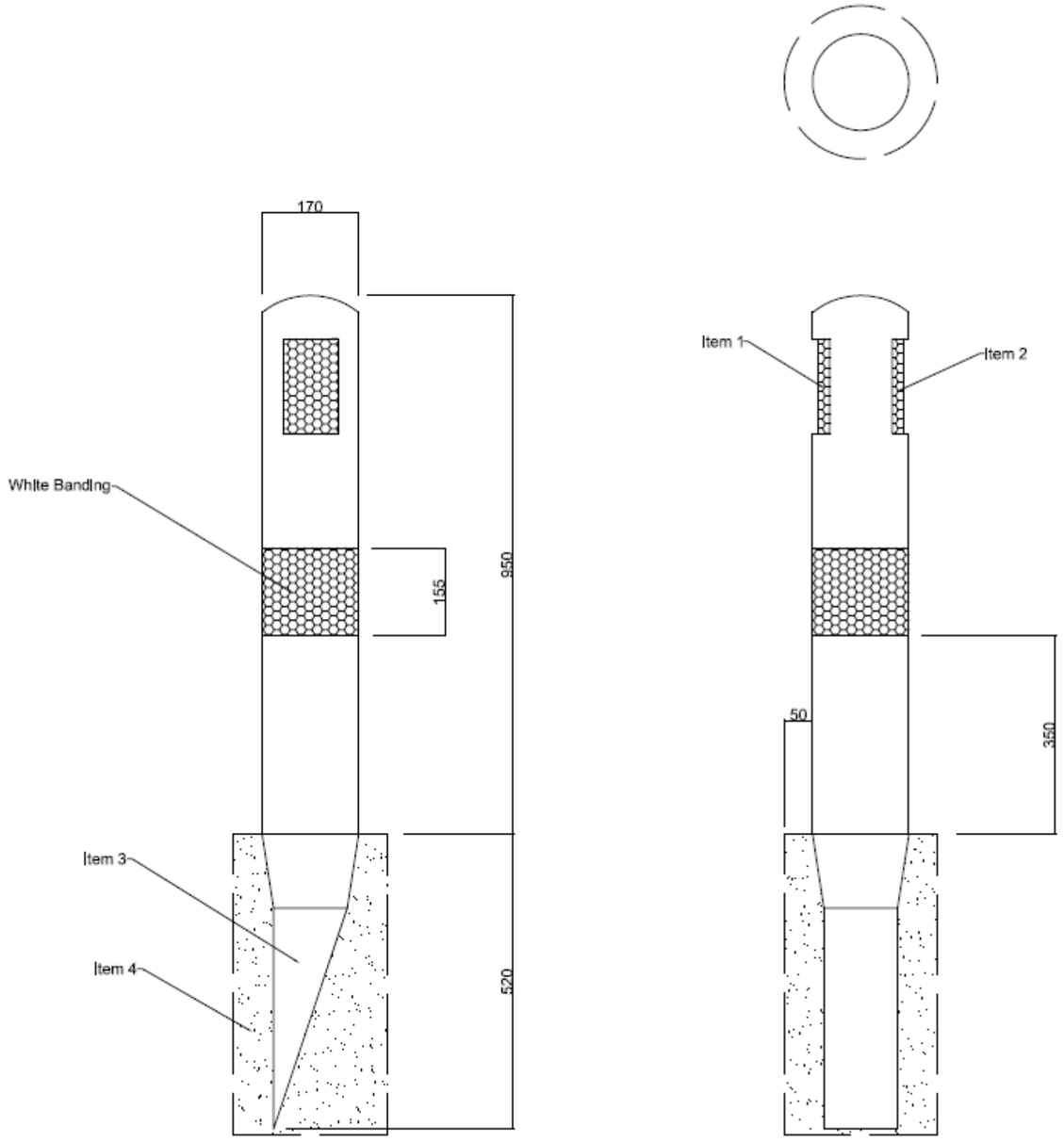

Verge hazard marker post Type VM1

1. All dimensions in mm unless stated otherwise.
2. The edge of carriageway marker shall be installed in accordance with the manufacture's written instructions.
3. Verge hazard marker posts shall be constructed of material resistant to damage and vandalism and maintenance free.
4. The post shall have a stake type fixing which shall include a timber pressure impregnated stake and automatic locking mechanism.
5. The posts shall have two integrally moulded shatter proof reflectors angled to give maximum visibility to traffic travelling from either direction on bends.
6. The posts shall have a high visibility band integrally moulded into its body with a minimum of 155mm.
7. Item 1 – Reflector (red)
8. Item 2 – Reflector (white)
9. Item 3 – Timber stake.
10. Item 4 – Subsoil

Drawing Ref – 1200/08/001

Drawing: 1200/08/002 - Verge hazard marker posts Type VM2A and VM2B

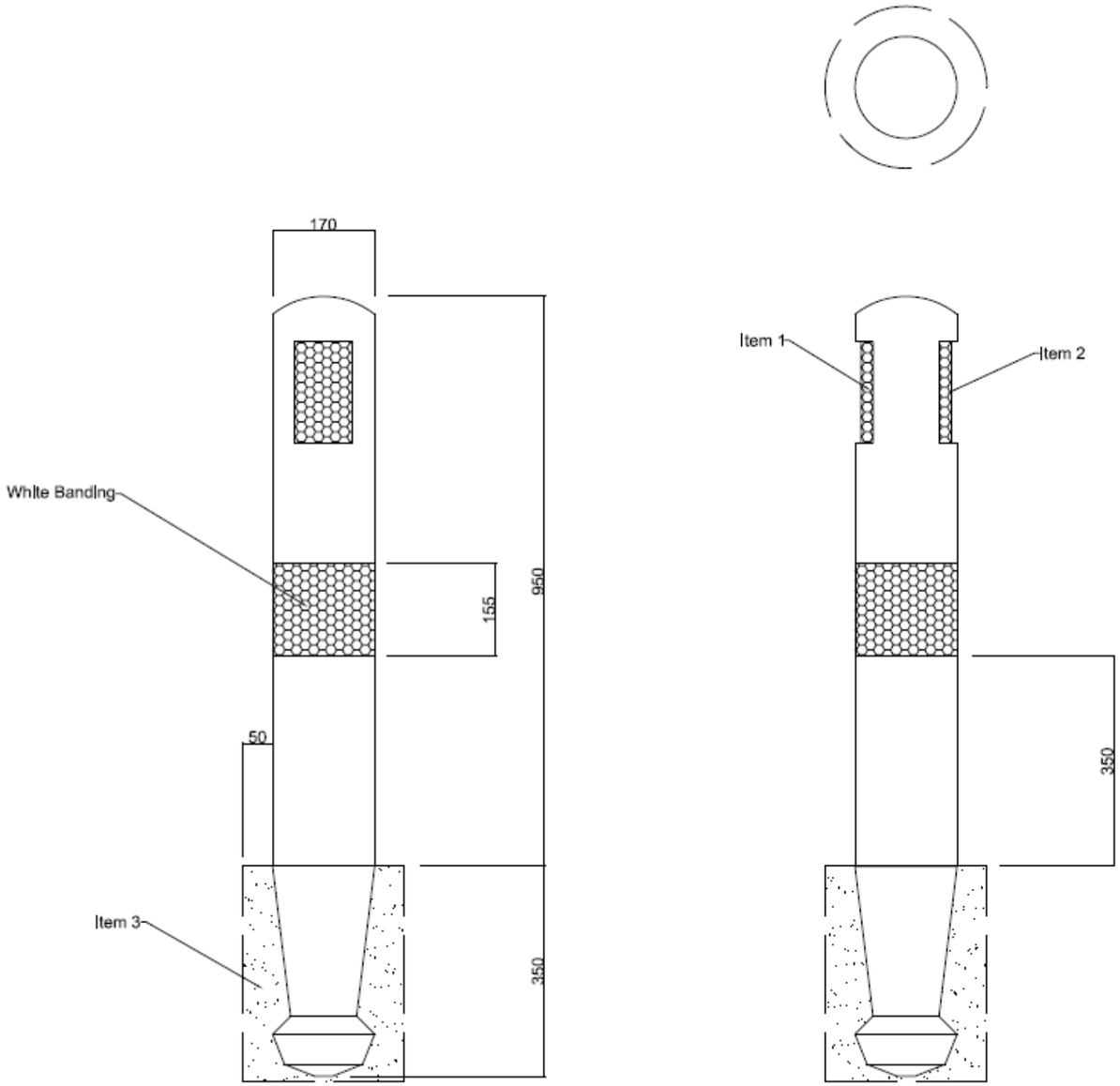

Verge hazard marker post
Type VM2A and VM2B

1. All dimensions in mm unless stated otherwise.
2. The edge of carriageway marker shall be installed in accordance with the manufacture's written instructions.
3. Verge hazard marker posts shall be constructed of material resistant to damage and vandalism and maintenance free.
4. The posts shall have two integrally moulded shatter proof reflectors angled to give maximum visibility to traffic travelling from either direction on bends.
5. The posts shall have a high visibility band integrally moulded into its body with a minimum of 155mm.
6. Item 1 – Reflector (red)
7. Item 2 – Reflector (white)
8. Item 3 – Concrete (ST2) or excavated material.

Drawing Ref – 1200/08/002

Drawing: 1200/09/001 – Edge of Carriageway Hazard Markers Type ECB1

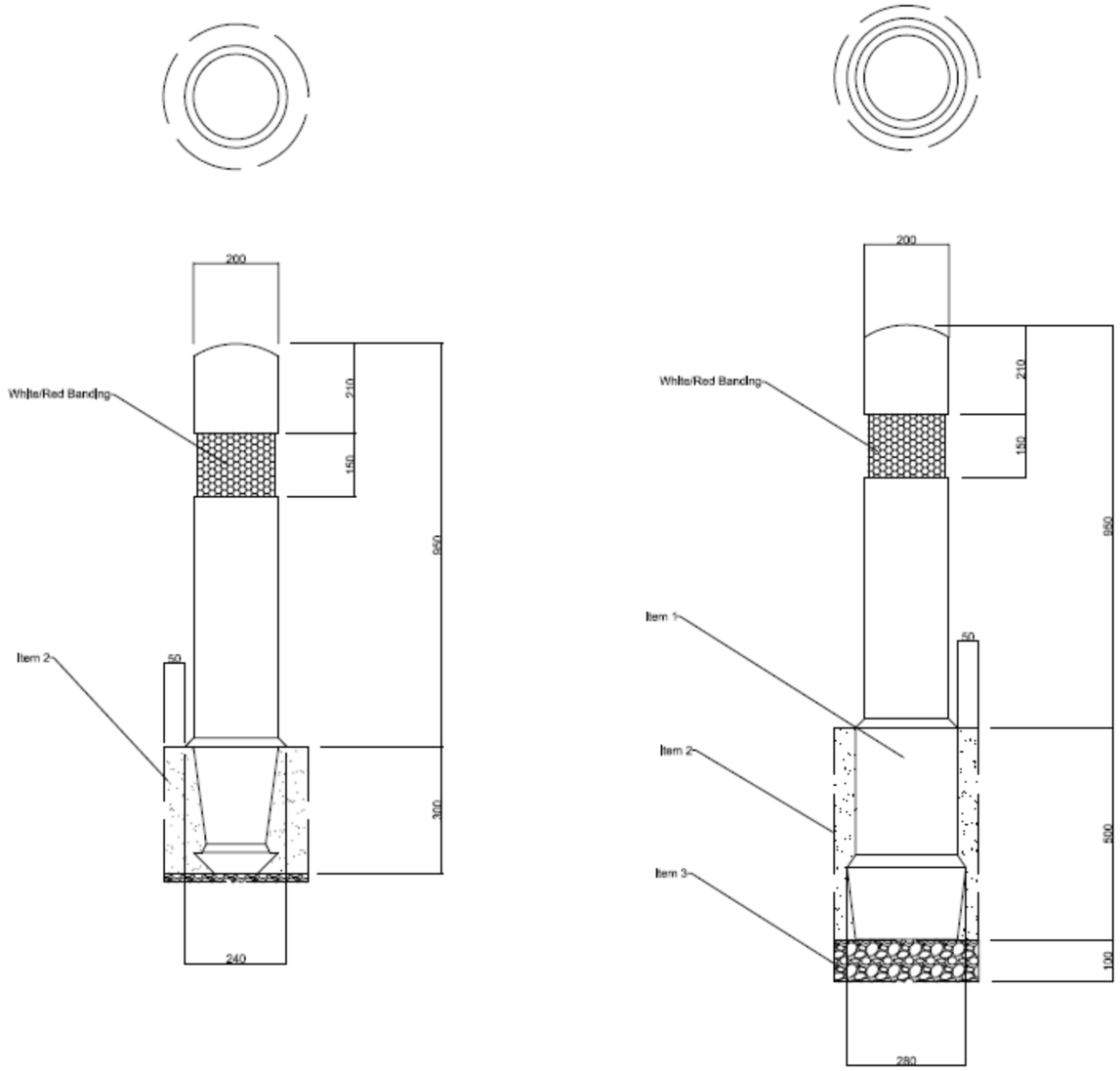

Edge of Carriageway Hazard Markers – Type ECB1

1. All dimensions in mm unless stated otherwise.
2. The edge of carriageway marker shall be installed in accordance with the manufacture's written instructions.
3. Verge hazard marker posts shall be constructed of material resistant to damage and vandalism and maintenance free.
4. A 150mm retro–reflextive red and white band shall be attached to the marker.
5. Item 1 – Permanent ground socket
6. Item 2 – Concrete (ST2)
7. Item 3 – Gravel

Drawing ref – 1200–09–001

Drawing: 1200/10/1 – Details for Sign Post Foundation Sheet 1 of 2

TERM CONTRACT FOR MANAGEMENT AND MAINTENANCE OF THE SCOTTISH TRUNK ROAD NETWORK

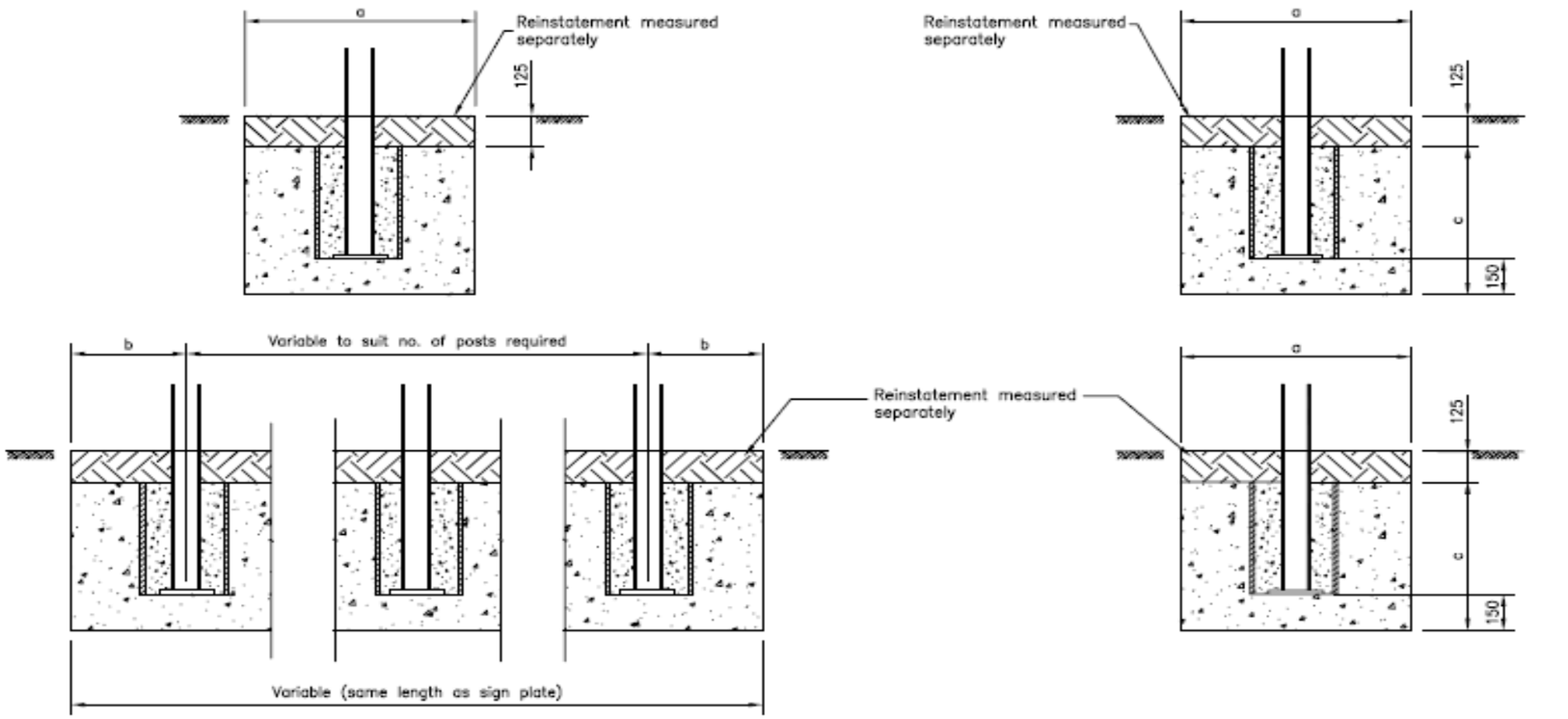

For Post Diameter	76mm	83–102mm	114–140mm	163–194mm
'a'	610	830	990	1525
'b'	305	415	495	765
'c'	460	610	915	915

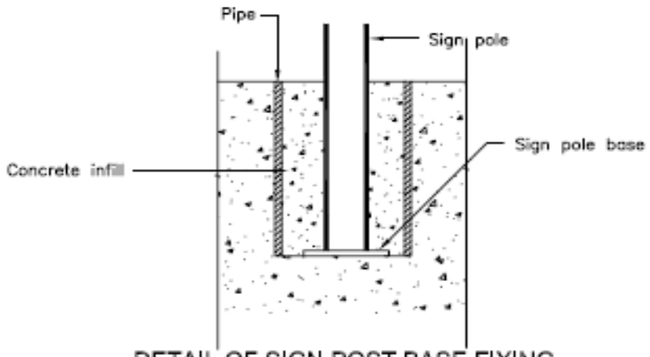

DETAIL OF SIGN POST BASE FIXING

Notes;

1. To be read in conjunction with series 1200.
2. Concrete to be to Clause 2602 mix to be ST5.
3. The size, number and materials for columns is to be in accordance with chapter 13 of the Traffic Signs Manual.
4. For signs erected in grass verges, concrete foundations are to be brought up to ground level as indicated on Sheet 2.

Title
DETAILS FOR SIGN POST FOUNDATION SHEET 1 OF 2

Scale: Not to scale

Drn

Date: April 2005

Drawing Number: 1200/10/1

Revision

Drawing: 1200/10/2 – Details for Sign Post Foundation Sheet 2 of 2

TERM CONTRACT FOR MANAGEMENT AND MAINTENANCE OF THE SCOTTISH TRUNK ROAD NETWORK

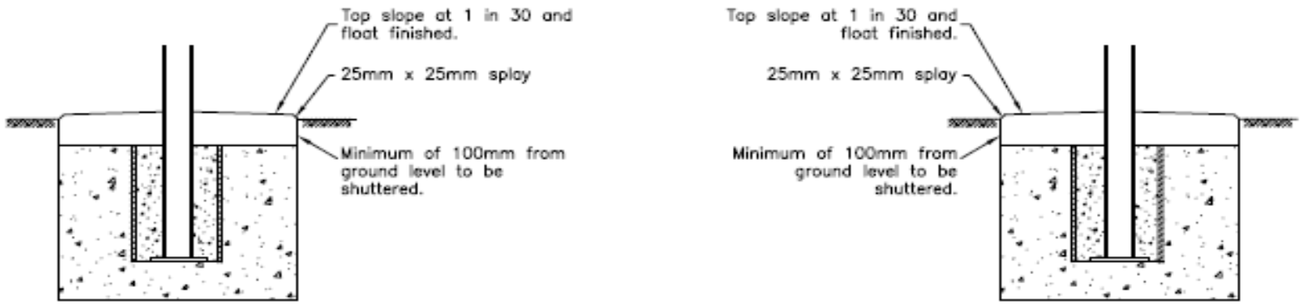

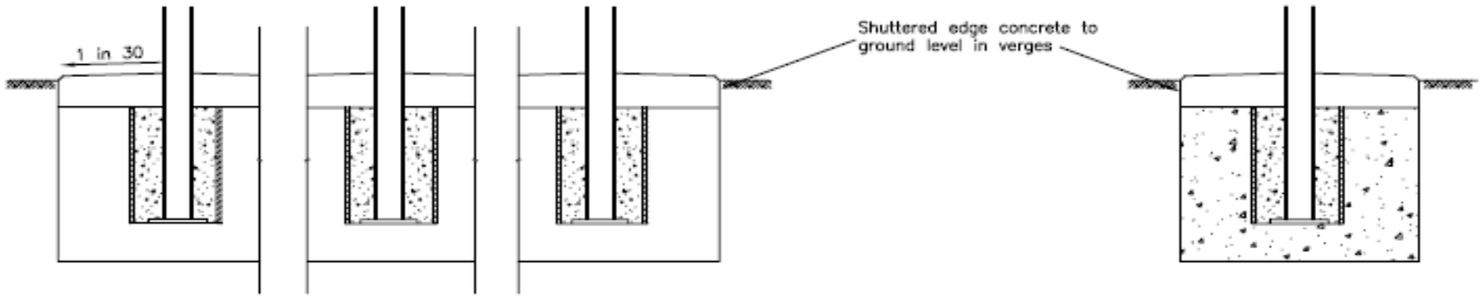

MOWING STRIP DETAIL FOR SIGNS IN GRASSED AREAS
(SEE DETAIL 12/1(1) FOR DIMENSIONS Etc.)

Notes:

1. To be read in conjunction with series 1200.
2. Concrete to be to cl2602 mix to be ST5.

Title	DETAILS FOR SIGN POST FOUNDATION SHEET 2 OF 2
Scale	Not to scale
Drn	Date April 2005
Drawing Number 1200/10/2	Revision

Drawing: MCX 0138 (Modified) – Typical Access Steps

TERM CONTRACT FOR MANAGEMENT AND MAINTENANCE OF THE SCOTTISH TRUNK ROAD NETWORK

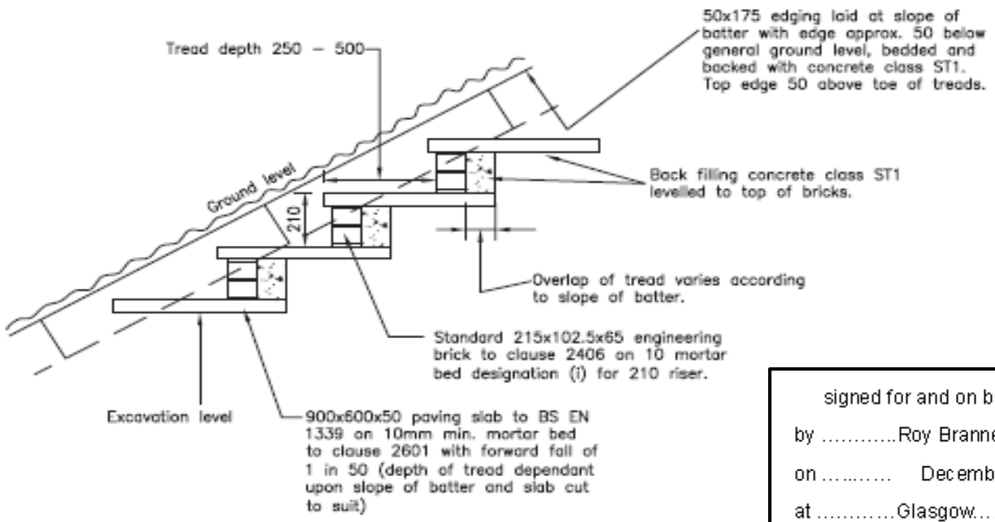

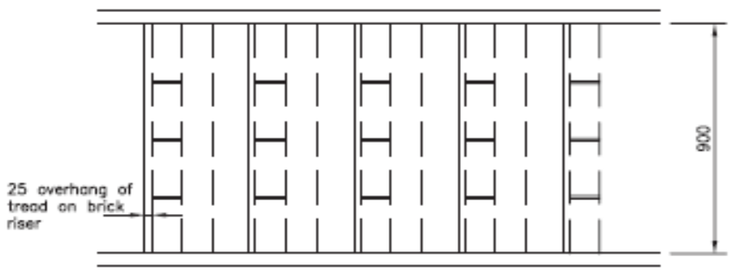

PLAN

signed for and on behalf of The Scottish Ministers

by .....Roy Brannen.....

on ..... December 2014..... .....

at .....Glasgow..... Authorised Signatory

signed for and on behalf of AMEY LG Limited

by .....

on ..... December 2014..... .....

at .....Glasgow..... Director/Company Secretary/ Authorised Signatory*

Notes:

1. Steps to be provided on all gradients more than 600 in height where cabinets 600 are provided.
2. This drawing shows the construction detail required for steps. The Operating Company shall provide drawings of step details for gradients where this standard detail is inappropriate.
3. Classes & grades of materials shall comply with the Specification for Highway Works.

Title

INSTALLATION DRAWING
NMGS 1&2
TYPICAL ACCESS STEPS

Scale: Not to scale

Drn

Date: April 2005

Drawing Number: MCX0138(modified)

Revision